brother

Brother Laser MFC

SERVICE MANUAL

MODEL:

DCP-7080/7080D/7180DN
DCP-L2500D/L2520D/L2520DW
DCP-L2540DN/L2540DW/L2541DW/L2560DW
HL-L2380DW
MFC-7380/7480D/7880DN
MFC-L2680W/L2685DW/L2700D/L2700DN/L2700DW MFC-L2701D/L2701DW/L2703DW/L2705DW MFC-L2707DW/L2720DW/L2740DW

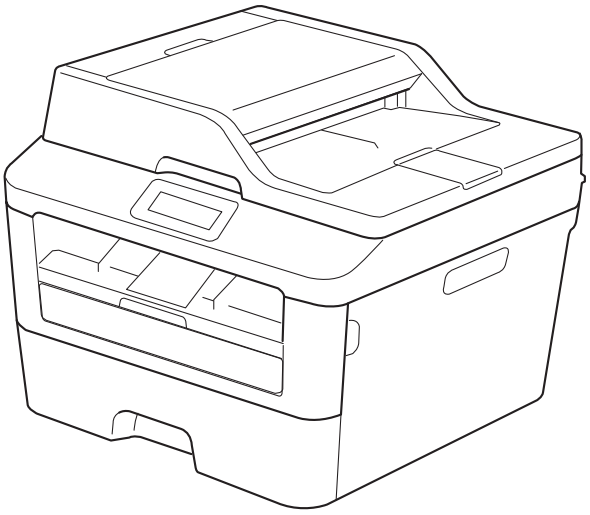

Read this manual thoroughly before maintenance work.
Keep this manual in a convenient place for quick and easy reference at all times.

May 2014
SM-FAX160
8C5H*
(5)

Confidential

Trademarks

Brother is a trademark of Brother Industries, Ltd.

Microsoft, Windows, Windows NT, Windows Vista, Windows Server, Internet Explorer and Outlook are either registered trademarks or trademarks of Microsoft Corporation in the United States and/or other countries.

Apple, Macintosh, Mac OS, iPad, iPhone, iOS, iPod touch and OS X are trademarks of Apple Inc., registered in the United States and other countries.

AirPrint is a trademark of Apple Inc.

Linux is the registered trademark of Linus Torvalds in the U.S. and other countries.

UNIX is a registered trademark of The Open Group in the United States and other countries.

Intel is trademark of Intel Corporation in the U.S. and/or other countries.

Adobe, Illustrator, PostScript, and PostScript 3 are either registered trademarks or trademarks of Adobe Systems Incorporated in the United States and/or other countries.

Wi-Fi, Wi-Fi Alliance and Wi-Fi Protected Access are registered trademarks of the Wi-Fi Alliance.

WPA, WPA2, Wi-Fi Protected Setup log and Wi-Fi Direct are trademarks of the Wi-Fi Alliance.

FLICKR is a registered trademark of Yahoo! Inc.

AOSS is a trademark of Buffalo Inc.

Android, Google Cloud Print, Google Drive, Google Play and Picasa Web Albums are trademarks of Google Inc. Use of this trademark is subject to Google Permissions.

Nuance, the Nuance logo, PaperPort and ScanSoft are trademarks or registered trademarks of Nuance Communications, Inc. or its affiliates in the United States and/or other countries.

Mozilla and Firefox are a registered trademark of the Mozilla Foundation.

EVERNOTE is a trademark of Evernote Corporation and used under a license.

Each company whose software title is mentioned in this manual has a Software License Agreement specific to its proprietary programs.

Any trade names and product names of companies appearing on Brother products, related documents and any other materials are all trademarks or registered trademarks of those respective companies.

Open Source Licensing Remarks

This product includes open-source software.

Please visit the Brother Solutions Center at http://solutions.brother.com/ to view the Open Source Licensing Remarks and Copyright information.

Copyright and License

©2014 Brother Industries, Ltd. All rights reserved.

This product includes software developed by the following vendors:

©1983-1998 PACIFIC SOFTWORKS, INC. ALL RIGHTS RESERVED.

©2008 Devicescape Software, Inc. All rights reserved.

This product includes the “KASAGO TCP/IP” software developed by ZUKEN ELMIC, Inc.

Other Information

FlashFX® is a registered trademark of Datalight, Inc.

FlashFX® Copyright 1998-2010 Datalight, Inc.

U.S.Patent Office 5,860,082/6,260,156

FlashFX® Pro™ is a trademark of Datalight, Inc.

Reliance™ is a trademark of Datalight, Inc.

Datalight® is a registered trademark of Datalight, Inc.

Copyright 1989-2010 Datalight, Inc., All Rights Reserved

CONTENTS

SAFETY INFORMATION vii

CHAPTER 1 SUPPLEMENTAL SPECIFICATIONS

1. GENERAL 1-1
2. NETWORK CONNECTIVITY 1-5
3. SERVICE INFORMATION 1-6
4. SUPPLIES 1-7
5. MEDIA SPECIFICATIONS 1-9
6. FAX (ONLY FOR THE MODELS WITH FAX FUNCTION) 1-9
7. COPY 1-10
8. SCANNER 1-11

CHAPTER 2 ERROR INDICATIONS & TROUBLESHOOTING

1. INTRODUCTION 2-1
   - 1.1 Precautions 2-1
   - 1.2 Checks before Commencing Troubleshooting 2-2
2. OVERVIEW 2-4
   - 2.1 Cross-section Drawing 2-4
     - 2.1.1 Printer part 2-4
     - 2.1.2 Scanner part 2-5
   - 2.2 Paper Feeding 2-6
     - 2.2.1 Printer part 2-6
     - 2.2.2 Scanner part 2-7
   - 2.3 Operation of Each Part 2-8
   - 2.4 Block Diagram 2-9
   - 2.5 Main Components 2-10
3. ERROR INDICATIONS 2-11
   - 3.1 Error Codes 2-11
   - 3.2 Error Messages 2-19
     - 3.2.1 2-line display LCD models 2-19
     - 3.2.2 Touch panel models 2-23
   - 3.3 Communication Errors 2-27
4. TROUBLESHOOTING 2-31
   - 4.1 Error Cause and Remedy 2-31

4.2 Troubleshooting for Paper Feeding Problems 2-58
4.2.1 No paper is fed from paper tray 2-58
4.2.2 No paper is fed from manual feed slot 2-59
4.2.3 Multiple sheets of paper are fed 2-59
4.2.4 Paper becomes wrinkled 2-60
4.2.5 Paper is fed at an angle 2-60
4.2.6 Paper is curled 2-61
4.2.7 Duplex printing is not possible 2-61
4.2.8 Paper jam 2-62
4.3 Troubleshooting for Image Defects 2-66
4.3.1 Image defect examples 2-66
4.3.2 Troubleshooting according to image defect 2-67
4.4 Troubleshooting for Software Problems 2-78
4.4.1 Cannot receive data 2-78
4.5 Troubleshooting for Network Problems 2-79
4.5.1 Cannot print via network connection 2-79
4.5.2 Cannot connect to access point 2-79
4.6 Troubleshooting for Control Panel Problems 2-80
4.6.1 Nothing is displayed on the LCD 2-80
4.6.2 Nothing is displayed on the LED 2-80
4.6.3 Control panel is inoperable 2-81
4.6.4 Machine is not in standard mode when it is turned ON 2-81
4.7 Troubleshooting for Toner and Drum Problems 2-82
4.7.1 New toner is not detected 2-82
4.7.2 Toner cartridge cannot be recognized 2-82
4.7.3 Error message prompting toner cartridge replacement does not disappear 2-82
4.7.4 Drum error 2-83
4.7.5 Error message prompting drum replacement does not disappear 2-83
4.8 Troubleshooting for Fuser Unit Problems 2-84
4.8.1 Fuser unit failure 2-84
4.9 Troubleshooting for Laser Unit Problems 2-84
4.9.1 Laser unit failure 2-84
4.10 Troubleshooting for PCB Problems 2-85
4.10.1 Main PCB failure 2-85
4.10.2 Memory full 2-85
4.10.3 Print limit / ID authentification error 2-85
4.11 Troubleshooting for Document Feeding Problems 2-86
4.11.1 No document is fed 2-86
4.11.2 Multiple documents are fed 2-86
4.11.3 Document jam 2-87
4.11.4 Document becomes wrinkled 2-88
4.11.5 Document size is not detected correctly 2-88
4.12 Troubleshooting for Image Defects 2-89
4.12.1 Defect examples 2-89
4.12.2 Troubleshooting according to image defect 2-89

4.13 Troubleshooting for Fax Problems 2-94
4.13.1 Fax cannot be sent 2-94
4.13.2 Fax cannot be received 2-95
4.13.3 Telephone communication is unavailable 2-95
4.13.4 Communication error occurs 2-96
4.14 Troubleshooting for Other Problems 2-97
4.14.1 Cannot print 2-97
4.14.2 Cannot update firmware 2-97
4.14.3 Machine is not turned ON 2-98

CHAPTER 3 DISASSEMBLY/REASSEMBLY

1. SAFETY PRECAUTIONS 3-1

2. PACKING 3-2

3. SCREW CATALOGUE 3-3

4. SCREW TORQUE LIST 3-4

5. LUBRICATION 3-6

6. OVERVIEW OF GEARS 3-7

7. HARNESS ROUTING 3-9

8. DISASSEMBLY FLOW CHART 3-22

9. DISASSEMBLY PROCEDURE 3-23
9.1 Preparation 3-23
9.2 Cord Hook 3-25
9.3 Back Cover 3-26
9.4 Outer Chute ASSY 3-27
9.5 Front Cover ASSY, Support Flap 3-28
9.6 Side Cover R 3-29
9.7 Fuser Cover 3-30
9.8 Inner Chute ASSY 3-31
9.9 Side Cover L, Handset Holder ASSY (For models with handset) 3-32
9.10 Pull Arm L, Pull Arm R, Pull Arm Spring 3-34
9.11 Document Scanner Unit 3-35
9.12 ADF Unit (For models with ADF) 3-37
9.12.1 ADF Unit 3-37
9.12.2 Hinge ASSY L, Hinge R, Hinge R Support, Hinge Arm R 3-39
9.12.3 ADF Document Output Support Flap, ADF Document Support 3-40
9.12.4 ADF Cover ASSY, Gear Cover 3-41
9.12.5 Document Separate Roller ASSY 3-42
9.12.6 ADF Separation Pad Holder ASSY 3-43
9.12.7 CIS Spacer, Second Side CIS Unit (Duplex scanning models only) 3-44
9.12.8 Document Feed Roller ASSY 1 3-46

9.12.9 FFC Holder ASSY, Second Side CIS Flat Cable, ADF Motor 3-50
9.12.10 First Side Document Scanning Position Sensor PCB ASSY, Second Side Document Scanning Position Sensor PCB ASSY (Duplex scanning models only), ADF Cover/Document Detection Sensor PCB ASSY 3-55
9.13 Document Cover ASSY (For models without ADF) 3-56
9.14 Panel Unit (For models with touch panel) 3-58
9.14.1 Panel Unit 3-58
9.14.2 Panel PCB ASSY, LCD 3-59
9.14.3 Touch Panel ASSY 3-60
9.15 Panel Unit (For models without touch panel) 3-61
9.15.1 Panel Unit 3-61
9.15.2 Panel PCB ASSY 3-62
9.15.3 LCD 3-63
9.16 First Side CIS Unit, First Side CIS Flat Cable 3-64
9.17 Lock Claw, Pull Arm Guide 3-70
9.18 Modem PCB ASSY 3-71
9.19 Speaker Unit 3-73
9.20 Joint Cover ASSY 3-74
9.21 Fuser Unit 3-75
9.22 Low-voltage Power Supply PCB ASSY 3-77
9.23 Fan 3-79
9.24 High-voltage Power Supply PCB ASSY 3-80
9.25 Filter 3-82
9.26 Laser Unit 3-83
9.27 Wireless LAN PCB (Wireless network models only) 3-85
9.28 Roller Holder ASSY 3-86
9.29 Main PCB ASSY 3-87
9.30 T1 Clutch and Registration Clutch 3-88
9.31 New Toner Sensor PCB ASSY 3-89
9.32 Main Frame L ASSY 3-90
9.33 Main Motor 3-92
9.34 Fuser Gear 67R/40R 3-94
9.35 Eject Sensor PCB ASSY 3-95
9.36 Registration Front/Rear Actuator Holder ASSY 3-97

CHAPTER 4 ADJUSTING AND UPDATING SETTINGS AS REQUIRED AFTER PARTS REPLACEMENT

1. IF YOU REPLACE THE MAIN PCB ASSY 4-1
1.1 Setting by Spec (Function code: 74) 4-2
1.2 Installing Firmware (Sub firmware, demo firmware, panel firmware, and main firmware) 4-2
1.2.1 Checking firmware version 4-2
1.2.2 Installing firmware 4-3
1.3 Initializing the EEPROM of the Main PCB ASSY (Function code: 01) 4-3

1.4 Setting Serial Number and Entering Adjusted Value of Laser Unit 4-4
1.5 Acquiring White Level Data (Function code: 55) 4-5
1.6 Adjusting Touch Panel (Function code: 61) (Touch panel models only) 4-5
1.7 Resetting to Factory Shipping State 4-5

2. IF YOU REPLACE THE LOW-VOLTAGE POWER SUPPLY PCB ASSY 4-6
2.1 Reset Irregular Power Supply Detection Counter of the Low-voltage Power Supply PCB (Function code: 88) 4-6

3. IF YOU REPLACE THE LASER UNIT 4-7
3.1 Entering Adjusted Value of Laser Unit 4-8

4. IF YOU REPLACE THE PANEL UNIT OR PANEL PCB UNIT 4-9
4.1 Installing Firmware (Touch panel models only) 4-10
4.1.1 Checking firmware version 4-10
4.1.2 Installing firmware 4-10
4.2 Adjusting Touch Panel (Function code: 61) (Touch panel models only) 4-10
4.3 Checking LCD Operation (Function code: 12) 4-10

5. IF YOU REPLACE THE FIRST SIDE CIS UNIT OR DOCUMENT SCANNER UNIT 4-11
5.1 Acquiring White Level Data (Function code: 55) 4-11
5.2 Scanning and Printing Check 4-11

6. IF YOU REPLACE THE ADF UNIT OR SECOND SIDE CIS UNIT 4-12
6.1 Acquiring White Level Data (Function code: 55) (Duplex scanning models only) 4-12
6.2 Scanning and Printing Check 4-12

CHAPTER 5 SERVICE FUNCTIONS

1. FUNCTION CODE 5-1
1.1 How to Enter Maintenance Mode 5-1
1.1.1 Method of entering maintenance mode for service personnel 5-1
1.1.2 Method of entering end-user accessible maintenance mode 5-2
1.2 List of Maintenance Mode Functions 5-3
1.3 Details of Maintenance Mode Functions 5-4
1.3.1 Initialize EEPROM parameters (function code: 01, 91) 5-4
1.3.2 Print white level / black level data for document scanning compensation (function code: 05) 5-5
1.3.3 ADF performance test (function code: 08) 5-7
1.3.4 Monochrome print quality test pattern (function code: 09) 5-8
1.3.5 Set worker switches (WSW) and print worker switch setting data (function code: 10, 11) 5-9
1.3.6 Check LCD operation (function code: 12) 5-12
1.3.7 Check control panel operation (function code: 13) 5-14
1.3.8 Display software version (function code: 25) 5-15
1.3.9 Change OnePushDemo function setting (function code: 28) 5-16
1.3.10 Check sensor operation (function code: 32) 5-17
1.3.11 Display LAN connection status (function code: 33) 5-19
1.3.12 Set PC print functions (function code: 43) 5-20
1.3.13 Change USB No. return value / Adjust left-end print start position on second side when duplex printing (function code: 45) 5-23

Confidential

1.3.14 Set country / language (function code: 52) 5-25
1.3.15 Transfer received fax data / log information (function code: 53) (fax models only) 5-26
1.3.16 Fine-tune scanning position (function code: 54) 5-28
1.3.17 Acquire white level data and set CIS scan area (function code: 55) 5-29
1.3.18 Adjust touch panel (function code: 61) 5-30
1.3.19 Continuous print test (function code: 67) 5-31
1.3.20 Print frame pattern (single-side printing) (function code: 69) 5-34
1.3.21 Print frame pattern (duplex printing) (function code: 70) 5-35
1.3.22 Print test pattern (function code: 71) 5-36
1.3.23 Setting by spec (function code: 74) 5-39
1.3.24 Print maintenance information (function code: 77) 5-45
1.3.25 Check fan operation (function code: 78) 5-47
1.3.26 Display machine log information (function code: 80) 5-48
1.3.27 Display machine error code (function code: 82) 5-51
1.3.28 Send communication log information to telephone line (function code: 87) 5-51
1.3.29 Reset irregular power supply detection counter of low-voltage power supply PCB (function code: 88) 5-52
1.3.30 Quit maintenance mode (function code: 99) 5-52

2. OTHER SERVICE FUNCTIONS 5-53
2.1 Print Communication Error List 5-53

CHAPTER 6 WIRING DIAGRAM

1. WIRING DIAGRAM 6-1

CHAPTER 7 PERIODICAL MAINTENANCE

1. PERIODICAL REPLACEMENT PARTS 7-1

APPENDIX 1 SERIAL NUMBERING SYSTEM

APPENDIX 2 DELETING USER SETTING INFORMATION

APPENDIX 3 INSTALLING THE MAINTENANCE PRINTER DRIVER

SAFETY INFORMATION

■ Definitions of Warnings, Cautions, Notes and Memos

The following conventions are used in this manual:

WARNING

WARNING indicates a potentially hazardous situation which, if not avoided, could result in death or serious injuries.

CAUTION

CAUTION indicates a potentially hazardous situation which, if not avoided, may result in minor or moderate injuries.

IMPORTANT

IMPORTANT indicates a potentially hazardous situation which, if not avoided, may result in damage to property or loss of product functionality.

Prohibition icons indicate actions that must not be performed.

Electrical Hazard icons alert you to possible electrical Shock.

Fire hazard icons alert you to the possibility of fire.

Hot Surface icons warn you not to touch product parts that are hot.

Note Notes tell you how you should respond to a situation that may arise or give tips about how the operation works with other features.

Memo Memo tells you bits of knowledge to help understand the machine.

Confidential

■ To use the Machine Safely

Please keep these instructions for later reference and read them before attempting any maintenance. If you do not follow these safety instructions, there is a possibility of a fire, electrical shock, burn or suffocation.

WARNING

ELECTRICAL HAZARDS

Failure to follow the warnings in this section may create the risk of an electrical shock. In addition, you could create an electrical short, which may create the risk of a fire.

There are high voltage electrodes inside the product. Before you access the inside of the product, including for routine maintenance such as cleaning, make sure you have unplugged the telephone line cord first (MFC only) and then the power cord from the AC power outlet, as well as any telephone (RJ-11) (MFC only) or Ethernet (RJ-45) cables (Network models only) from the product. Never push objects of any kind into this product through cabinet slots, since they may touch dangerous voltage points or short out parts.

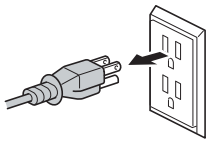

DO NOT handle the plug with wet hands.

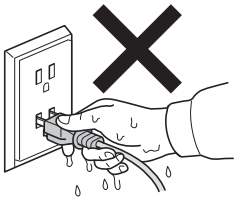

DO NOT use this product during an electrical storm.

Always make sure the plug is fully inserted. DO NOT use the product or handle the cord if the cord has become worn or frayed.

DO NOT allow this product to come into contact with water. This product should not be used around standing water, including a bath tub, sink, or swimming pool; around appliances containing water, including a refrigerator; or in a wet basement.

This product should be connected to an AC power source within the range indicated on the rating label. DO NOT connect it to a DC power source or inverter.

Power Cord Safety:

- This product is equipped with a 3-wire grounded plug. This plug will only fit into a grounded power outlet. This is a safety feature. If you are unable to insert the plug into the outlet, call your electrician to replace your obsolete outlet. DO NOT attempt to defeat the purpose of the grounded plug.
- Only use the power cord supplied with this product.
- This product should be positioned so that nothing pinches or constricts the power cord.
- DO NOT allow anything to rest on the power cord.
- DO NOT place this product where people may step on the cord.
- DO NOT place this product in a position where the cord is stretched or strained, as it may become worn or frayed.
- Brother strongly recommends that you DO NOT use any type of extension cord.

(MFC only)

Use caution when installing or modifying telephone lines. Never touch telephone wires or terminals that are not insulated unless the telephone line has been unplugged from the wall jack.

Never install telephone wiring during a lightning storm. Never install a telephone wall jack in a location that is wet or may become wet, for example, near a refrigerator or other appliance that produces condensation.

- DO NOT put a toner cartridge, a toner cartridge and drum unit assembly, or waste toner box into a fire. It could explode, resulting in injuries.
- DO NOT use flammable substances, any type of spray, or an organic solvent/liquid containing alcohol or ammonia to clean the inside or outside of the product. Doing so could cause a fire or electrical shock. Instead, use only a dry, lint-free cloth.

DO NOT attempt to operate this product when a paper jam or stray pieces of paper are inside the product. Prolonged contact of the paper with the fuser unit could cause a fire.

DO NOT use a vacuum cleaner to clean up scattered toner. Doing this might cause the toner dust to ignite inside the vacuum cleaner, potentially starting a fire. Please carefully clean the toner dust with a dry, lint-free soft cloth and dispose of it according to local regulations.

HOT SURFACE

After you have just used the product, some internal parts of the product will be extremely hot. Wait at least 10 minutes for the product to cool down before you touch the internal parts of the product.

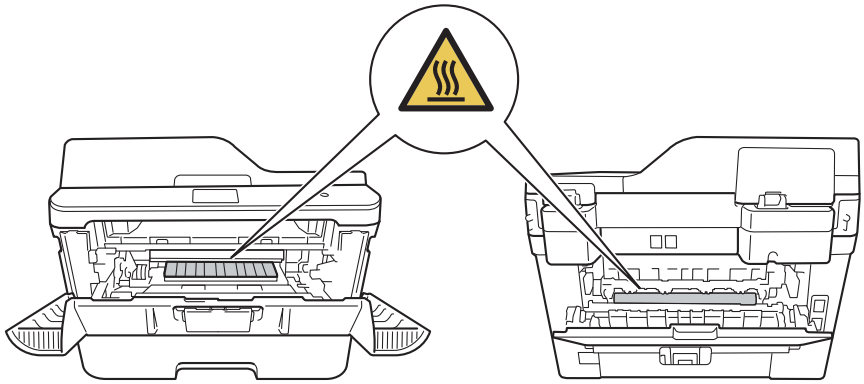

When you move the product, grasp the side handholds that are under the scanner. DO NOT carry the product by holding it at the bottom. If you do not carry the machine properly, the machine could slip out of your hands, and injury could result.

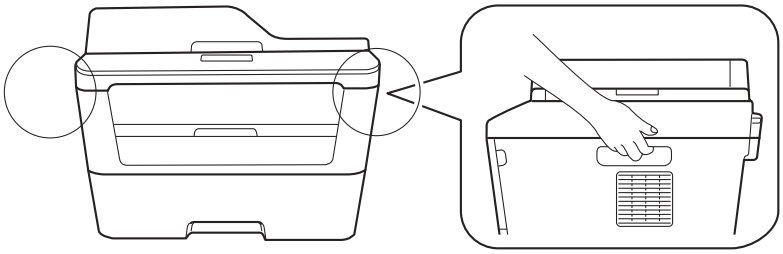

Some areas of the product can cause injury if covers (shaded) are closed with force. Take care when placing your hand in the areas shown in the illustrations, and DO NOT close the covers with force.

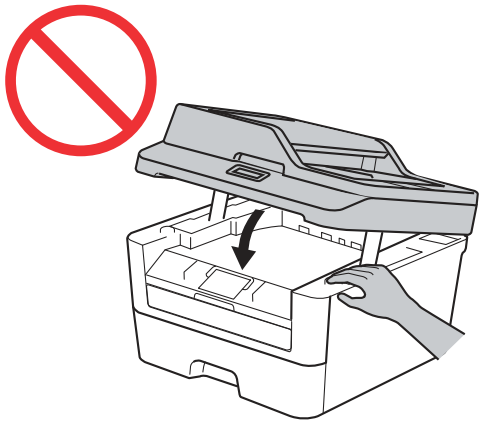

To prevent injuries, be careful not to put your fingers in the areas shown in the illustrations.

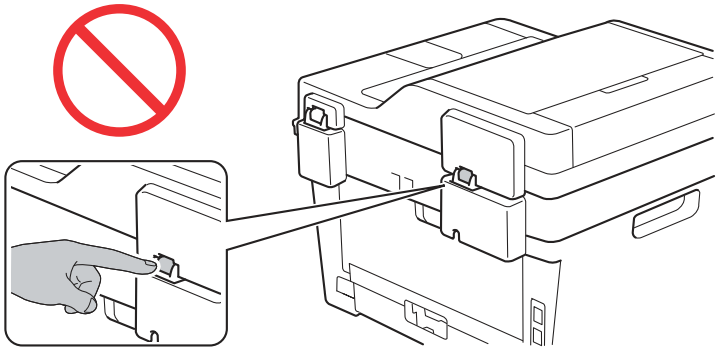

(MFC only)
When using your telephone equipment, basic safety precautions should always be followed to reduce the risk of fire, electrical shock, and injury to people. These important safety precautions include the following:

1. DO NOT use this product near water or locations that may become wet, for example, near a bath tub, wash bowl, kitchen sink or washing machine, in a wet basement or near a swimming pool.
2. Avoid using this product during an electrical storm. There may be a remote risk of an electric shock from lightning.
3. DO NOT use this product to report a gas leak in the vicinity of the leak.
4. Use only the power cord provided with the product.

Read all of the instructions. Save them for later reference.

(MFC only)
To reduce the risk of shock or fire, use only a No. 26 AWG or larger telecommunication line cord.

Confidential

■ Caution for Laser Product (WARNHINWEIS für Laserdrucker)

CAUTION: In case of any trouble with the laser unit, replace the laser unit itself. To prevent direct exposure to the laser beam, do not try to open the enclosure of the laser unit.

ACHTUNG: Im Falle von Störungen der Lasereinheit muß diese ersetzt werden. Das Gehäuse der Lasereinheit darf nicht geöffnet werden, da sonst Laserstrahlen austreten können.

<Location of the scanner window>

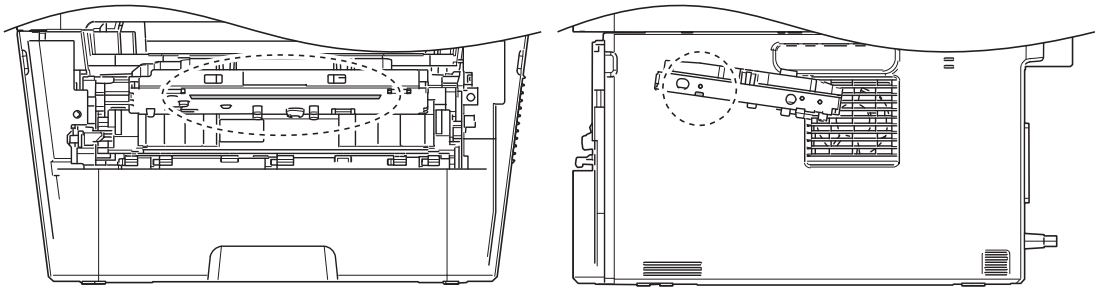

■ Additional Information

When servicing the optical system of the machine, be careful not to place a screwdriver or other reflective object in the path of the laser beam. Be sure to take off any personal accessories such as watches and rings before working on the machine. A reflected beam, though invisible, can permanently damage the eyes.

Since the beam is invisible, the following caution in print is attached on the laser unit.

In print

■ Standard Telephone and FCC Notices (MFC only)

These notices are in effect on models sold and used in the United States only.
When programming emergency numbers or making test calls to emergency numbers:

- Remain on the line and briefly explain to the dispatcher the reason for the call before hanging up.
- Perform these activities in the off-peak hours, such as early morning or late evening.

This equipment complies with Part 68 of the FCC rules and the requirements adopted by the ACTA. On the backside of this equipment is a label that contains, among other information, a product identifier in the format US: AAAEQ##TXXXX. If requested, this number must be provided to the telephone company.
You may safely connect this equipment to the telephone line by means of a standard modular jack, USOC RJ11C.
A plug and jack used to connect this equipment to the premises wiring and telephone network must comply with the applicable FCC Part 68 rules and requirements adopted by the ACTA. A compliant telephone cord and modular plug is provided with this product. It is designed to be connected to a compatible modular jack that is also compliant. (See installation instructions for details.)

The REN is used to determine the number of devices that may be connected to a telephone line. Excessive RENs on a telephone line may result in the devices not ringing in response to an incoming call. In most but not all areas, the sum of RENs should not exceed five (5.0). To be certain of the number of devices that may be connected to a line, as determined by the total RENs, contact the local telephone company. For products approved after July 23, 2001, the REN for this product is part of the product identifier that has the format US:AAAEQ##TXXXX. The digits represented by ## are the REN without a decimal point (e.g., 06 is a REN of 0.6). For earlier products, the REN is separately shown on the label.

If this equipment causes harm to the telephone network, the telephone company will notify you in advance that temporary discontinuance of service may be required. But if advance notice is not practical, the telephone company will notify the customer as soon as possible. Also, you will be advised of your right to file a complaint with the FCC if you believe it is necessary. The telephone company may make changes in its facilities, equipment, operations or procedures that could affect the operation of the equipment. If this happens the telephone company will provide advance notice in order for you to make necessary modifications to maintain uninterrupted service.

If trouble is experienced with this equipment, for repair or warranty information, please contact Brother Customer Service (see Basic User's Guide: Brother numbers). If the equipment is causing harm to the telephone network, the telephone company may request that you disconnect the equipment until the problem is resolved.

Connection to party line service is subject to state tariffs. Contact the state public utility commission, public service commission or corporation commission for information.

If your home has specially wired alarm equipment connected to the telephone line, ensure the installation of this equipment does not disable your alarm equipment. If you have questions about what will disable alarm equipment, call your telephone company or a qualified installer.

If you are not able to solve a problem with your product, contact Brother Customer Service (see Basic User's Guide: Brother numbers).

Confidential

WARNING

For protection against the risk of electrical shock, always disconnect all cables from the walloutlet before the equipment is installed, serviced, or modified.

DO NOT attempt to service this product yourself. Refer all servicing to a Brother Authorized Service Center.

IMPORTANT

- This equipment may not be used on coin service lines provided by the telephone company or connected to party lines.
- Brother cannot accept any financial or other responsibilities that may be the result of your use of this information, including direct, special or consequential damages. There are no warranties extended or granted by this document.
- This product has been certified to comply with FCC standards, which are applied to the USA only. A grounded plug should be plugged into a grounded AC power outlet after checking the rating of the local power supply for the product to operate properly and safely.

■ Legal Limitations for Copying (Products with scanning function only)

Reproductions of certain documents are illegal and may result in either criminal or civil liability. The listing below is intended to be a guide rather than a complete listing of every possible prohibition. In case of doubt, we suggest that you consult with the appropriate authority or advisor with regard to the specific document.
The following documents issued by the United States/Canadian Government or any of its Agencies, States, Territories or Provinces may not be copied:

- Money
- Bonds or other certificates of indebtedness
- Certificates of Deposit
- Internal Revenue Stamps (canceled or uncanceled)
- Selective Service or draft papers
- Passports
- United States/Canadian Postage Stamps (canceled or uncanceled)
- Food Stamps
- Immigration Papers
- Checks or drafts drawn by Governmental agencies
- Identifying badges or insignias
- Licenses and Certificates of Title to motor vehicles, under certain State/Provincial law

Copying copyrighted works may be regulated by Federal, State or local laws. For more information, consult an appropriate authority or advisor.

CHAPTER 1 SUPPLEMENTAL SPECIFICATIONS

1. GENERAL

The function comparative table for models as described in this Service Manual are shown below.

Model	DCP-7080	DCP-7080D	DCP-7180DN	DCP-L2500D DCP-L2520D	DCP-L2520DW	DCP-L2540DN	DCP-L2540DW DCP-L2541DW	DCP-L2560DW HL-L2380DW
Wired/ Wireless LAN	N/A	N/A	Wired	N/A	Wireless	Wired	Wired/ Wireless	Wired/ Wireless
Duplex printing	N/A	✓	✓	✓	✓	✓	✓	✓
Auto Duplex Copy	N/A	N/A	N/A	N/A	N/A	N/A	N/A	N/A
ADF	N/A	N/A	✓	N/A	N/A	✓	✓	N/A
Duplex Scan	N/A	N/A	N/A	N/A	N/A	N/A	N/A	N/A
Scanning method	CIS	CIS	CIS	CIS	CIS	CIS	CIS	CIS
LCD type	10 characters x 2 lines (2 byte)	10 characters x 2 lines (2 byte)	10 characters x 2 lines (2 byte)	16 characters x 2 lines	16 characters x 2 lines	16 characters x 2 lines	16 characters x 2 lines	2.7" TFT ColorLCD (6.8 cm / 67.5 mm)
Handset	N/A	N/A	N/A	N/A	N/A	N/A	N/A	N/A
FAX	N/A	N/A	N/A	N/A	N/A	N/A	N/A	N/A
Ten-key/ Touch panel	N/A	N/A	N/A	N/A	N/A	N/A	N/A	Touch panel

Model	MFC-7380	MFC-7480D	MFC-L2700D MFC-L2701D	MFC-L2680W	MFC-L2685DW	MFC-L2700DW MFC-L2701DW MFC-L2703DW MFC-L2705DW MFC-L2707DW	MFC-L2700DN	MFC-7880DN	MFC-L2720DW	MFC-L2740DW
Wired/ Wireless LAN	N/A	N/A	N/A	Wireless	Wireless	Wired/ Wireless	Wired	Wired	Wired/ Wireless	Wired/ Wireless
Duplex printing	N/A	✓	✓	N/A	✓	✓	✓	✓	✓	✓
Auto Duplex Copy	N/A	N/A	N/A	N/A	N/A	N/A	N/A	N/A	N/A	✓
ADF	✓	✓	✓	✓	✓	✓	✓	✓	✓	✓
Duplex Scan	N/A	N/A	N/A	N/A	N/A	N/A	N/A	N/A	N/A	✓
Scanning method	CIS	CIS	CIS	CIS	CIS	CIS	CIS	CIS	CIS	Dual CIS
LCD type	10 characters x 2 lines (2 byte)	10 characters x 2 lines (2 byte)	16 characters x 2 lines	10 characters x 2 lines (2 byte)	16 characters x 2 lines	16 characters x 2 lines	10 characters x 2 lines (2 byte)	10 characters x 2 lines (2 byte)	2.7" TFT ColorLCD (6.8 cm / 67.5 mm)	2.7" TFT ColorLCD (6.8 cm / 67.5 mm)
Handset	✓	✓	N/A	N/A	N/A	N/A	N/A	✓	N/A	N/A
FAX	✓	✓	✓	✓	✓	✓	✓	✓	✓	✓
Ten-key/ Touch panel	Ten-key	Ten-key	Ten-key	Ten-key	Ten-key	Ten-key	Ten-key	Ten-key	Touch panel	Touch panel

Specifications are subject to change without notice.

Model		DCP-7080	DCP-7080D DCP-L2500D DCP-L2520D	DCP-L2520DW	DCP-L2540DN DCP-7180DN	DCP-L2540DW DCP-L2541DW	DCP-L2560DW HL-L2380DW
Warm-up time	From Sleep mode	Less than 9 seconds at 73.4F (23°C)					Less than 10 seconds at 73.4F (23°C) (except for Oceania) Less than 9 seconds at 73.4F (23°C) (for Oceania)
	From Power OFF → ON	Less than 28 seconds at 73.4F (23°C)					
First print time	From Ready mode	Less than 8.5 seconds at 73.4F (23°C)					
	From Sleep mode	Less than 17.5 seconds at 73.4F (23°C)					
CPU		ARM9 266 MHz					
Backup Clock		N/A					
Dimensions (W x D x H)	Carton size	567 x 517 x 414 mm (22.3 x 20.4 x 16.3 inch)			567 x 517 x 435 mm (22.3 x 20.4 x 17.1 inch)		567 x 517 x 414 mm (22.3 x 20.4 x 16.3 inch)
	Machine size	409 x 398.5 x 267 mm (16.1 x 15.7 x 10.5 inch)			409 x 398.5 x 316.5 mm (16.1 x 15.7 x 12.5 inch)		409 x 398.5 x 267 mm (16.1 x 15.7 x 10.5 inch)

Specifications are subject to change without notice.

Model		DCP-7080	DCP-7080D DCP-L2500D DCP-L2520D	DCP-L2520DW	DCP-L2540DN DCP-7180DN	DCP-L2540DW DCP-L2541DW	DCP-L2560DW HL-L2380DW
Weights	with Carton	12.3 kg / 27.1 lb	11.9 kg / 26.2 lb (for the U.S.A.) 12.5 kg / 27.6 lb (except for the U.S.A.)		13.6 kg / 30.0 lb (for the U.S.A.) 14.2 kg / 31.3 lb (except for the U.S.A.)		12.1 kg / 26.7 lb (for the U.S.A.) 12.2 kg / 26.9 lb (for Oceania) 12.7 kg / 28.0 lb (for Europe)
	without Carton, with toner/drum	9.9 kg / 21.8 lb	9.6 kg / 21.2 lb (for the U.S.A.) 10.1 kg / 22.3 lb (for China) 9.7 kg / 21.4 lb (for Europe, Asia)		11.1 kg / 24.5 lb (for the U.S.A.) 11.2 kg / 24.7 lb (for Europe, Asia) 11.6 kg / 25.6 lb (for China)		9.8 kg / 21.6 lb (for the U.S.A.) 9.9 kg / 21.8 lb (for Europe, Oceania)
	without Carton and toner/drum	9.0 kg / 19.8 lb	8.7 kg / 19.2 lb (for the U.S.A.) 9.2 kg / 20.3 lb (for China) 8.5 kg / 18.7 lb (for Europe) 8.8 kg / 19.4 lb (for Asia)		10.0 kg / 22.0 lb (for Europe) 10.2 kg / 22.5 lb (for the U.S.A.) 10.3 kg / 22.7 lb (for Asia) 10.7 kg / 23.6 lb (for China)		8.9 kg / 19.6 lb (for the U.S.A.) 9.0 kg / 19.8 lb (for Oceania) 8.7 kg / 19.2 lb (for Europe)

Specifications are subject to change without notice.

Model		MFC-7380	MFC-L2680W	MFC-L2700D MFC-L2701D MFC-7480D MFC-7880DN	MFC-L2685DW MFC-L2700DW MFC-L2701DW MFC-L2703DW MFC-L2705DW MFC-L2707DW MFC-L2700DN	MFC-L2720DW	MFC-L2740DW
Warm-up time	From Sleep mode	Less than 9 seconds at 73.4F (23°C)				Less than 10 seconds at 73.4F (23°C)	
	From Power OFF → ON	Less than 28 seconds at 73.4F (23°C)					
First print time	From Ready mode	Less than 8.5 seconds at 73.4F (23°C)					
	From Sleep mode	Less than 17.5 seconds at 73.4F (23°C)					
CPU		ARM9 266 MHz					
Backup Clock		Up to 2 hours				Up to 60 hours	
Dimensions (W x D x H)	Carton size	572 x 517 x 435 mm (22.5 x 20.4 x 17.1 inch) (for China) 567 x 517 x 435 mm (22.3 x 20.4 x 17.1 inch) (except for China)					
	Machine size	481 x 398.5 x 316.5 mm (18.9 x 15.7 x 12.5 inch) (for China) 409 x 398.5 x 316.5 mm (16.1 x 15.7 x 12.5 inch) (except for China)					
Weights	with Carton	14.6 kg / 32.2 lb	13.7 kg / 30.21 lb	14.9 kg / 32.8 lb (for China) 14.4 kg / 31.7 lb (for Asia)	13.8 kg / 30.4 lb (for the U.S.A.) 14.4 kg / 31.7 lb (for Europe, Asia) 13.9 kg / 30.6 lb (for Oceania)	14.4 kg / 31.7 lb (for the U.S.A.) 14.6 kg / 32.2 lb (for Europe) 14.1 kg / 31.1 lb (for Oceania)	14.2 kg / 31.3 lb (for the U.S.A.) 14.8 kg / 32.6 lb (for Europe, Asia) 14.3 kg / 31.5 lb (for Oceania)
	without Carton, with toner/drum	11.9 kg / 26.2 lb	11.2 kg / 24.7 lb	12.2 kg / 26.9 lb (for China) 11.4 kg / 25.1 lb (for Asia)	11.3 kg / 24.9 lb (for the U.S.A.) 11.4 kg / 25.1 lb (for Europe, Oceania, Asia)	11.5 kg / 25.4 lb (for the U.S.A.) 11.6 kg / 25.6 lb (for Europe, Oceania)	11.7 kg / 25.8 lb (for the U.S.A.) 11.8 kg / 26.0 lb (for Europe, Oceania, Asia)
	without Carton and toner/drum	11.0 kg / 24.3 lb	10.3 kg / 22.7 lb	11.3 kg / 24.9 lb (for China) 10.5 kg / 23.1 lb (for Asia)	10.4 kg / 22.9 lb (for the U.S.A.) 10.2 kg / 22.5 lb (for Europe) 10.5 kg / 23.1 lb (for Oceania, Asia)	10.6 kg / 23.4 lb (for the U.S.A.) 10.4 kg / 22.9 lb (for Europe) 10.7 kg / 23.6 lb (for Oceania)	10.8 kg / 23.8 lb (for the U.S.A.) 10.6 kg / 23.4 lb (for Europe) 10.9 kg / 24.0 lb (for Oceania, Asia)

Specifications are subject to change without notice.

2. NETWORK CONNECTIVITY

Model		DCP-7080 DCP-7080D DCP-L2500D DCP-L2520D	DCP-L2520DW	DCP-L2540DN DCP-7180DN	DCP-L2540DW DCP-L2541DW	DCP-L2560DW HL-L2380DW
Wired network	Network node type	N/A		NC-8700h		
Wireless network	Network node type	N/A	NC-8300w	N/A	NC-8300w	

Model		MFC-7380 MFC-7480D MFC-L2700D MFC-L2701D	MFC-L2680W MFC-L2685DW	MFC-L2700DW MFC-L2701DW MFC-L2703DW MFC-L2705DW MFC-L2707DW	MFC-7880DN MFC-L2700DN	MFC-L2720DW MFC-L2740DW
Wired network	Network node type	N/A		NC-8700h		
Wireless network	Network node type	N/A	NC-8300w		N/A	NC-8300w

Specifications are subject to change without notice.

Confidential

3. SERVICE INFORMATION

Model		DCP-7080 DCP-7080D DCP-L2500D DCP-L2520D DCP-L2520DW	DCP-L2540DN DCP-7180DN	DCP-L2540DW DCP-L2541DW	DCP-L2560DW HL-L2380DW
Machine life		Up to 50,000 pages or 5 years			
Part life (ADF)		N/A	Up to 50,000 pages or 5 years		N/A
Part life (Document Scanner Unit)		Up to 50,000 pages or 5 years			
MTBF		4,000 hours			
MTTR		0.5 hours			
Maximum monthly volume		Up to 10,000 pages			
Periodical maintenance parts	Fuser Unit	Up to 50,000 pages			
	Laser Unit	Up to 50,000 pages			
	PF Kit 1	Up to 50,000 pages			

Model		MFC-7380 MFC-7480D MFC-L2700D MFC-L2701D MFC-L2700DN	MFC-L2680W MFC-L2685DW MFC-L2700DW MFC-L2701DW MFC-L2703DW MFC-L2705DW MFC-L2707DW	MFC-7880DN	MFC-L2720DW MFC-L2740DW
Machine life		Up to 50,000 pages or 5 years			
Part life (ADF)		Up to 50,000 pages or 5 years			
Part life (Document Scanner Unit)		Up to 50,000 pages or 5 years			
MTBF		4,000 hours			
MTTR		0.5 hours			
Maximum monthly volume		Up to 10,000 pages			
Periodical maintenance parts	Fuser Unit	Up to 50,000 pages			
	Laser Unit	Up to 50,000 pages			
	PF Kit 1	Up to 50,000 pages			

Specifications are subject to change without notice.

4. SUPPLIES

Model		DCP-7080 DCP-7080D DCP-L2500D DCP-L2520D	DCP-L2540DN DCP-7180DN	DCP-L2520DW DCP-L2540DW DCP-L2541DW	DCP-L2560DW HL-L2380DW
Toner cartridge	Starter Toner *1	Approximately 700 pages (for Europe) Approximately 2,600 pages (for Asia)	Approximately 2,600 pages (for China) Approximately 1,200 pages (for Europe)	Approximately 700 pages (for the U.S.A., Europe) Approximately 2,600 pages (for Asia)	Approximately 700 pages (except for Europe) Approximately 1,200 pages (for Europe)
	Standard Toner	Approximately 1,200 pages (except for DCP-L2541DW) N/A (for DCP-L2541DW)			
	High Capacity Toner	Approximately 2,600 pages			
When printing A4/Letter size one sided pages in accordance with ISO/IEC 19798 Shelf life: 2 years without opening (6 months after opening)					
Drum unit		Life expectancy: Approximately 12,000 pages (1 page/job) The life expectancy varies according to the use condition. Shelf life: 2 years			
The shelf life of toner cartridge and drum unit is guaranteed under the normal condition as below; (Temperature) Normal condition: 0 to 40°C * Storage condition at the temperature of 40 to 50°C: Up to 5 days * Storage condition at the temperature of -20 to 0°C: Up to 5 days (Humidity) Normal condition: 35 to 85% (without condensation) * Storage condition at the humidity of 85 to 95%: Up to 5 days (without condensation) * Storage condition at the humidity of 10 to 35%: Up to 5 days (without condensation)					

*1 Toner supplied with the machine.

Specifications are subject to change without notice.

Confidential

<table>
<tr><td colspan="2">Model</td><td>MFC-7380
MFC-7480D
MFC-L2700D
MFC-L2701D
MFC-L2700DN</td><td>MFC-L2680W
MFC-L2685DW
MFC-L2700DW
MFC-L2701DW
MFC-L2703DW
MFC-L2705DW</td><td>MFC-L2707DW</td><td>MFC-7880DN</td><td>MFC-L2720DW
MFC-L2740DW</td></tr>
<tr><td rowspan="3">Toner cartridge</td><td>Starter Toner *1</td><td colspan="2">Approximately 700 pages (except for China, Asia)
Approximately 2,600 pages (for China, Asia)</td><td>Approximately 1,200 pages</td><td colspan="2">Approximately 700 pages (for the U.S.A., Oceania)
Approximately 1,200 pages (for Europe)
Approximately 2,600 pages (for China, Asia)</td></tr>
<tr><td>Standard Toner</td><td colspan="5">Approximately 1,200 pages (except for MFC-L2701D, MFC-L2701DW)
N/A (for MFC-2701D, MFC-L2701DW)</td></tr>
<tr><td>High Capacity Toner</td><td colspan="5">Approximately 2,600 pages</td></tr>
<tr><td colspan="6">When printing A4/Letter size one sided pages in accordance with ISO/IEC 19798
Shelf life: 2 years without opening (6 months after opening)</td></tr>
<tr><td colspan="2">Drum unit</td><td colspan="4">Life expectancy: Approximately 12,000 pages (1 page/job)
The life expectancy varies according to the use condition.
Shelf life: 2 years</td></tr>
<tr><td colspan="6">The shelf life of toner cartridge and drum unit is guaranteed under the normal condition as below;
(Temperature) Normal condition: 0 to 40°C
* Storage condition at the temperature of 40 to 50°C: Up to 5 days
* Storage condition at the temperature of -20 to 0°C: Up to 5 days
(Humidity) Normal condition: 35 to 85% (without condensation)
* Storage condition at the humidity of 85 to 95%: Up to 5 days (without condensation)
* Storage condition at the humidity of 10 to 35%: Up to 5 days (without condensation)</td></tr>
</table>

*1 Toner supplied with the machine.

Specifications are subject to change without notice.

5. MEDIA SPECIFICATIONS

Model		DCP-7080 DCP-7080D DCP-L2500D DCP-L2520D DCP-L2520DW	DCP-L2540DN DCP-7180DN	DCP-L2540DW DCP-L2541DW	DCP-L2560DW HL-L2380DW
Paper input	ADF	N/A	Plain Paper, Recycled Paper		N/A
Media weight	ADF	N/A	64 to 90 g/m^2 (17 to 24 lb)		N/A
Media size	ADF	N/A	Width 147.3 to 215.9 mm, Length 147.3 to 356.0 mm (Width 5.8 to 8.5 inch, Length 5.8 to 14.0 inch)		N/A

Model		MFC-7380 MFC-7480D MFC-L2700D MFC-L2701D MFC-L2700DN	MFC-L2680W MFC-L2685DW MFC-L2700DW MFC-L2701DW MFC-L2703DW MFC-L2705DW MFC-L2707DW	MFC-7880DN	MFC-L2720DW MFC-L2740DW
Paper input	ADF	Plain Paper, Recycled Paper			
Media weight	ADF	64 to 90 g/m^2 (17 to 24 lb)			
Media size	ADF	Width 147.3 to 215.9 mm, Length 147.3 to 355.6 mm (Width 5.8 to 8.5 inch, Length 5.8 to 14.0 inch)			

Specifications are subject to change without notice.

6. FAX (ONLY FOR THE MODELS WITH FAX FUNCTION)

Model		MFC-7380 MFC-7480D MFC-L2700D MFC-L2701D MFC-L2700DN	MFC-L2680W MFC-L2685DW MFC-L2700DW MFC-L2701DW MFC-L2703DW MFC-L2705DW MFC-L2707DW	MFC-7880DN	MFC-L2720DW MFC-L2740DW
Modem Speed		33,600 bps (Fax)			
Transmission speed		Approximately 2.5 seconds (ITU-T Test Chart, Std resolution, JBIG)			
ITU-T group		Super G3			
Color FAX	Sending	N/A			
	Receiving	N/A			
Internet FAX (ITU T.37 simple mode)		N/A		Yes (Download only)	

Specifications are subject to change without notice.

7. COPY

Model		DCP-7080 DCP-7080D DCP-L2520D	DCP-L2500D	DCP-L2520DW	DCP-L2540DN DCP-7180DN	DCP-L2540DW DCP-L2541DW DCP-L2560DW HL-L2380DW
Copy Speed (A4/Letter)		Up to 30/32 cpm	Up to 26/27 cpm		Up to 30/32 cpm	
First copy out time	From Ready mode and Paper tray	Less than 10 seconds				
First copy out time	From Sleep mode and Paper tray	Less than 21 seconds				
Resolution (dpi)		600 x 600 dpi				
Auto duplex scanning copy		N/A				

Model		MFC-7380 MFC-7480D MFC-L2700D MFC-L2701D	MFC-L2680W MFC-L2685DW MFC-L2700DN	MFC-L2700DW	MFC-L2701DW MFC-L2703DW MFC-L2705DW MFC-L2707DW	MFC-7880DN MFC-L2720DW	MFC-L2740DW
Copy Speed (A4/Letter)		Up to 30/32 cpm	Up to 24/24 cpm	Up to 26/27 cpm (for the U.S.A., Europe, Australia) Up to 30/32 cpm (for New Zealand, Asia)	Up to 30/32 cpm		
First copy out time	From Ready mode and Paper tray	Less than 10 seconds					
First copy out time	From Sleep mode and Paper tray	Less than 21 seconds					
Resolution (dpi)		600 x 600 dpi					
Auto duplex scanning copy		N/A					Yes

Specifications are subject to change without notice.

8. SCANNER

Model		DCP-7080 DCP-7080D DCP-L2520D DCP-L2500 DDCP-L2520DW	DCP-L2540DN DCP-7180DN	DCP-L2540DW DCP-L2541DW	DCP-L2560DW HL-L2380DW
Resolution (Optical)	FB	Maximum 600 x 2400 dpi			
	ADF	N/A	Maximum 600 x 600 dpi		N/A
Resolution (Interpolated)		Maximum scanning 19,200 (main scanning) x 19,200 dpi (sub scanning)			
Scanning speed	Monochrome	2.41 seconds (Letter) / 2.56 seconds (A4)			
	Color	7.22 seconds (Letter) / 7.67 seconds (A4)			

Model		MFC-7380	MFC-L2700D MFC-L2701D MFC-7480D MFC-L2700DN	MFC-2680W MFC-L2685DW MFC-L2700DW MFC-L2701DW MFC-L2703DW MFC-L2705DW MFC-L2707DW	MFC-7880DN	MFC-L2720DW MFC-L2740DW
Resolution (Optical)	FB	Maximum 600 x 2,400 dpi				
	ADF	Maximum 600 x 600 dpi				
Resolution (Interpolated)		Maximum scanning 19,200 (main scanning) x 19,200 dpi (sub scanning)				
Scanning speed	Monochrome	2.41 seconds (Letter) / 2.56 seconds (A4)				
	Color	7.22 seconds (Letter) / 7.67 seconds (A4)				

Specifications are subject to change without notice.

CHAPTER 2 ERROR INDICATIONS & TROUBLESHOOTING

1. INTRODUCTION

Troubleshooting is a collection of solution procedures that service personnel should follow if an error or malfunction occurs in the machine. It is difficult to determine troubleshooting procedures for all possible problems that may occur in the future. Therefore, this chapter describes typical problems and recovery procedures for these. These will help service personnel identify and repair other similar defective sections.

1.1 Precautions

Be sure to observe the following precautions to prevent any secondary problems occurring during troubleshooting:

(1) Be sure to unplug the power cord before removing any covers or PCBs, adjusting the machine, or conducting continuity tests using a tester.

(2) Do not hold the cable when connecting or disconnecting the cable. Be sure to hold the connector.

(3) Static electricity charged in your body may damage electronic parts.
Before handling the PCBs, touch a metal section of the machine to discharge static electricity. When transporting PCBs, be sure to wrap them in conductive sheets.
When replacing the PCBs, wear a grounding wrist band and perform replacement on an antistatic mat.
Also take care not to touch the conductor sections on the flat cables.

(4) Be sure to always observe all warnings.

Warning

Hazard label as shown below is attached to the machine. Fully understand the descriptions on the hazard labels and observe them during troubleshooting. Take extreme care not to remove or damage the hazard labels.

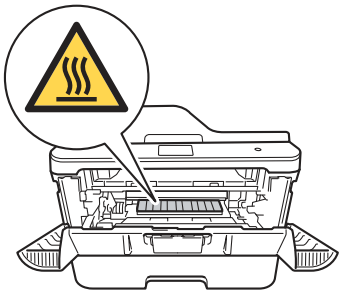

Warning

DO NOT use any flammable spray or flammable solvent such as alcohol, benzine, or thinner in or around the machine. Otherwise a fire or electric shock may result.

(5) After repair is completed, check that the repaired sections, including those removed once and then remounted, operate normally.

1.2 Checks before Commencing Troubleshooting

Check the following items before commencing repairs on the machine.

■ Operating environment

(1) The machine is placed on a flat, stable surface.
(2) The machine is used in a clean environment where the temperature is 10°C (50°F) to 32.5°C (90.5°F), and the relative humidity is maintained between 20% and 80%.
(3) The machine is not exposed to direct sunlight, excessive heat, moisture, or dust.
(4) Hold the machine level while moving it. Be sure to move or lift the machine with two or more people.

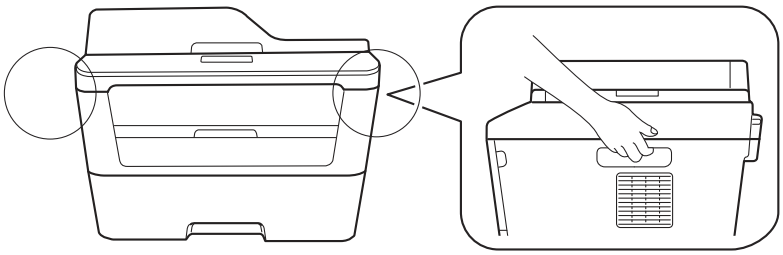

Fig. 2-1

■ Power supply

(1) Power described on the rating label attached on the machine is supplied.
Power fluctuation should be within ±10% of the rated voltage.
(2) The AC input power supply is within the regulated value.
(3) The cables and harnesses are connected correctly.
(4) The fuses are not blown.

■ Paper

(1) The recommended type of paper is being used.
(2) The paper is not damp.
(3) Short-grained paper or acid paper is not used.

■ Consumable parts

(1) The drum unit (including toner cartridge) is set correctly.

■ Others

(1) Condensation

When the machine is moved to a warm room from a cold location, condensation may occur inside the machine, causing various problems as listed below.

- Condensation on the surface of optical devices such as the lens, reflecting mirror and protection glass may cause light print image.
- If the exposure drum is cold, the electrical resistance of the photosensitive layer is increased, making it impossible to obtain the correct print density.
- Condensation on the charge unit may cause corona charge leakage.
- Condensation on the plate or separation pad may cause paper feed problems.

If condensation has formed in the machine, leave the machine for at least two hours until it reaches room temperature.

If the drum unit is unpacked soon after it is moved to a warm room from a cold location, condensation may occur inside the unit which may cause printing failure. Leave the drum unit for one or two hours until it reaches room temperature, and then unpack it.

(2) Low temperature

The motor may not operate normally in a cold environment because too much load is applied to each drive. In this case, increase the room temperature.

■ Cleaning

Use a soft lint-free cloth.

Warning

DO NOT use any flammable spray or flammable solvent such as alcohol, benzine, or thinner to clean the machine. DO NOT use these articles near the machine.

2. OVERVIEW

2.1 Cross-section Drawing

2.1.1 Printer part

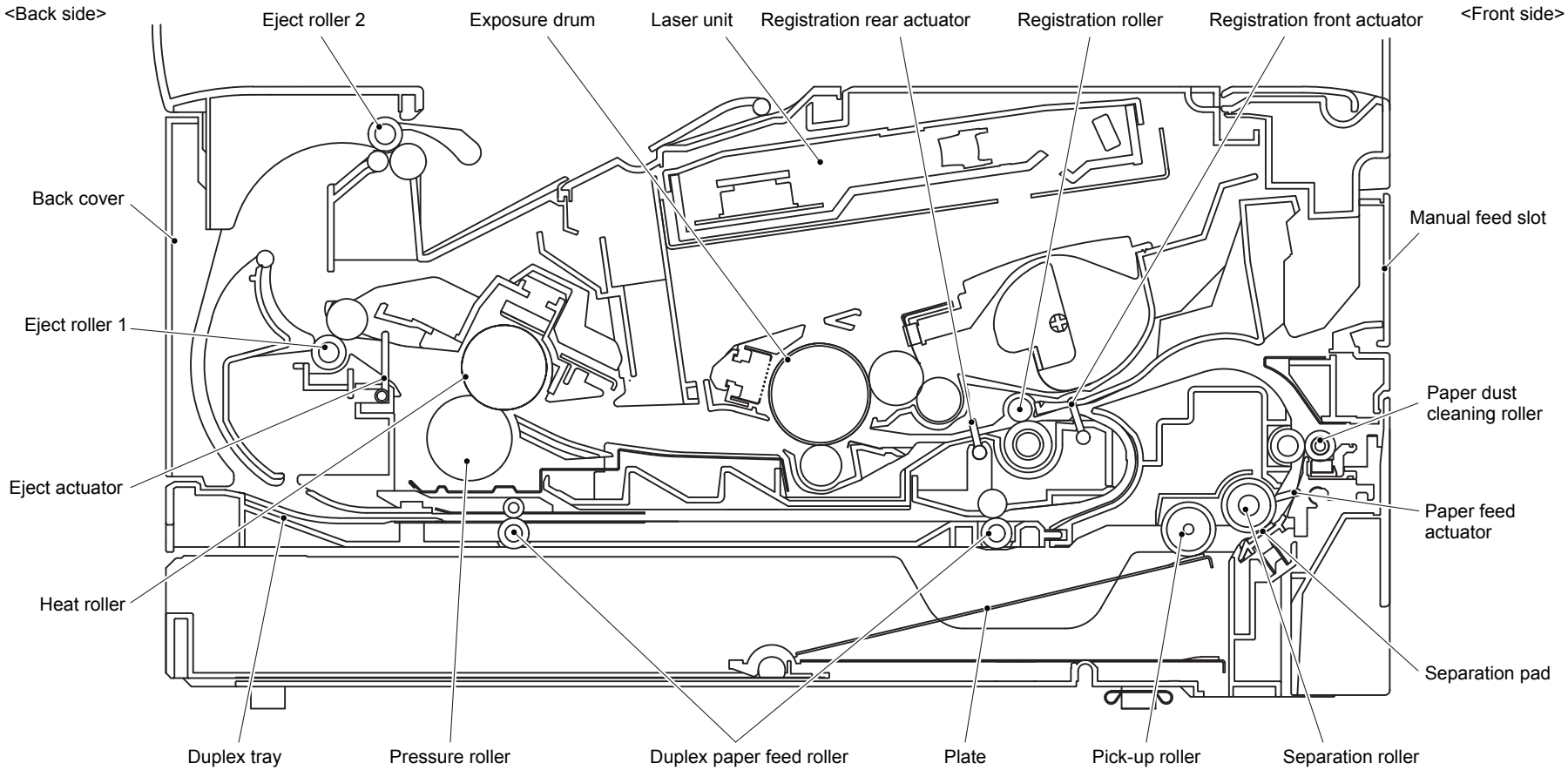

Fig. 2-2

2.1.2 Scanner part

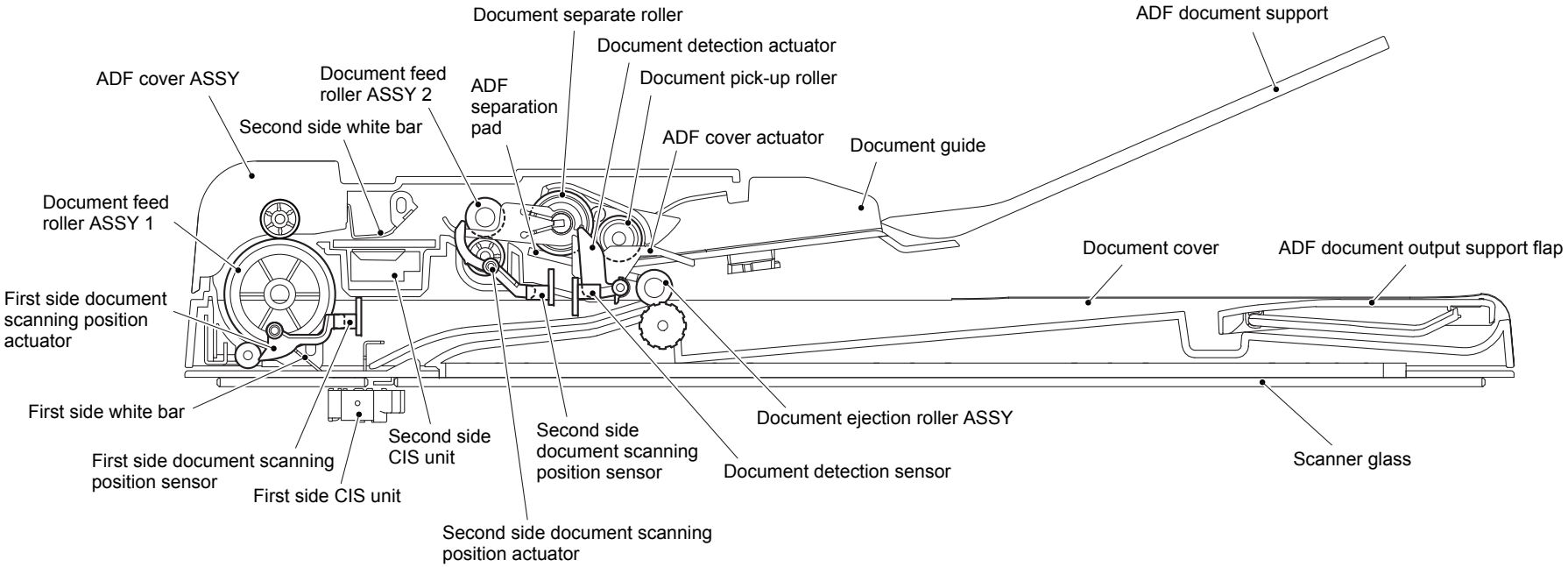

Fig. 2-3

2.2 Paper Feeding

2.2.1 Printer part

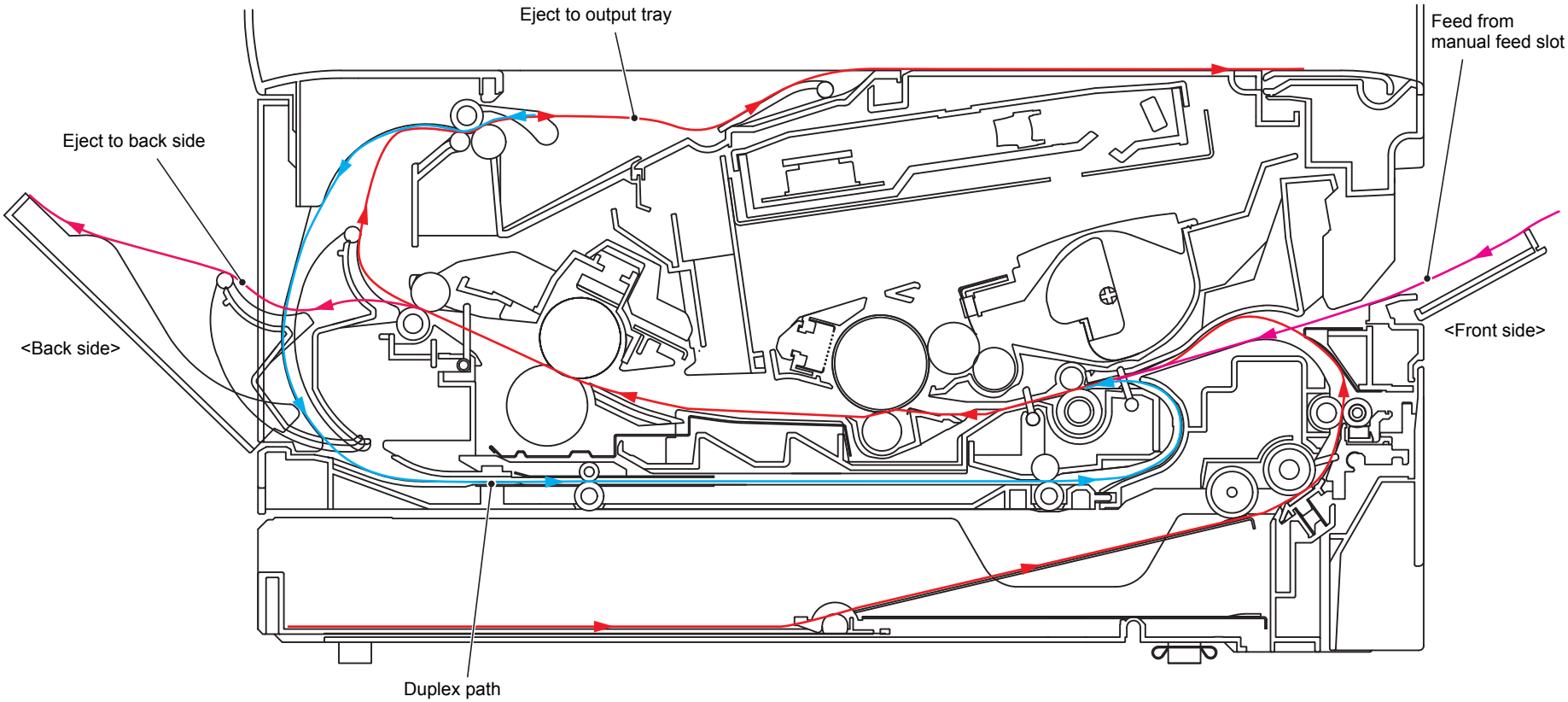

Fig. 2-4

2.2.2 Scanner part

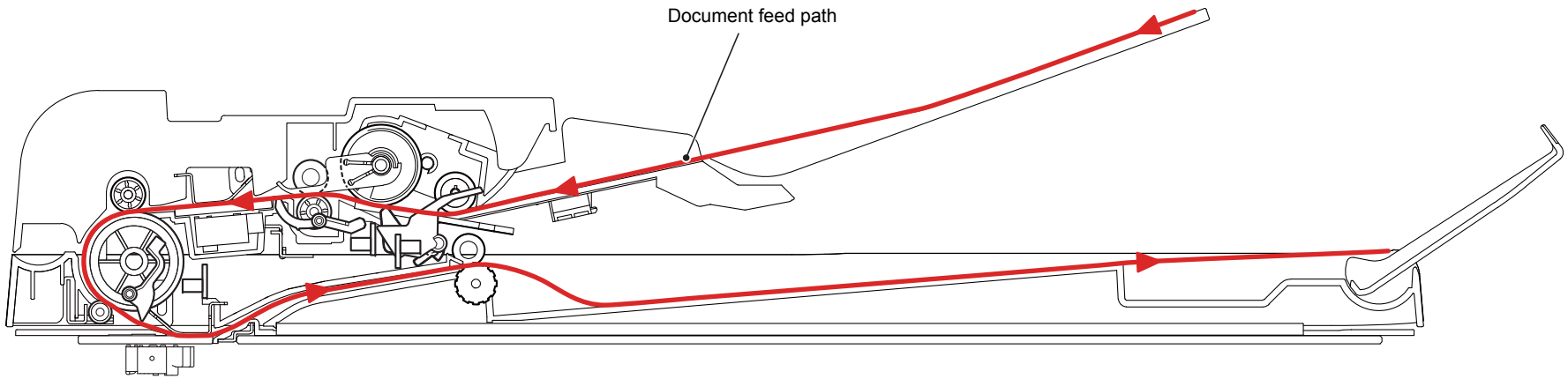

Fig. 2-5

Confidential

2.3 Operation of Each Part

Part name	Operation
Pick-up roller	Feeds paper from the paper tray to the separation roller.
Separation roller Separation pad	Separates paper fed from the paper tray into single sheets.
Paper feed actuator (Paper feed sensor)	Detects the paper tray (open / closed). Detects paper in the paper tray. Detects paper jams in the front section of the machine.
Registration front actuator (Registration front sensor)	Detects the front edge of the paper to control the registration roller drive. Detects paper jams in the front section of the machine. Determines whether paper is fed from the paper tray.
Registration roller	Corrects the inclination of the paper when the paper makes contact with the stopped registration roller. After the correction, it rotates to feed the paper to the feeding path.
Registration rear actuator (Registration rear sensor)	Detects paper pass and adjusts the writing start position for the paper. Detects paper jams in the front or center section of the machine. Detects the rear edge of the paper to identify the paper size.
Heat roller Pressure roller	Fuses the toner transferred to paper by heat and pressure, and feeds paper to the eject roller 1.
Eject actuator (Eject sensor)	Determines whether paper is ejected from the fuser unit. Detects the rear edge of the paper in duplex printing mode to adjust the turn-over timing of the eject roller 2.
Eject roller 1	Feeds the paper ejected from the fuser unit to eject roller 2.
Eject roller 2	Ejects paper to the face-down output tray. During the duplex printing, the eject roller 2 rotates conversely and feeds paper to the duplex tray after the paper has been fed from the eject roller 2 with the second side printed.
Duplex paper feed roller	Feeds paper pass through the duplex tray to the registration roller.
Front cover sensor	Detects open front cover.
Back cover/duplex tray sensor	Detects open / closed back cover or the duplex tray is set.
Document pick-up roller	Pulls in the document from the ADF document support.
Document separate roller ADF separation pad	Separates the documents fed from the ADF document support into single sheets.
Document detection actuator (Document detection sensor)	Detects whether a document is set in the ADF.
First / Second side document scanning position actuator (Document scanning position sensor)	Detects the scanning start position (first side / second side). Detects a document jam in the ADF.
Document ejection roller ASSY	Feeds a document to the document cover.
ADF cover actuator (ADF cover sensor)	Detects whether the ADF cover is open or closed.

2.4 Block Diagram

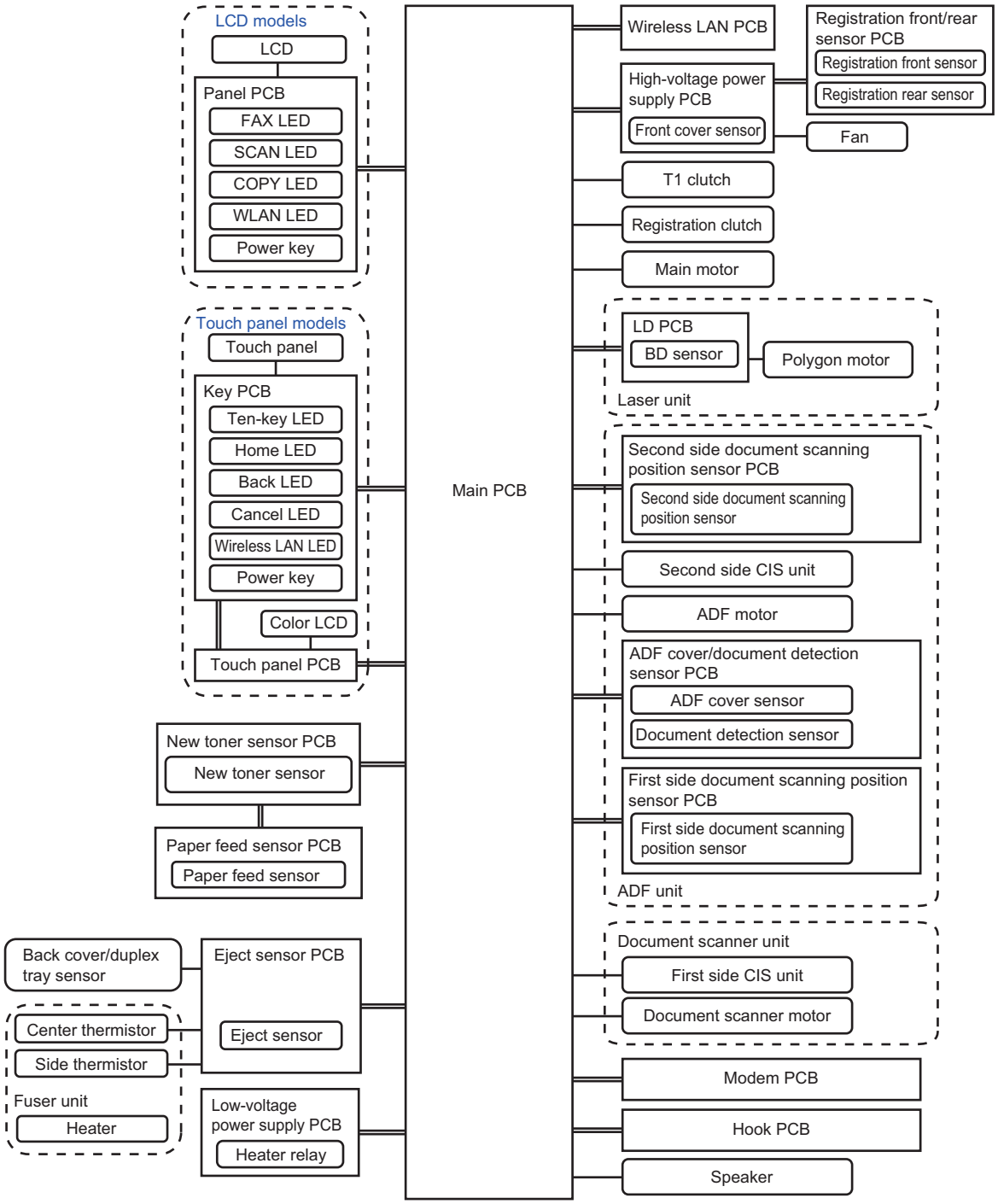

Fig. 2-6

Confidential

2.5 Main Components

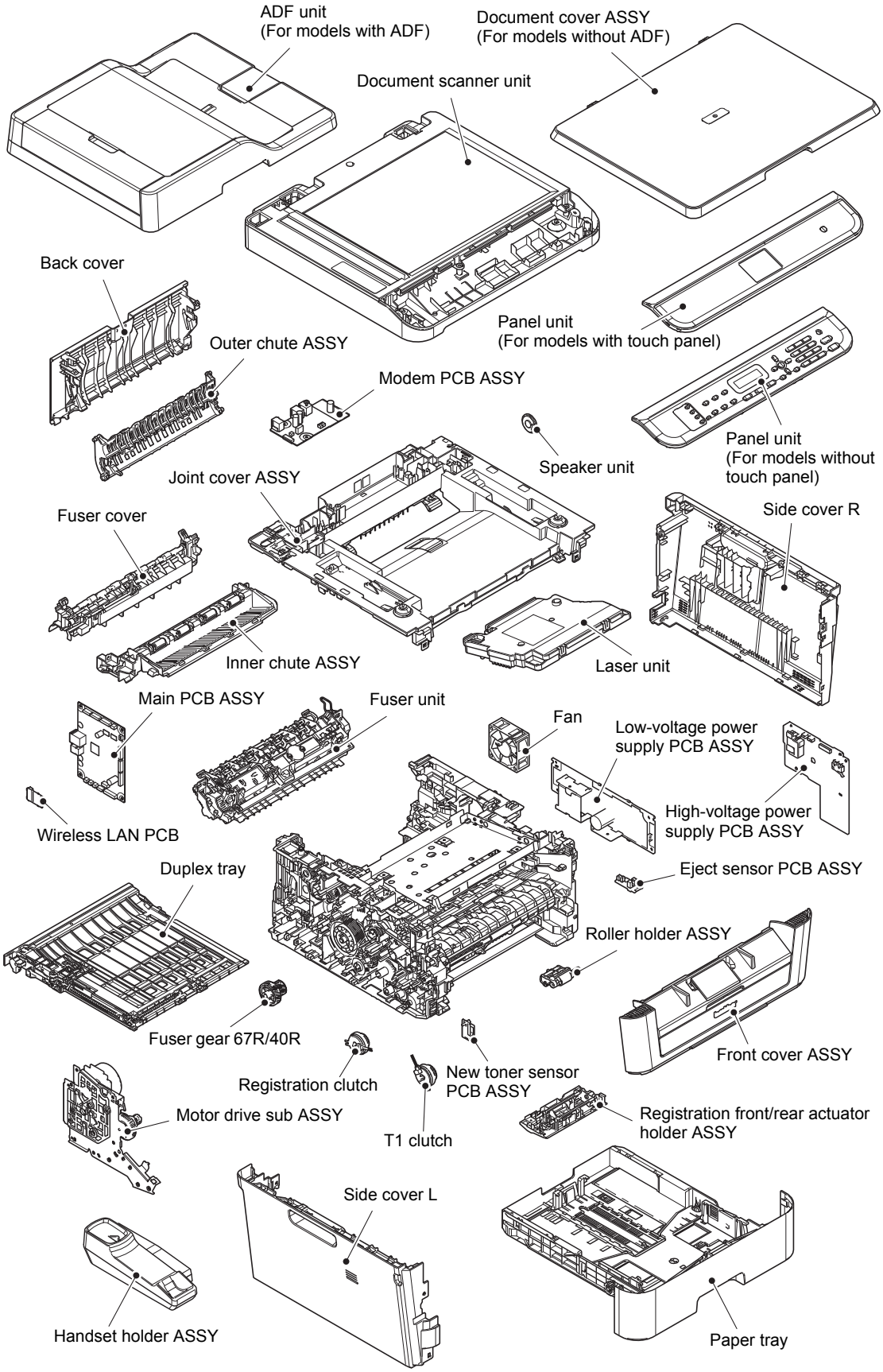

Fig. 2-7

3. ERROR INDICATIONS

This machine includes a self-diagnosis function. If the machine does not work normally it judges that an error has occurred, and indicates the corresponding error message on the LCD, which in turn helps the service personnel to quickly find out the problem.

3.1 Error Codes

Errors in shaded column do not usually occur during normal use. The possible causes are noise around the installation site, fluctuation of the power supply voltage, and failures in the software.

Error codes	Description	Refer to:	Error codes	Description	Refer to:
0100	—		0504	After the heat unit was heated normally, the center thermistor of the fuser unit detected a temperature lower than the specified value.	2-33
0201	Cannot detect the synchronized signal of the main motor. The speed of the main motor does not stabilize within the specified time.	2-31	0505	The center thermistor of the fuser unit detected a temperature rise greater than the specified value within the specified time.	2-33
0202	—		0506	The center thermistor of the fuser unit detected a temperature fall greater than the specified value within the specified time.	2-34
0203	—		050A	The hardware detected a temperature error through the center thermistor or the side thermistor of the fuser unit.	2-35
0204	—		050B	When the center thermistor of the fuser unit was lower than the idle temperature, the side thermistor detected a temperature higher than the specified temperature.	2-35
0205	—		050C	When the center thermistor of the fuser unit was higher than the idle temperature, the side thermistor detected a temperature lower than the specified temperature.	2-35
0206	—		050D	—	
0207	—		050F	An error occurred in the fuser unit.	2-35
0208	—		0600	A communication error occurred between the ASIC controlled by engine and the motor driver.	2-36
0209	—		0700	—	
0300	Cannot detect the lock signal of the polygon motor for the laser unit (second time).	2-32	0800	An error occurred in the internal temperature sensor.	2-36
0305	Cannot detect the lock signal of the polygon motor for the laser unit (first time).	2-32	0900	Detected irregular power supply for more than 100 times.	2-36
0401	Cannot detect the synchronized signal of the polygon motor for the laser unit (second time).	2-32	0A01	—	
0402	—		0A02	Detected a fan failure.	2-37
0405	Cannot detect the synchronized signal of the polygon motor for the laser unit (first time).	2-32	0B01	An error occurred in the high-voltage power supply PCB ASSY while operating.	2-37
0501	The center thermistor of the fuser unit has not reached the specified temperature within the specified time.	2-33	0B02	An error occurred in the high-voltage power supply PCB ASSY when the machine was in the ready state.	2-37
0502	The center thermistor of the fuser unit has not reached the specified temperature within the specified time after it was heated normally to the certain level.	2-33	0C00	—	
0503	The center thermistor of the fuser unit detected a temperature higher than the specified value.	2-33	0D01	—	

Error codes	Description	Refer to:	Error codes	Description	Refer to:
0D02	—		2402	—	
0D03	—		2403	—	
0D04	—		2404	—	
0E00	—		2405	—	
1003	—		2408	—	
1004	—		2409	—	
1100	—		2501	—	
1200	—		2502	—	
1300	—		2503	—	
1400	—		2504	—	
1500	—		2601	—	
1C00	—		2602	—	
1D01	—		2603	—	
1D02	—		2604	—	
1D03	—		2605	—	
1D04	—		2701	—	
1E01	—		2702	—	
1E02	—		2703	—	
2001	—		2801	—	
2002	—		2802	—	
2003	—		2803	—	
2004	—		2804	—	
2005	—		2805	—	
2006	—		2806	—	
2101	—		2901	—	
2102	—		2902	—	
2103	—		2903	—	
2104	—		2904	—	
2105	—		2905	—	
2201	—		2906	—	
2202	—		2A01	—	
2203	—		2A02	—	
2204	—		2A03	—	
2205	—		2B01	—	
2206	—		2B02	—	
2207	—		2C01	—	
2301	—		2C02	—	
2302	—		2D01	—	
2401	—		2E01	—	

Error codes	Description	Refer to:	Error codes	Description	Refer to:
2E02	—		3A00	—	
2E03	—		4000	The number of rotations of the drum unit is reaching the upper limit.	2-38
2E04	—		4001	—	
2E05	—		4002	—	
2E06	—		4003	—	
2E07	—		4004	—	
2E08	—		4200	The number of rotations of the drum unit has reached the upper limit. (Printing does not stop.)	2-38
2E0A	—		4201	—	
2F01	—		4202	—	
2F02	—		4203	—	
2F03	—		4204	—	
2F04	—		4208	—	
2F05	—		4300	—	
2F06	—		4400	—	
2F07	—		4408	—	
2F08	—		4500	—	
2F0A	—		4600	—	
3001	—		4700	—	
3002	—		4800	—	
3003	—		4900	—	
3102	—		4A00	—	
3202	—		4B01	Dot count or develop roller counter of the toner is reaching the upper limit.	2-38
3301	—		4B02	—	
3302	—		4B03	—	
3401	—		4B04	—	
3402	—		4C01	Dot count or develop roller counter of the toner has reached the upper limit in the toner stop mode.	2-39
3501	—		4C02	—	
3601	—		4C03	—	
3701	—		4C04	—	
3702	—		4C05	—	
3703	—		4D01	Dot count or develop roller counter of the toner has reached the upper limit in the toner continuous printing mode.	2-39
3801	—		4E01	The toner cartridge has reached the upper limit in the toner continuous printing mode.	2-39
3802	—		4F01	The new toner sensor could not detect the new toner cartridge correctly.	2-39
3900	—		4F02	—	

Error codes	Description	Refer to:	Error codes	Description	Refer to:
4F03	—		6200	—	
4F04	—		6201	—	
5001	—		6202	—	
5002	—		6203	—	
5003	—		6204	—	
5004	—		6208	—	
5005	—		6209	—	
5100	—		620A	—	
5200	—		6300	—	
5301	—		6400	—	
5302	—		6602	—	
5401	—		6701	—	
5402	—		6801	The side thermistor of the fuser unit or the internal temperature sensor detected a temperature higher than the specified value.	2-41
5406	—		6802	—	
5502	—		6901	An error occurred in the fuser unit when the power switch was turned ON or sleep mode was released.	2-42
5602	—		6902	Rechecking the error after the power switch was turned OFF and then ON again because an error was detected in the fuser unit. (This message is displayed for approximately 15 minutes when the machine is restarted after error code 6901 has occurred.)	2-42
5702	—		6A00	Detected discharge that may be attributable to dirty corona wire on the drum unit.	2-43
5801	—		6B01	—	
5802	—		6B02	—	
5902	—		6B03	—	
5A02	—		6B04	—	
5B02	—		6B0A	—	
5C02	—		6C01	—	
6001	The front cover sensor detected that the front cover was open.	2-40	6C02	—	
6002	—		6C03	—	
6003	—		6C04	—	
6004	The eject sensor detected that the fuser cover was open.	2-40	6D00	—	
6007	—		6E00	—	
6101	The new toner sensor detected that the toner cartridge was not set.	2-41	6F00	Detected irregular power supply for less than 100 times.	2-44
6102	—		7000	The eject sensor does not detect paper pass after the registration rear sensor detected the paper pass.	2-44
6103	—		7001	—	
6104	—		7002	—	

Error codes	Description	Refer to:	Error codes	Description	Refer to:
7003	—		7D00	—	
7004	—		7E00	—	
7100	The eject sensor remains ON (paper pass detected) even after the registration rear sensor detected the end of paper pass.	2-45	8000	—	
7101	—		8401	—	
7102	—		8402	—	
7103	—		8501	—	
7104	—		8502	—	
7105	—		8503	—	
7106	—		8504	—	
7200	—		8505	—	
7300	When printing from the paper tray, the registration front sensor does not detect paper pass within the specified time after the paper feed sensor detected paper pass.	2-45	8506	—	
7301	—		8507	—	
7400	—		8508	—	
7401	—		8601	—	
7501	—		8602	—	
7502	—		8603	—	
7601	—		8604	—	
7602	—		8701	—	
7700	The registration front sensor does not detect paper pass within the specified time after the first side was printed in duplex printing mode.	2-46	8702	—	
7701	—		8703	—	
7702	—		8801	—	
7703	—		8802	—	
7704	—		8901	—	
7705	—		8902	—	
7801	—		8903	The back cover/duplex tray sensor detected that the cover was open when duplex printing is started. (Before registering printing data to engine)	2-47
7802	—		8904	The back cover/duplex tray sensor detected that the cover was open during duplex printing. (After registering printing data to engine)	2-47
7900	—		8A01	The registration rear sensor detected that the paper fed was smaller or larger than the specified size in duplex printing mode.	2-47
7C00	The eject sensor was ON when the power switch was turned ON.	2-46	8A02	—	

Error codes	Description	Refer to:	Error codes	Description	Refer to:
8C00	There is no paper set in the manual feed slot on the manual feed slot fix mode.	2-48	9404	—	
8D01	—		9501	—	
8D02	—		9502	—	
8E01	The paper size setting for the machine is other than A4, Letter, Legal or Folio when receiving fax.	2-48	9503	—	
8E02	Detected that the size of the paper set to paper tray was over 10 mm shorter than letter size when receiving fax or printing a list/report.	2-48	9504	—	
8E03	—		9505	—	
8F01	—		9601	—	
8F02	—		9608	—	
8F03	—		9701	A tray set to duplex printing-incompatible size was specified in duplex printing.	2-50
9001	—		9702	—	
9002	When printing from the paper tray, the size of paper set in the paper tray does not match the size specified by the driver.	2-49	9703	—	
9003	—		9704	—	
9004	—		9705	—	
9005	—		9801	—	
9102	—		9802	—	
9103	—		9803	—	
9104	—		9804	—	
9105	—		9901	—	
9200	—		9902	—	
9301	—		9903	—	
9302	When printing from the paper tray, the paper feed sensor detected that there was no paper set in the paper tray.	2-49	9A01	—	
9303	—		9A02	—	
9304	—		9A03	—	
9305	—		9C01	—	
9306	—		9C02	—	
9307	Detected that paper has run out during receiving fax or printing a list/report.	2-49	9C03	—	
9401	—		9C06	—	
9402	—		9C07	—	
9403	—		A000	Image processing cannot be completed correctly because the number of pixels required for image processing is insufficient in the scanned data for the second side of the document.	2-50

Error codes	Description	Refer to:	Error codes	Description	Refer to:
A200	The first side document scanning position sensor detected that the document length was 90 cm or longer while scanning the document.	2-50	BC00	When scanning the fax, white or black correction data for the second side CIS was not within the correct range. (Second time)	2-54
A300	The first side document scanning position sensor has not detected the top of the document even after the document has been fed for the specified distance.	2-51	BD00	A black level not within the standard was scanned when function code 55 was executed.	2-54
A400	The ADF cover sensor detected that the ADF cover was open.	2-51	BE00	—	
A500	When scanning the fax, white or black correction data for the first side CIS was not within the correct range. (First time)	2-52	BF00	The first side document scanning position sensor detected that the ADF was unable to duplex-feed the document because the document is 400 mm or longer.	2-55
A600	When scanning the fax, white or black correction data for the first side CIS was not within the correct range. (Second time)	2-52	C001	—	
A700	Color parameter in the ROM does not match the first side CIS or second side CIS.	2-52	C002	—	
A800	—		C003	—	
A900	—		C004	—	
AA00	—		C700	There is insufficient memory to expand PC print data.	2-55
AB00	—		C800	The memory size allotted for Secure print was exceeded when saving Secure print data.	2-55
AC00	When scanning the fax, white or black correction data for the second side CIS was not within the correct range. (First time)	2-52	C900	—	
AD00	Image processing cannot be completed correctly because the number of pixels required for image processing is insufficient in the scanned data for the first side of the document.	2-53	CA00	—	
AF00	Home position is still being detected even after the first side CIS was moved.	2-53	D100	An error occurred while initializing the modem.	2-55
B000	Detected that the first side CIS flat cable or second side CIS flat cable was not inserted correctly when function code 55 was executed.	2-53	D200	Detected the modem PCB was not connected.	2-56
B300	—		D800	An error occurred while initializing the touch panel.	2-56
B400	—		D900	Communication between the panel PCB and main PCB was unable while initializing the touch panel.	2-56
B700	—		DA00	There was no response from the panel PCB for the specified time after initializing the panel PCB.	2-56
B800	—		DB00	—	
B900	—		E000	An error occurred in the ROM check sum.	2-57
BA00	—		E100	Program error	2-57
BB00	A white level not within the standard was scanned when function code 55 was executed.	2-54	E400	—	

Error codes	Description	Refer to:	Error codes	Description	Refer to:
E500	An error occurred during access to the DRAM in the main PCB ASSY.	2-57	FB06	—	
E600	Write error in the EEPROM of the main PCB ASSY	2-57	FB07	—	
E701	Irregular operation of the flash ROM file system on the main PCB.	2-57	FB08	—	
E702	Read error in the flash ROM on the main PCB	2-57	FB09	—	
E900	—		FB0A	—	
EC00	—		FB0B	—	
F900	The country code was not entered correctly.	2-57	FB0C	—	
FA01	—		FB0D	—	
FA02	—		FB0F	—	
FA03	—		FC01	—	
FB01	—		FC02	—	
FB02	—		FC03	—	
FB03	—		FC04	—	
FB04	—		FC05	—	
FB05	—				

Confidential

3.2 Error Messages

3.2.1 2-line display LCD models

Error Messages		Description	Error codes	Refer to:
Upper line	Lower line			
Access Denied	Function Locked	Failed in print limit ID authentification on PC print or PC print is forbidden.	---	2-85
	Function Locked. Job Deleted. Press Stop.	Failed in print limit ID authentification on Secure print or PC print is forbidden.	---	2-85
Cartridge Error	Put the Toner Cartridge back in.	The new toner sensor could not detect the new toner cartridge correctly.	4F01	2-39
Cooling Down	Wait for a while	The side thermistor of the fuser unit or the internal temperature sensor detected a temperature higher than the specified value.	6801	2-41
Cover is Open	Close the ADF Cover, then press the Stop Key.	The ADF cover sensor detected that the ADF cover was open.	A400	2-51
	Close the Front Cover.	The front cover sensor detected that the front cover was open.	6001	2-40
	Close the Fuser Cover which can be found behind the Back Cover of the machine.	The eject sensor detected that the fuser cover was open.	6004	2-40
	Make sure there is no paper jammed inside the machine and close the Back Cover, then press Start.	The eject sensor was ON when the power switch was turned ON.	7C00	2-46
Document Jam	Clear the scanner jam, then press the Stop Key.	The first side document scanning position sensor detected that the document length was 90 cm or longer while scanning the document.	A200	2-50
		The first side document scanning position sensor has not detected the top of the document even after the document has been fed for the specified distance.	A300	2-51
Drum !	Slide the Green tab on Drum Unit.	Detected discharge that may be attributable to dirty corona wire on the drum unit.	6A00	2-43
Drum End Soon	—	The number of rotations of the drum unit is reaching the upper limit.	4000	2-38
Jam 2-sided	Pull out the Duplex Tray at the back of the machine and remove the jammed paper.	The registration front sensor does not detect paper pass within the specified time after the first side was printed in duplex printing mode.	7700	2-46

Error Messages		Description	Error codes	Refer to:
Upper line	Lower line			
Jam Inside	Open the Front Cover, pull out the Drum Unit completely and remove the jammed paper.	The eject sensor does not detect paper pass after the registration rear sensor detected the paper pass.	7000	2-44
Jam Rear	Open the Back Cover and remove the jammed paper, then press Start.	The eject sensor remains ON (paper pass detected) even after the registration rear sensor detected the end of paper pass.	7100	2-45
Jam Tray	Remove the jammed paper from Tray.	When printing from the paper tray, the registration front sensor does not detect paper pass within the specified time after the paper feed sensor detected paper pass.	7300	2-45
Machine Error **	—	A machine error occurred. Refer to the error code “**”.	---	---
Manual Feed	Load paper.	There is no paper set in the manual feed slot on the manual feed slot fix mode.	8C00	2-48
No Access Point	—	Cannot connect to access point.	---	4.5.2
No Paper	Load paper.	When printing from the paper tray, the paper feed sensor detected that there was no paper set in the paper tray.	9302	2-49
No Toner	Open the Front Cover, then install the Toner Cartridge.	The new toner sensor detected that the toner cartridge was not set.	6101	2-41
Out of Memory	Press Stop Key.	There is insufficient memory to expand PC print data.	C700	2-55
Print Data Full	Print Data is full. Press Stop and delete the previously stored data.	The memory size allotted for Secure print was exceeded when saving Secure print data.	C800	2-55
Print Unable **		Printing error Refer to the error code “**”.	---	---
Replace Drum	—	The number of rotations of the drum unit has reached the upper limit. (Printing does not stop.)	4200	2-38
Replace Toner	Open the Front Cover, replace Toner Cartridge.	Dot count or develop roller counter of the toner has reached the upper limit in the toner stop mode.	4C01	2-39
	—	Dot count or develop roller counter of the toner has reached the upper limit in the toner continuous printing mode.	4D01	2-39
Scan Unable **		Scanning error Refer to the error code “**”.	---	---

Error Messages		Description	Error codes	Refer to:
Upper line	Lower line			
Scanner Error	—	Detected that the first side CIS flat cable or second side CIS flat cable was not inserted correctly when function code 55 was executed.	B000	2-53
		A white level not within the standard was scanned when function code 55 was executed.	BB00	2-54
		A black level not within the standard was scanned when function code 55 was executed.	BD00	2-54
Self-Diagnostic	Turn the power off, then on again. Leave the machine for 15 min.	An error occurred in the fuser unit when the power switch was turned ON or sleep mode was released.	6901	2-42
	Will Automatically Restart within 15 minutes.	Rechecking the error after the power switch was turned OFF and then ON again because an error was detected in the fuser unit. (This message is displayed for approximately 15 minutes when the machine is restarted after error code 6901 has occurred.)	6902	2-42
Size Error DX	Press Stop key. Specify the correct paper and load the same size paper as the Printer driver setting.	A tray set to duplex printing-incompatible size was specified in duplex printing.	9701	2-50
	Specify the correct paper.	The registration rear sensor detected that the paper fed was smaller or larger than the specified size in duplex printing mode.	8A01	2-47
Size mismatch	Fax received. Set correct paper size in menu.	The paper size setting for the machine is other than A4, Letter, Legal or Folio when receiving fax.	8E01	2-48
	Reload correct paper, then press Start.	Detected that the size of the paper set to paper tray was over 10 mm shorter than letter size when receiving fax or printing a list/ report.	8E02	2-48
		When printing from the paper tray, the size of paper set in the paper tray does not match the size specified by the driver.	9002	2-49
Toner Ended	Open the Front Cover, replace Toner Cartridge.	The toner cartridge has reached the upper limit in the toner continuous printing mode.	4E01	2-39
Toner Low	—	Dot count or develop roller counter of the toner is reaching the upper limit.	4B01	2-38

Error Messages		Description	Error codes	Refer to:
Upper line	Lower line			
2-sided Disabled	Close the Back Cover of the machine.	The back cover/duplex tray sensor detected that the cover was open when duplex printing is started. (Before registering printing data to engine)	8903	2-47
		The back cover/duplex tray sensor detected that the cover was open during duplex printing. (After registering printing data to engine)	8904	2-47

3.2.2 Touch panel models

Error Messages		Description	Error codes	Refer to:
Upper line	Lower line			
Access Denied	Function Locked	Failed in print limit ID authentification on PC print or PC print is forbidden.	---	2-85
	Function Locked. Job Deleted. Press Stop [X].	Failed in print limit ID authentification on Secure print or PC print is forbidden.	---	2-85
Cartridge Error	Put the Toner Cartridge back in.	The new toner sensor could not detect the new toner cartridge correctly.	4F01	2-39
Cooling Down	Wait for a while	The side thermistor of the fuser unit or the internal temperature sensor detected a temperature higher than the specified value.	6801	2-41
Cover is Open	Close the ADF Cover.	The ADF cover sensor detected that the ADF cover was open.	A400	2-51
	Close the Front Cover.	The front cover sensor detected that the front cover was open.	6001	2-40
	Close the Back Cover of the machine.	The eject sensor detected that the fuser cover was open.	6004	2-40
	Make sure there is no paper jammed inside the machine and close the Back Cover, then press [Retry].	The eject sensor was ON when the power switch was turned ON.	7C00	2-46
Document Jam	Open the ADF cover and clear the scanner jam, then press Stop[x].	The first side document scanning position sensor detected that the document length was 90 cm or longer while scanning the document.	A200	2-50
		The first side document scanning position sensor has not detected the top of the document even after the document has been fed for the specified distance.	A300	2-51
Drum !	Open the Front Cover and slide the green tab across the Drum Unit several times.	Detected discharge that may be attributable to dirty corona wire on the drum unit.	6A00	2-43
Failed to Set	Make sure the phone line is connected. If connection fails, call phone service company. Press stop[x] if you do not connect a phone line.	Completed auto-detect as line cord remained connected to the external terminal.	---	2-94
Jam 2-sided	Pull out the 2-sided Tray and remove the jammed paper.	The registration front sensor does not detect paper pass within the specified time after the first side was printed in duplex printing mode.	7700	2-46

Error Messages		Description	Error codes	Refer to:
Upper line	Lower line			
Jam Inside	Open the Front Cover, pull out the Drum Unit and remove the jammed paper.	The eject sensor does not detect paper pass after the registration rear sensor detected the paper pass.	7000	2-44
Jam Rear	Open the Back Cover and remove the jammed paper, then press [Retry].	The eject sensor remains ON (paper pass detected) even after the registration rear sensor detected the end of paper pass.	7100	2-45
Jam Tray	Remove the jammed paper from Tray.	When printing from the paper tray, the registration front sensor does not detect paper pass within the specified time after the paper feed sensor detected paper pass.	7300	2-45
Machine Error **	—	A machine error occurred. Refer to the error code “**”.	---	---
Manual Feed	Load Paper in Manual Feed.	There is no paper set in the manual feed slot on the manual feed slot fix mode.	8C00	2-48
No Paper	Reload paper in Tray.	When printing from the paper tray, the paper feed sensor detected that there was no paper set in the paper tray.	9302	2-49
No Toner	Open the Front Cover, then install the Toner Cartridge.	The new toner sensor detected that the toner cartridge was not set.	6101	2-41
Out of Memory	Press stop[x].	There is insufficient memory to expand PC print data.	C700	2-55
Phone line may not be connected	Check line connection. Refer to User's Guide.	Auto-detect ended without detecting the line voltage.	---	2-94
Print Data Full	Print Data is full. Press Stop[x] and delete the previously stored data.	The memory size allotted for Secure print was exceeded when saving Secure print data.	C800	2-55
Print Unable **		Printing error Refer to the error code “**”.	---	---
Replace Toner	Open the Front Cover, replace Toner Cartridge.	Dot count or develop roller counter of the toner has reached the upper limit in the toner stop mode.	4C01	2-39
Scan Unable **		Scanning error Refer to the error code “**”.	---	---
Scanner Error	—	Detected that the first or second side CIS flat cable was not inserted correctly when function code 55 was executed.	B000	2-53
		A white level not within the standard was scanned when function code 55 was executed.	BB00	2-54
		A black level not within the standard was scanned when function code 55 was executed.	BD00	2-54

Error Messages		Description	Error codes	Refer to:
Upper line	Lower line			
Self-Diagnostic	Turn the power off, then on again. Leave the machine for 15 min.	An error occurred in the fuser unit when the power switch was turned ON or sleep mode was released.	6901	2-42
	Will Automatically Restart within 15 minutes.	Rechecking the error after the power switch was turned OFF and then ON again because an error was detected in the fuser unit. (This message is displayed for approximately 15 minutes when the machine is restarted after error code 6901 has occurred.)	6902	2-42
Size Error 2-sided	Press Stop[x]. Specify the correct paper and load the same size paper as Printer driver setting.	The registration rear sensor detected that the paper fed was smaller or larger than the specified size in duplex printing mode.	8A01	2-47
	Specify the correct paper and press [Retry].	A tray set to duplex printing-incompatible size was specified in duplex printing.	9701	2-50
Size mismatch	Fax received. Set correct paper size in menu.	The paper size setting for the machine is other than A4, Letter, Legal or Folio when receiving fax.	8E01	2-48
	Reload correct paper.	Detected that the size of the paper set to paper tray was over 10 mm shorter than letter size when receiving fax or printing a list/ report.	8E02	2-48
	Reload correct paper in Tray, then press [Retry].	When printing from the paper tray, the size of paper set in the paper tray does not match the size specified by the driver.	9002	2-49
Supplies	Drum End Soon	The number of rotations of the drum unit is reaching the upper limit.	4000	2-38
	Replace Drum	The number of rotations of the drum unit has reached the upper limit. (Printing does not stop.)	4200	2-38
	Replace Toner	Dot count or develop roller counter of the toner has reached the upper limit in the toner continuous printing mode.	4D01	2-39
	Toner Low	Dot count or develop roller counter of the toner is reaching the upper limit.	4B01	2-38
Toner Ended	Open the Front Cover, replace Toner Cartridge.	The toner cartridge has reached the upper limit in the toner continuous printing mode.	4E01	2-39
Touchscreen Initialisation Failed	Remove any material which is on the touchscreen.	An error occurred while initializing the touch panel.	D800	2-56

Error Messages		Description	Error codes	Refer to:
Upper line	Lower line			
2-sided Disabled	Close the Back Cover and put the 2-sided Tray back in.	The back cover/duplex tray sensor detected that the cover was open when duplex printing is started. (Before registering printing data to engine)	8903	2-47
		The back cover/duplex tray sensor detected that the cover was open during duplex printing. (After registering printing data to engine)	8904	2-47

3.3 Communication Errors

Code 1	Code 2	Cause	Refer to:
10	07	No document set when calling.	2-96
10	08	Wrong fax number called.	2-96
11	01	No dial tone detected before dialing.	2-96
11	02	Busy tone detected before dialing.	2-96
11	03	2nd dial tone not detected.	2-96
11	05	No loop current detected.	2-96
11	06	Busy tone detected after dialing or receiving a call.	2-96
11	07	No response from the receiver in sending.	2-96
11	10	No tone detected after dialing.	2-96
11	11	No acknowledgement returned after Fax2 net command was sent.	2-96
13	12	Error signal received after Fax2 net command was sent.	2-96
16	09	No Cipher registrated.	2-96
17	01	Called using a dial number that cannot be used for the NGN line (33 digits or longer or non numeric characters).	2-96
17	07	No response from the caller in receiving.	2-96
1C	01	Detected that access to the NGN line was not authorized. (T38: 403 Forbidden)	2-96
1C	02	No file or folder (directory) found as a result of search via the NGN line. (T38: 404 Not Found)	2-96
1C	03	Remote station does not support the NGN line. (T38: 488 Not Acceptable Here)	2-96
1C	04	SIP (Session Initiation Protocol) connection not possible. (T38) USW NGN fax setting is OFF or calling attempted before acquisition of SIP information.	2-96
1C	05	Internal error detected in the communication network. (T38)	2-96
1C	06	SIP Server timeout (T38)	2-96
1C	08	An error other than 1C01,1C02,1C03,1C04,1C06,1D01,1D02 or 1D04 was detected.	2-96
1D	01	Detected that the NGN line was busy. (T38: 486 Busy)	2-96
1D	02	Detected that the NGN line was temporarily unavailable. (T38: 480 Temporarily Unavailable)	2-96
1D	04	Network cable not connected (Link Down detected) or not connected to the Network. (T38)	2-96
20	01	Unable to detect flag field.	2-96
20	02	Carrier was OFF for 200 ms or longer.	2-96

Code 1	Code 2	Cause	Refer to:
20	03	Abort detected ("1" in succession for 7 bits or more).	2-96
20	04	Overrun detected.	2-96
20	05	A frame received for 3 seconds or more.	2-96
20	06	CRC error in answerback.	2-96
20	07	Echo command received.	2-96
20	08	Invalid command received.	2-96
20	09	Command ignored in document setting or damping-out at turn-around transmission.	2-96
20	0A	T5 time-out error	2-96
20	0B	CRP received.	2-96
20	0C	EOR or NULL received.	2-96
20	0D	Corresponding command not received although the FIF command sending bit is ON.	2-96
20	0E	EOR command received.	2-96
20	13	Line disconnected without receiving DCN after receiving the last page. (After receiving EOP and sending CFR, received BYE before receiving DCN.) (T38)	2-96
32	01	Remote terminal only with V.29 capability in 2,400 or 4,800 bps transmission.	2-96
32	02	Remote terminal not ready for polling.	2-96
32	10	Remote terminal not equipped with password function or its password switch is OFF.	2-96
32	11	Remote terminal not equipped with or not ready for confidential mailbox function.	2-96
32	12	Remote terminal not equipped with or not ready for relay broadcasting function.	2-96
32	13	No confidential mail in the remote terminal.	2-96
32	14	Available memory space of the remote terminal is less than that required for reception of confidential mails or relay broad-casting instruction.	2-96
32	15	Remote terminal not equipped with Cipher receiving function.	2-96
32	16	Remote terminal not equipped with SEP function.	2-96
32	17	Remote terminal not equipped with SUB function.	2-96
32	18	Remote terminal not equipped with color function.	2-96
40	02	Illegal coding system requested.	2-96
40	03	Illegal recording width requested.	2-96
40	05	ECM requested although not allowed.	2-96
40	06	Polled while not ready.	2-96

Code 1	Code 2	Cause	Refer to:
40	07	No document to be sent when polled.	2-96
40	10	Nation code or manufacturer code not correct.	2-96
40	11	Group number not registered for relay broad-casting was specified or the number of addressees specified exceeded the maximum allowable number.	2-96
40	12	Retrieval attempted while not ready for retrieval.	2-96
40	13	Polled by any other manufacturers' terminal while waiting for secure polling.	2-96
40	14	Common key not registered although it needs to be used.	2-96
40	15	Red and black receiving was specified while not ready.	2-96
40	16	Cipher receiving was specified while not ready.	2-96
40	17	Invalid resolution selected.	2-96
40	20	Invalid full color mode selected.	2-96
50	01	Vertical resolution capability changed after compensation of background color.	2-96
63	01	"Password + last 4 digits of telephone number" does not much.	2-96
63	02	Password not correct	2-96
63	03	Polling ID not correct	2-96
63	04	Specified confidential ID and MailBox ID do not match.	2-96
63	05	Relay broad-casting ID not correct	2-96
63	06	Specified Retrieval ID and MailBox Retrieval ID do not match.	2-96
63	07	Select receiving ID not correct	2-96
63	08	Cipher Key not correct	2-96
74	XX	DCN received	2-96
80	01	Fallback impossible.	2-96
90	01	Unable to detect video signals or commands within 6 seconds after CFR is transmitted.	2-96
90	02	Received PPS containing invalid page count or block count.	2-96
A0	03	Error correction sequence not terminated even at final transmission speed after fallback.	2-96
A0	11	Receive buffer empty (5-second time-out)	2-96
A0	12	Receive buffer full during operation except receiving into memory.	2-96
A0	13	Decoding error continued on 500 lines or more.	2-96
A0	14	Decoding error continued for 15 seconds or more.	2-96
A0	15	Time-out: 13 seconds or more for one-line transmission.	2-96

Code 1	Code 2	Cause	Refer to:
A0	16	RTC not found or carrier OFF detected for 6 seconds.	2-96
A0	17	RTC found but no command detected for 60 seconds or longer.	2-96
A0	19	No video data to be sent.	2-96
A0	20	Cannot continue receiving color fax (remaining ink low).	2-96
A8	01	RTN, PIN, or ERR received (sending terminal).	2-96
A9	01	RTN, PIN, or ERR sent (receiving terminal).	2-96
AA	18	Receive buffer full during receiving data into memory.	2-96
B0	01	Polarity reversion detected.	2-96
B0	02	Unable to receive the next-page data.	2-96
B0	03	Unable to receive polling during turn-around transmission due to call reservation.	2-96
B0	04	PC interface error	2-96
C0	01	No common modulation mode or failed to poll.	2-96
C0	02	Unable to detect JM.	2-96
C0	03	Unable to detect CM.	2-96
C0	04	Unable to detect CJ.	2-96
C0	10	Cannot finish V. 34 negotiation or training.	2-96
C0	11	Modem error detected during V. 34 negotiation or training.	2-96
C0	20	Modem error detected while sending commands.	2-96
C0	21	Modem error detected while receiving commands.	2-96
C0	22	Control channel connection time-out.	2-96
C0	30	Modem error detected while sending video signals.	2-96
C0	31	Modem error detected while receiving video signals.	2-96
E0	01	Failed to detect 1,300 Hz signal in burn-in operation.	2-96
E0	02	Failed to detect PB signals in burn-in operation.	2-96
E0	03	Unable to detect commands in burn-in operation when RS232C is used.	2-96

Confidential

4. TROUBLESHOOTING

4.1 Error Cause and Remedy

This page shows LCD display for models without touch panel. It may differ from display shown on models with touch panel.

■ Error code 0201

Print Unable 02
Turn the power off and then back on again.

Cannot detect the synchronized signal of the main motor. The speed of the main motor does not stabilize within the specified time.

Step	Cause	Remedy
1	Connection failure of the main motor flat cable	Reconnect the main motor flat cable.
2	Connection failure of the LVPS harness	Reconnect the LVPS harness.
3	Damaged fuser gear	Replace the fuser gear.
4	Main motor failure	Replace the main motor.
5	Damaged fuser unit	Replace the fuser unit.
6	Low-voltage power supply PCB failure	Replace the low-voltage power supply PCB ASSY.
7	Damaged part in motor drive sub ASSY	Replace the main frame L ASSY.
8	Main PCB failure	Replace the main PCB ASSY.

■ Error code 0300

Print Unable 03
Turn the power off and then back on again.

Cannot detect the lock signal of the polygon motor for the laser unit (second time).

Error code 0305

-

Cannot detect the lock signal of the polygon motor for the laser unit (first time).

Error code 0401

Print Unable 04
Turn the power off and then back on again.

Cannot detect the synchronized signal of the polygon motor for the laser unit (second time).

Error code 0405

-

Cannot detect the synchronized signal of the polygon motor for the laser unit (first time).

Step	Cause	Remedy
1	Connection failure of the laser unit flat cable	Reconnect the laser unit flat cable.
2	Laser unit flat cable failure	Replace the laser unit flat cable.
3	Laser unit failure	Replace the laser unit.
4	Main PCB failure	Replace the main PCB ASSY.

■ Error code 0501

Print Unable 05
Turn the power off and then back on again.

The center thermistor of the fuser unit has not reached the specified temperature within the specified time.

Error code 0502

Print Unable 05
Turn the power off and then back on again.

The center thermistor of the fuser unit has not reached the specified temperature within the specified time after it was heated normally to the certain level.

Error code 0503

Print Unable 05
Turn the power off and then back on again.

The center thermistor of the fuser unit detected a temperature higher than the specified value.

Error code 0504

Print Unable 05
Turn the power off and then back on again.

After the heat unit was heated normally, the center thermistor of the fuser unit detected a temperature lower than the specified value.

Error code 0505

Print Unable 05
Turn the power off and then back on again.

The center thermistor of the fuser unit detected a temperature rise greater than the specified value within the specified time.

Error code 0506

Print Unable 05
Turn the power off and then back on again.

The center thermistor of the fuser unit detected a temperature fall greater than the specified value within the specified time.

<User Check>

- Turn OFF the power switch. After several seconds, turn ON the power again and check that this error is reset.

Step	Cause	Remedy
1	Connection failure of the center or side thermistor harness of the fuser unit	Reconnect the center or side thermistor harness of the fuser unit.
2	Connection failure of the fuser unit heater harness	Reconnect the fuser unit heater harness.
3	Connection failure of the eject sensor PCB flat cable	Reconnect the eject sensor PCB flat cable.
4	Connection failure of the LVPS harness	Reconnect the LVPS harness.
5	Eject sensor PCB failure	Replace the eject sensor PCB ASSY.
6	Fuser unit failure	Replace the fuser unit.
7	Low-voltage power supply PCB failure	Replace the low-voltage power supply PCB ASSY.
8	Main PCB failure	Replace the main PCB ASSY.

■ Error code 050A

Print Unable 05
Turn the power off and then back on again.

The hardware detected a temperature error through the center thermistor or the side thermistor of the fuser unit.

Error code 050B

Print Unable 05
Turn the power off and then back on again.

When the center thermistor of the fuser unit was lower than the idle temperature, the side thermistor detected a temperature higher than the specified temperature.

Error code 050C

Print Unable 05
Turn the power off and then back on again.

When the center thermistor of the fuser unit was higher than the idle temperature, the side thermistor detected a temperature lower than the specified temperature.

Error code 050F

Print Unable 05
Turn the power off and then back on again.

An error occurred in the fuser unit.

<User Check>

- Turn OFF the power switch. After several seconds, turn ON the power again and check that this error is reset.

Step	Cause	Remedy
1	Connection failure of the center or side thermistor harness of the fuser unit	Reconnect the center or side thermistor harness of the fuser unit.
2	Connection failure of the fuser unit heater harness	Reconnect the fuser unit heater harness.
3	Connection failure of the eject sensor PCB flat cable	Reconnect the eject sensor PCB flat cable.
4	Connection failure of the LVPS harness	Reconnect the LVPS harness.
5	Eject sensor PCB failure	Replace the eject sensor PCB ASSY.
6	Fuser unit failure	Replace the fuser unit.
7	Low-voltage power supply PCB failure	Replace the low-voltage power supply PCB ASSY.
8	Main PCB failure	Replace the main PCB ASSY.

■ Error code 0600

Print Unable 06
Turn the power off and then back on again.

A communication error occurred between the ASIC controlled by engine and the motor driver.

Step	Cause	Remedy
1	Main PCB failure	Replace the main PCB ASSY.

■ Error code 0800

Print Unable 08
Turn the power off and then back on again.

An error occurred in the internal temperature sensor.

Step	Cause	Remedy
1	Internal temperature sensor failure	Replace the main frame L ASSY.
2	Main PCB failure	Replace the main PCB ASSY.

■ Error code 0900

Print Unable 09
Turn the power off and then back on again.

Detected irregular power supply for more than 100 times.

<User Check>

- Turn OFF the power switch. After several seconds, turn ON the power again and check that this error is reset.

Step	Cause	Remedy
1	Low-voltage power supply PCB failure	Replace the low-voltage power supply PCB ASSY. Refer to "1.3.29 Reset irregular power supply detection counter of low-voltage power supply PCB (function code: 88)" in Chapter 5 to reset the irregular power supply detection counter.
2	Main PCB failure	Replace the main PCB ASSY.

Note:

- The irregular power supply detection error of the low-voltage power supply PCB (error code: 0900) occurs when there is a large distortion in the power supply voltage supplied to the machine. In this case, if the same power supply is used, the same error may occur even when the low-voltage power supply PCB ASSY is replaced. Ask the user to review the installation environment.

■ Error code 0A02

Print Unable 0A
Turn the power off and then back on again.

Detected a fan failure.

Step	Cause	Remedy
1	Connection failure of the fan harness	Reconnect the fan harness.
2	Connection failure of the HVPS flat cable	Reconnect the HVPS flat cable.
3	Fan failure	Replace the fan.
4	Low-voltage power supply PCB failure	Replace the low-voltage power supply PCB ASSY.
5	High-voltage power supply PCB failure	Replace the high-voltage power supply PCB ASSY.
6	Main PCB failure	Replace the main PCB ASSY.

■ Error code 0B01

Print Unable 0B
Turn the power off and then back on again.

An error occurred in the high-voltage power supply PCB ASSY while operating.

Error code 0B02

Print Unable 0B
Turn the power off and then back on again.

An error occurred in the high-voltage power supply PCB ASSY when the machine was in the ready state.

<User Check>

- Replace the drum unit.

Step	Cause	Remedy
1	Connection failure of the HVPS flat cable	Reconnect the HVPS flat cable.
2	High-voltage power supply PCB failure	Replace the high-voltage power supply PCB ASSY.
3	Main PCB failure	Replace the main PCB ASSY.

■ Error code 4000

Drum End Soon **-**

The number of rotations of the drum unit is reaching the upper limit.

Error code 4200

Replace Drum **-**

The number of rotations of the drum unit has reached the upper limit. (Printing does not stop.)

<User Check>

- Prepare a new drum unit.

Step	Cause	Remedy
1	Replace the drum unit with a new one and reset the drum counter. If the error display is not cleared, the main PCB is faulty.	Replace the main PCB ASSY.

■ Error code 4B01

Toner Low **-**

Dot count or develop roller counter of the toner is reaching the upper limit.

<User Check>

- Prepare a new toner cartridge.

Step	Cause	Remedy
1	Main PCB failure	Replace the main PCB ASSY.

■ Error code 4C01

Replace Toner
Open the Front Cover, replace Toner Cartridge.

Dot count or develop roller counter of the toner has reached the upper limit in the toner stop mode.

Error code 4D01

Replace Toner
-

Dot count or develop roller counter of the toner has reached the upper limit in the toner continuous printing mode.

Error code 4E01

Toner Ended
Open the Front Cover, replace Toner Cartridge.

The toner cartridge has reached the upper limit in the toner continuous printing mode.

<User Check>

- Replace the toner cartridge which has reached the upper limit.

Step	Cause	Remedy
1	If the error display is not cleared after replacing the toner cartridge with a new one, the main PCB is faulty.	Replace the main PCB ASSY.

■ Error code 4F01

Cartridge Error
Put the Toner Cartridge back in.

The new toner sensor could not detect the new toner cartridge correctly.

<User Check>

- Replace the toner cartridge with a new one again.
- If the machine is on the uneven surface, place it on a level surface.

Step	Cause	Remedy
1	Connection failure of the new toner sensor PCB flat cable	Reconnect the new toner sensor PCB flat cable.
2	New toner actuator coming off or caught in sections of the machine	Reattach the new toner actuator.
3	Develop joint coming off or caught in sections of the machine	Reattach the develop joint.
4	New toner sensor failure	Replace the new toner sensor PCB ASSY.
5	If the error display is not cleared after replacing the toner cartridge with a new one, the main PCB is faulty.	Replace the main PCB ASSY.

■ Error code 6001

Cover is Open
Close the Front Cover.

The front cover sensor detected that the front cover was open.

<User Check>

- Close the front cover.

Step	Cause	Remedy
1	Front cover failure	Replace the front cover.
2	Front cover sensor failure	Replace the high-voltage power supply PCB ASSY.
3	Main PCB failure	Replace the main PCB ASSY.

■ Error code 6004

Cover is Open
Close the Fuser Cover which can be found behind the Back Cover of the machine.

The eject sensor detected that the fuser cover was open.

<User Check>

- Close the fuser cover.

Step	Cause	Remedy
1	Eject actuator coming off or caught in sections of the machine	Reattach the eject actuator.
2	Fuser cover attachment failure	Reattach the fuser cover.
3	Connection failure of the eject sensor PCB flat cable	Reconnect the eject sensor PCB flat cable.
4	Eject sensor PCB failure	Replace the eject sensor PCB ASSY.
5	Main PCB failure	Replace the main PCB ASSY.

■ Error code 6101

No Toner
Open the Front Cover, then install Toner Cartridge.

The new toner sensor detected that the toner cartridge was not set.

<User Check>

- Set the toner cartridge correctly.
- Replace the toner cartridge with a new one.

Step	Cause	Remedy
1	New toner actuator coming off	Reattach the new toner actuator.
2	Connection failure of the new toner sensor PCB flat cable	Reconnect the new toner sensor PCB flat cable.
3	New toner sensor PCB failure	Replace the new toner sensor PCB ASSY.
4	Main PCB failure	Replace the main PCB ASSY.

■ Error code 6801

Cooling Down
Wait for a while

The side thermistor of the fuser unit or the internal temperature sensor detected a temperature higher than the specified value.

<User Check>

- Lower the room temperature.
- Keep the machine away from heating appliances.

Step	Cause	Remedy
1	Side thermistor failure	Replace the fuser unit.
2	Main PCB failure	Replace the main PCB ASSY.

■ Error code 6901

Self-Diagnostic
Turn the power off, then on again. Leave the machine for 15 min.

An error occurred in the fuser unit when the power switch was turned ON or sleep mode was released.

Error code 6902

Self-Diagnostic
Will Automatically Restart within 15 minutes.

Rechecking the error after the power switch was turned OFF and then ON again because an error was detected in the fuser unit.

(This message is displayed for approximately 15 minutes when the machine is restarted after error code 6901 has occurred.)

Step	Cause	Remedy
1	Connection failure of each fuser unit harness	Reconnect each harness of the fuser unit.
2	Connection failure of the eject sensor PCB flat cable	Reconnect the eject sensor PCB flat cable.
3	Fuser unit failure	Replace the fuser unit.
4	Eject sensor PCB failure	Replace the eject sensor PCB ASSY.
5	Low-voltage power supply PCB failure	Replace the low-voltage power supply PCB ASSY.
6	Main PCB failure	Replace the main PCB ASSY.

Note:
- Turn OFF the power switch. After the fuser unit has cooled sufficiently, turn ON the power switch again and leave the machine for 15 minutes. This problem may then be cleared.
- To release the fuser unit error after taking appropriate measures, enter the maintenance mode once and quit it with the function code 99.

■ Error code 6A00

Drum ! **Slide the Green tab on Drum Unit.**

Detected discharge that may be attributable to dirty corona wire on the drum unit.

<User Check>

- Slide the green tab of the drum unit to left and right for two to three times to clean the corona wire.
- Clean the terminal of the drum unit.
- Replace the drum unit.

Step	Cause	Remedy
1	Dirt on the high-voltage power supply PCB terminal	Clean the electrodes of the machine.
2	High voltage electrodes attachment failure	Check if the problem disappears after pressing each electrode. If not, reattach the electrodes.
3	High-voltage power supply PCB failure	Replace the high-voltage power supply PCB ASSY.
4	Main PCB failure	Replace the main PCB ASSY.

■ Electrodes location of the toner cartridge and drum unit

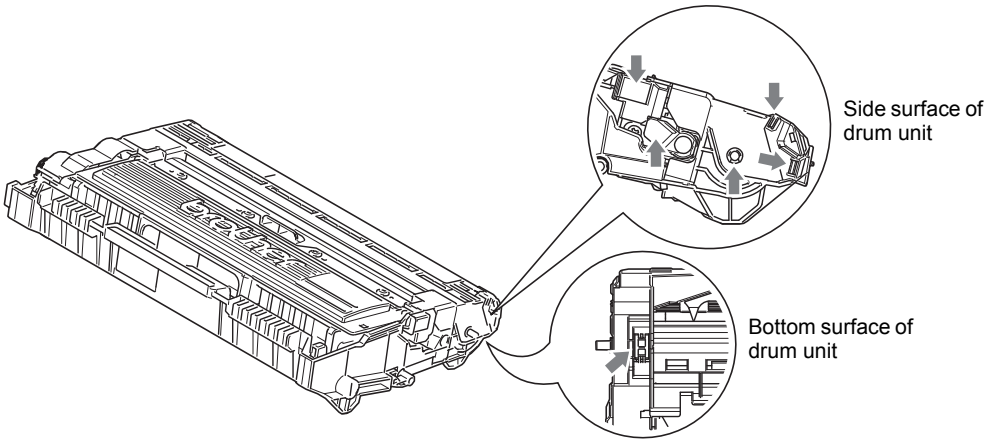

Fig. 2-8

■ Electrodes location of the machine

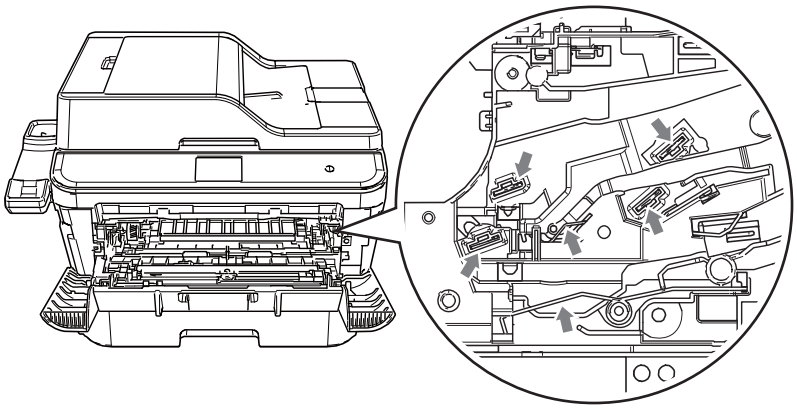

Fig. 2-9

■ Error code 6F00

Print Unable ZC
Turn the power off and then back on again.

Detected irregular power supply for less than 100 times.

<User Check>

- Turn the power switch OFF and then back ON again.
- Put a filter into the power supply.
- Install a voltage stabilizer to the power supply unit.

■ Error code 7000

Jam Inside
Open the Front Cover, pull out the Drum Unit completely and remove the jammed paper.

The eject sensor does not detect paper pass after the registration rear sensor detected the paper pass.

<User Check>

- Remove the jammed paper.

Step	Cause	Remedy
1	Foreign object inside the machine	Remove the foreign object.
2	Connection failure of the eject sensor PCB flat cable	Reconnect the eject sensor PCB flat cable.
3	Eject actuator coming off or caught in sections of the machine	Reattach the eject actuator.
4	Fuser cover attachment failure	Reattach the fuser cover.
5	Eject sensor failure	Replace the eject sensor PCB ASSY.
6	Fuser unit failure	Replace the fuser unit.
7	Damaged gears in the feeding system	Replace the main frame L ASSY.
8	Main PCB failure	Replace the main PCB ASSY.

■ Error code 7100

Jam Rear
Open the Back Cover and remove the jammed paper, then press Start.

The eject sensor remains ON (paper pass detected) even after the registration rear sensor detected the end of paper pass.

<User Check>

- Remove the jammed paper.
- Check if the back cover is open during duplex printing.

Step	Cause	Remedy
1	Foreign object in the rear of the machine	Remove the foreign object.
2	Eject actuator caught in sections of the machine	Reattach the eject actuator.
3	Fuser cover attachment failure	Reattach the fuser cover.
4	Eject sensor failure	Replace the eject sensor PCB ASSY.
5	Fuser unit failure	Replace the fuser unit.
6	Damaged gears in the feeding system	Replace the main frame L ASSY.
7	Main PCB failure	Replace the main PCB ASSY.

■ Error code 7300

Jam Tray
Remove the jammed paper from Tray.

When printing from the paper tray, the registration front sensor does not detect paper pass within the specified time after the paper feed sensor detected paper pass.

<User Check>

- Remove the jammed paper.
- Close the paper tray correctly.

Step	Cause	Remedy
1	Foreign object in the front section of the paper tray	Remove the foreign object.
2	Paper dust cleaning roller attachment failure	Reattach the paper dust cleaning roller.
3	Connection failure of the registration front/rear sensor PCB harness	Reconnect the registration front/rear sensor PCB harness.
4	Connection failure of the HVPS flat cable	Reconnect the HVPS flat cable.
5	Registration front actuator coming off or caught in some sections of the machine	Reattach the registration front actuator.
6	HVPS flat cable breakage	Replace the HVPS flat cable.
7	Registration front sensor failure	Replace the registration front/rear actuator holder ASSY.
8	High-voltage power supply PCB failure	Replace the high-voltage power supply PCB ASSY.
9	Damaged gears in the feeding system	Replace the main frame L ASSY.
10	Main PCB failure	Replace the main PCB ASSY.

■ Error code 7700

Jam 2-sided
Pull out the Duplex Tray at the back of the machine and remove the jammed paper.

The registration front sensor does not detect paper pass within the specified time after the first side was printed in duplex printing mode.

<User Check>

- Remove the jammed paper.
- Close the back cover correctly.
- Close the paper tray correctly.

Step	Cause	Remedy
1	Foreign object in the duplex paper feed system	Remove the foreign object.
2	Foreign object in the duplex paper feed system of the paper tray	Remove the foreign object.
3	Back cover attachment failure	Reattach the back cover.
4	Fuser cover attachment failure	Reattach the fuser cover.
5	Duplex tray failure	Replace the duplex tray.
6	Damaged gears in the feeding system	Replace the main frame L ASSY.
7	Main PCB failure	Replace the main PCB ASSY.

■ Error code 7C00

Cover is Open
Make sure there is no paper jammed inside the machine and close the Back Cover, then press Start.

The eject sensor was ON when the power switch was turned ON.

<User Check>

- Close the back cover correctly.

Step	Cause	Remedy
1	Eject actuator caught in sections of the machine	Reattach the eject actuator.
2	Fuser cover attachment failure	Reattach the fuser cover.
3	Back cover attachment failure	Reattach the back cover.
4	Eject sensor failure	Replace the eject sensor PCB ASSY.
5	Main PCB failure	Replace the main PCB ASSY.

■ Error code 8903

2-sided Disabled
Close the Back Cover of the machine.

The back cover/duplex tray sensor detected that the cover was open when duplex printing is started. (Before registering printing data to engine)

Error code 8904

2-sided Disabled
Close the Back Cover of the machine.

The back cover/duplex tray sensor detected that the cover was open during duplex printing. (After registering printing data to engine)

<User Check>

- Close the back cover correctly.

Step	Cause	Remedy
1	Back cover/duplex tray sensor attachment failure	Reattach the back cover/duplex tray sensor.
2	Boss to push the back cover/ duplex tray sensor is broken.	Replace the back cover.
3	Back cover/duplex tray sensor failure	Replace the eject sensor PCB ASSY.
4	Main PCB failure	Replace the main PCB ASSY.

■ Error code 8A01

Size Error DX
Specify the correct paper.

The registration rear sensor detected that the paper fed was smaller or larger than the specified size in duplex printing mode.

<User Check>

- Use appropriate paper (Letter to Legal).

Step	Cause	Remedy
1	Registration rear actuator caught in some sections of the machine	Reattach the registration rear actuator.
2	Registration rear sensor failure	Replace the registration front/rear actuator holder ASSY.
3	Main PCB failure	Replace the main PCB ASSY.

■ Error code 8C00

Manual Feed
Load paper.

There is no paper set in the manual feed slot on the manual feed slot fix mode.

<User Check>

- Set paper in the manual feed slot.

Step	Cause	Remedy
1	Registration front actuator caught in some sections of the machine	Reattach the registration front actuator.
2	Connection failure of the registration rear sensor harness	Reconnect the registration front/rear sensor PCB harness.
3	Connection failure of the HVPS flat cable	Reconnect the HVPS flat cable.
4	HVPS flat cable breakage	Replace the HVPS flat cable.
5	Registration rear sensor failure	Replace the registration front/rear actuator holder ASSY.
6	High-voltage power supply PCB failure	Replace the high-voltage power supply PCB ASSY.
7	Main PCB failure	Replace the main PCB ASSY.

■ Error code 8E01

Size mismatch
Fax received. Set correct paper size in menu.

The paper size setting for the machine is other than A4, Letter, Legal or Folio when receiving fax.

Error code 8E02

Size mismatch
Reload correct paper, then press Start.

Detected that the size of the paper set to paper tray was over 10 mm shorter than letter size when receiving fax or printing a list/report.

<User Check>

- Set A4 or Letter size paper.

Step	Cause	Remedy
1	Registration rear actuator caught in some sections of the machine	Reattach the registration rear actuator.
2	Registration rear sensor failure	Replace the registration front/rear actuator holder ASSY.
3	Main PCB failure	Replace the main PCB ASSY.

■ Error code 9002

Size mismatch
Reload correct paper, then press Start.

When printing from the paper tray, the size of paper set in the paper tray does not match the size specified by the driver.

<User Check>

- Change the driver setting to be matched with the size of the paper set in the paper tray.

Step	Cause	Remedy
1	Registration rear actuator caught in some sections of the machine	Reattach the registration rear actuator.
2	Registration rear sensor failure	Replace the registration front/rear actuator holder ASSY.
3	Main PCB failure	Replace the main PCB ASSY.

■ Error code 9302

No Paper
Load paper.

When printing from the paper tray, the paper feed sensor detected that there was no paper set in the paper tray.

Error code 9307

No Paper
Load paper in Tray.

Detected that paper has run out during receiving fax or printing a list/report.

<User Check>

- Set paper in the paper tray.

Step	Cause	Remedy
1	Connection failure of the paper feed sensor harness	Reconnect the paper feed sensor harness ASSY.
2	Paper feed actuator caught in sections of the machine	Reattach the paper feed actuator.
3	New toner sensor PCB failure	Replace the new toner sensor PCB ASSY.
4	Main PCB failure	Replace the main PCB ASSY.

■ Error code 9701

Size Error DX
Press Stop Key. Specify the correct paper and load the same size paper as the Printer driver setting.

A tray set to duplex printing-incompatible size was specified in duplex printing.

<User Check>

- Specify A4 or Letter size paper in the driver and set paper with the same size to the specified paper tray.

Step	Cause	Remedy
1	Main PCB failure	Replace the main PCB ASSY.

■ Error code A000

Scan Unable
Remove the original document. Turn the power off, then on again.

Image processing cannot be completed correctly because the number of pixels required for image processing is insufficient in the scanned data for the second side of the document.

Step	Cause	Remedy
1	Incorrect correction data for second side CIS unit	Execute "Set CIS scan area (function code: 55)".
2	Second side CIS unit failure	Replace the second side CIS unit.
3	Main PCB failure	Replace the main PCB ASSY.

■ Error code A200

Document Jam
Clear the scanner jam, then press the Stop Key.

The first side document scanning position sensor detected that the document length was 90 cm or longer while scanning the document.

<User Check>

- Set A4 or Letter size paper.
- Remove the jammed document.

Step	Cause	Remedy
1	First side document scanning position actuator caught in some sections of the machine	Reattach the first side document scanning position actuator.
2	First side document scanning position sensor failure	Replace the first side document scanning position sensor PCB ASSY.
3	Main PCB failure	Replace the main PCB ASSY.

■ Error code A300

Document Jam
Clear the scanner jam, then press the Stop Key.

The first side document scanning position sensor has not detected the top of the document even after the document has been fed for the specified distance.

<User Check>

- Set A4 or Letter size paper.
- Remove the jammed document.

Step	Cause	Remedy
1	First side document scanning position actuator caught in some sections of the machine	Reattach the first side document scanning position actuator.
2	Connection failure of the first side document scanning position sensor PCB harness	Reconnect the first side document scanning position sensor PCB harness.
3	First side document scanning position sensor failure	Replace the first side document scanning position sensor PCB ASSY.
4	Main PCB failure	Replace the main PCB ASSY.

■ Error code A400

Cover is Open
Close the ADF Cover, then press the Stop Key.

The ADF cover sensor detected that the ADF cover was open.

<User Check>

- Close the ADF cover correctly.

Step	Cause	Remedy
1	ADF cover actuator caught in some sections of the machine	Reattach the ADF cover actuator.
2	Connection failure of the ADF cover/document detection sensor PCB harness	Reconnect the ADF cover/document detection sensor PCB harness.
3	ADF cover sensor failure	Replace the ADF cover/document detection sensor PCB ASSY.
4	Main PCB failure	Replace the main PCB ASSY.

■ Error code A500

-

When scanning the fax, white or black correction data for the first side CIS was not within the correct range. (First time)

Error code A600

-

When scanning the fax, white or black correction data for the first side CIS was not within the correct range. (Second time)

Step	Cause	Remedy
1	Incorrect correction data for first side CIS	Execute "Set CIS scan area (function code: 55)".
2	First side CIS unit failure	Replace the first side CIS unit.
3	Main PCB failure	Replace the main PCB ASSY.

■ Error code A700

Print Unable A7 **Turn the power off and then back on again.**

Color parameter in the ROM does not match the first or second side CIS.

<User Check>

- Install the latest firmware.

Step	Cause	Remedy
1	Second side CIS unit failure	Replace the second side CIS unit.
2	First side CIS unit failure	Replace the first side CIS unit.
3	Main PCB failure	Replace the main PCB ASSY.

■ Error code AC00

-

When scanning the fax, white or black correction data for the second side CIS was not within the correct range. (First time)

Step	Cause	Remedy
1	Incorrect correction data for second side CIS unit	Execute "Set CIS scan area (function code: 55)".
2	Second side CIS unit failure	Replace the second side CIS unit.
3	Main PCB failure	Replace the main PCB ASSY.

■ Error code AD00

Scan Unable
Remove the original document. Turn the power off, then on again.

Image processing cannot be completed correctly because the number of pixels required for image processing is insufficient in the scanned data for the first side of the document.

Step	Cause	Remedy
1	Incorrect correction data for first side CIS unit	Execute "Set CIS scan area (function code: 55)".
2	First side CIS unit failure	Replace the first side CIS unit.
3	Main PCB failure	Replace the main PCB ASSY.

■ Error code AF00

Scan Unable AF
Turn the power off and then back on again.

Home position is still being detected even after the first side CIS was moved.

Step	Cause	Remedy
1	Dust on the CIS rail	Remove the dust on the CIS rail.
2	CIS drive belt coming off	Reattach the CIS drive belt.
3	CIS carriage coming off	Reattach the CIS carriage.
4	Connection failure of the document scanner motor harness	Reconnect the document scanner motor harness.
5	First side CIS unit failure	Replace the first side CIS unit.
6	Document scanner motor failure	Replace the document scanner unit.
7	Main PCB failure	Replace the main PCB ASSY.

■ Error code B000

Scanner Error
-

Detected that the first or second side CIS flat cable was not inserted correctly when function code 55 was executed.

Step	Cause	Remedy
1	Connection failure of the first side CIS flat cable	Reconnect the first side CIS flat cable.
2	Connection failure of second side CIS flat cable	Reconnect the second side CIS flat cable.
3	First side CIS unit failure	Replace the first side CIS unit.
4	Second side CIS unit failure	Replace the second side CIS unit.
5	Main PCB failure	Replace the main PCB ASSY.

■ Error code BB00

Scanner Error
-

A white level not within the standard was scanned when function code 55 was executed.

Step	Cause	Remedy
1	Dirt on the second side document hold	Clean the second side document hold.
2	Dirt on the white tape	Clean the white tape.
3	First side CIS unit failure	Replace the first side CIS unit.
4	Second side CIS unit failure	Replace the second side CIS unit.
5	Second side document hold failure	Replace the ADF unit.
6	White tape failure	Replace the document scanner unit.
7	Main PCB failure	Replace the main PCB ASSY.

■ Error code BC00

-

When scanning the fax, white or black correction data for the second side CIS was not within the correct range. (Second time)

Step	Cause	Remedy
1	Incorrect correction data for second side CIS unit	Execute "Set CIS scan area (function code: 55)".
2	Second side CIS unit failure	Replace the second side CIS unit.
3	Main PCB failure	Replace the main PCB ASSY.

■ Error code BD00

Scanner Error
-

A black level not within the standard was scanned when function code 55 was executed.

Step	Cause	Remedy
1	Dirt on the second side document hold	Clean the second side document hold.
2	Dirt on the white tape	Clean the white tape.
3	First side CIS unit failure	Replace the first side CIS unit.
4	Second side CIS unit failure	Replace the second side CIS unit.
5	Second side document hold failure	Replace the ADF unit.
6	White tape failure	Replace the document scanner unit.
7	Main PCB failure	Replace the main PCB ASSY.

■ Error code BF00

Scan Unable
Document is too long for 2-sided scanning. Press Stop key.

The first side document scanning position sensor detected that the ADF was unable to duplex-feed the document because the document length is 400 mm or longer.

<User Check>

- Set A4 or Letter size paper.
- Remove the jammed document.

Step	Cause	Remedy
1	First side document scanning position actuator caught in some sections of the machine	Reattach the first side document scanning position actuator.
2	First side document scanning position sensor failure	Replace the first side document scanning position sensor PCB ASSY.
3	Main PCB failure	Replace the main PCB ASSY.

■ Error code C700

Out of Memory
Press Stop Key.

There is insufficient memory to expand PC print data.

Error code C800

Print Data Full
Print Data is full. Press Stop and delete the previously stored data.

The memory size allotted for Secure print was exceeded when saving Secure print data.

<User Check>

- Print the print data stored in the memory.
- Divide the print data and print them separately.

Step	Cause	Remedy
1	Main PCB failure	Replace the main PCB ASSY.

■ Error code D100

Print Unable D1
Turn the power off and then back on again.

An error occurred while initializing the modem.

Step	Cause	Remedy
1	Modem PCB failure	Replace the modem PCB ASSY.
2	Main PCB failure	Replace the main PCB ASSY.

■ Error code D200

Machine Error **Unplug machine, then call Brother.**

Detected the modem PCB was not connected.

Step	Cause	Remedy
1	Connection failure of the modem flat cable	Reconnect the modem flat cable.
2	Modem PCB failure	Replace the modem PCB ASSY.
3	Main PCB failure	Replace the main PCB ASSY.

■ Error code D800

Print Unable D8 **Turn the power off and then back on again.**

An error occurred while initializing the touch panel.

Error code D900

-

Communication between the panel PCB and main PCB was unable while initializing the touch panel.

<User Check>

- Check that there is no object on the touch panel.
- Install the latest firmwares (panel firmware and main firmware).

Step	Cause	Remedy
1	Connection failure of the touch panel flat cable	Reconnect the touch panel flat cable.
2	Touch panel failure	Replace the touch panel ASSY.
3	Main PCB failure	Replace the main PCB ASSY.

■ Error code DA00

-

There was no response from the panel PCB for the specified time after initializing the panel PCB.

<User Check>

- Install the latest firmwares (panel firmware and main firmware).

Step	Cause	Remedy
1	Touch panel failure	Replace the touch panel ASSY.
2	Main PCB failure	Replace the main PCB ASSY.

■ Error code E000

Print Unable E0
Turn the power off and then back on again.

An error occurred in the ROM check sum.

Error code E100

Print Unable E1
Turn the power off and then back on again.

Program error

<User Check>

- Install the latest firmware.

Step	Cause	Remedy
1	Main PCB failure	Replace the main PCB ASSY.

■ Error code E500

Print Unable E5
Turn the power off and then back on again.

An error occurred during access to the DRAM in the main PCB ASSY.

Error code E600

Print Unable E6
Turn the power off and then back on again.

Write error in the EEPROM of the main PCB ASSY

Error code E701

Print Unable E7
Turn the power off and then back on again.

Irregular operation of the flash ROM file system on the main PCB.

Error code E702

Print Unable E7
Turn the power off and then back on again.

Read error in the flash ROM on the main PCB

Step	Cause	Remedy
1	Main PCB failure	Replace the main PCB ASSY.

■ Error code F900

Machine Error F9
-

The country code was not entered correctly.

Step	Cause	Remedy
1	The power was turned OFF while function code 74 was running.	Reenter the country code.
2	Main PCB failure	Replace the main PCB ASSY.

4.2 Troubleshooting for Paper Feeding Problems

End users can solve problems related to paper feeding as long as they follow the User Check items. If the problem still cannot be solved, implement each procedure according to the step numbers in the tables below.

4.2.1 No paper is fed from paper tray

<User Check>

- Check that the paper is set in the paper tray correctly.
- Check that there is not too much paper set in the paper tray.
- Flip over the paper in the paper tray or rotate the paper 180°.
- Check that the thickness of the paper is 60 to 105 g/m^2.
- Check that the manual feed slot is not set as the pick-up tray.
- Flip through the paper and reset it in the paper tray.
- Clean the pick-up roller.

Step	Cause	Remedy
1	Accumulated paper dust	Remove the paper dust cleaning roller cover and get rid of the paper dust in the area described in the figure below.
2	Roller holder ASSY attachment failure	Reattach the roller holder ASSY correctly.
3	Connection failure of the main motor flat cable	Reconnect the main motor flat cable.
4	Connection failure of the paper feed sensor harness	Reconnect the paper feed sensor harness ASSY.
5	Paper feed actuator coming off	Reattach the paper feed actuator.
6	Connection failure of the new toner sensor PCB flat cable	Reconnect the new toner sensor PCB flat cable.
7	Connection failure of the T1 clutch harness	Reconnect the T1 clutch harness.
8	Abrasion of the pick-up roller	Replace the PF kit.
9	T1 clutch failure	Replace the T1 clutch.
10	Damaged P/P gear	Replace the paper tray.
11	Main motor failure	Replace the main motor.
12	Damaged gears in the paper feeding system	Replace the main frame L ASSY.
13	Damaged fuser unit	Replace the fuser unit.
14	Main PCB failure	Replace the main PCB ASSY.

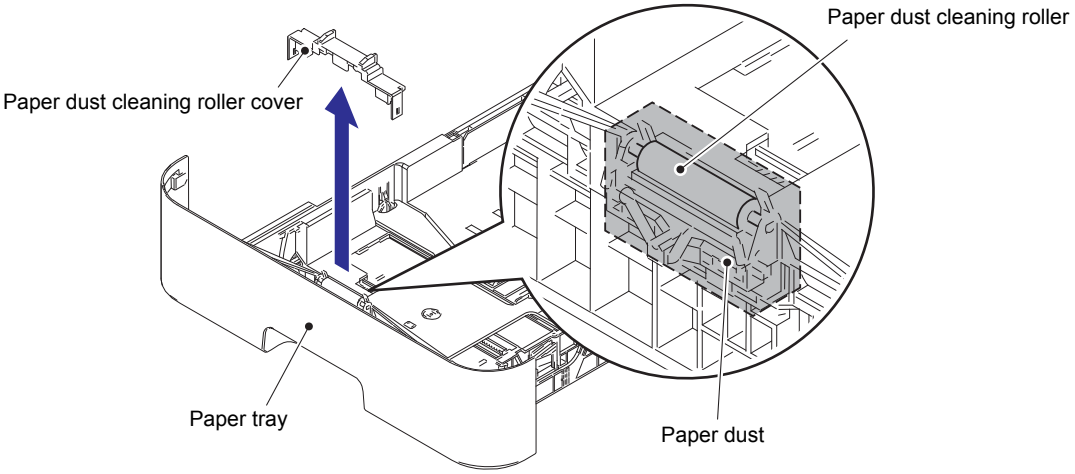

Fig. 2-10

4.2.2 No paper is fed from manual feed slot

<User Check>

- Check that the paper is set into the deepest part of the manual feed slot.
- Check that multiple sheets of paper are not set in the manual feed slot.
- Check that the thickness of the paper is 60 to 163 g/m^2.
- Check that the paper tray is not set as the pick-up tray.
- Check that the paper tray is closed correctly.

Step	Cause	Remedy
1	Connection failure of the main motor flat cable	Reconnect the main motor flat cable.
2	Connection failure of the registration clutch harness	Reconnect the registration clutch harness.
3	Registration front actuator coming off	Reattach the registration front actuator.
4	Connection failure of the registration front sensor PCB harness	Reconnect the registration front sensor PCB harness.
5	HVPS flat cable breakage	Replace the HVPS flat cable.
6	Registration clutch failure	Replace the registration clutch.
7	Registration front sensor failure	Replace the registration front/rear actuator holder ASSY.
8	Connection failure of the HVPS flat cable	Reconnect the HVPS flat cable.
9	Main motor failure	Replace the main motor.
10	Damaged fuser unit	Replace the fuser unit.
11	High-voltage power supply PCB failure	Replace the high-voltage power supply PCB ASSY.
12	Main PCB failure	Replace the main PCB ASSY.

4.2.3 Multiple sheets of paper are fed

<User Check>

- Check that there is not too much paper set in the paper tray.
- Check that the paper is set in the paper tray correctly.
- Flip over the paper in the paper tray or rotate the paper 180°.
- Check that the thickness of the paper is 60 to 105 g/m^2.
- Flip through the paper and reset it in the paper tray.

Step	Cause	Remedy
1	Abrasion of the separation pad	Replace the PF kit.

4.2.4 Paper becomes wrinkled

<User Check>

- Check that the paper is set in paper tray correctly.
- Flip over the paper in paper tray or rotate the paper 180°.
- Adjust each paper guide according to the paper size.
- Check that the thickness of the paper is 60 to 105 g/m^2.
  (60 to 163 g/m^2 for manual feed slot)
- Check that the paper is not damp.
- Check that there is no dust stuck to the fuser unit.
- Check that the type of paper is appropriate.

Step	Cause	Remedy
1	Fuser unit failure	Replace the fuser unit.
2	Damaged gears in the ejecting system	Replace the main frame L ASSY.

4.2.5 Paper is fed at an angle

<User Check>

- Check that the paper is set in paper tray correctly.
- Flip over the paper in paper tray or rotate the paper 180°.
- Adjust each paper guide according to the paper size.
- Check that the thickness of the paper is 60 to 105 g/m^2.
  (60 to 163 g/m^2 for manual feed slot)
- Check that there is not too much paper set in the paper tray.
- Check that the type of paper is appropriate.
- Clean the pick-up roller.
- Check that the green envelope lever is not lowered on only one side.
- Replace the drum unit.
- Replace the toner cartridge.

Step	Cause	Remedy
1	Pinch spring of the paper tray coming off	Reattach the pinch spring of the paper tray.
2	Tray pinch spring of the machine side coming off	Reattach the tray pinch spring of the machine side. Refer to the figure below.
3	One-side abrasion of the pick-up rollers	Replace the PF kit.
4	Main PCB failure	Replace the main PCB ASSY.
5	Damaged gears in the feeding system	Replace the main frame L ASSY.

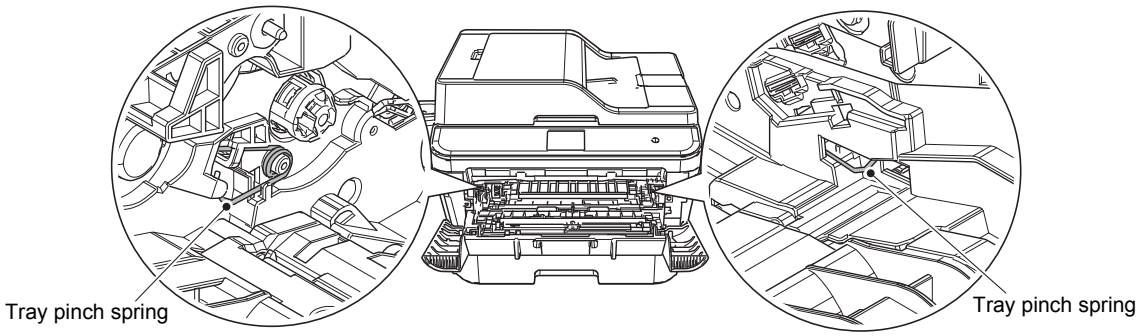

Fig. 2-11

4.2.6 Paper is curled

<User Check>

- Check that the paper specified in driver settings is matched to the paper set.
- Select "Reduce Paper Curl" in the driver.
- Check that the paper is set in paper tray correctly.
- Print while the green envelope levers are lowered.

Step	Cause	Remedy
1	Fuser unit failure	Replace the fuser unit.
2	Main PCB failure	Replace the main PCB ASSY.

4.2.7 Duplex printing is not possible

<User Check>

- Close the back cover correctly.
- Set the duplex tray correctly.
- Set the driver setting to duplex printing.
- Use A4 or Letter paper specified by the manufacturer.

Step	Cause	Remedy
1	Eject actuator coming off	Reattach the eject actuator.
2	Back cover failure	Replace the back cover.
3	Back cover/duplex tray sensor or eject sensor failure	Replace the eject sensor PCB ASSY.
4	Duplex tray failure	Replace the duplex tray.
5	Main PCB failure	Replace the main PCB ASSY.
6	Damaged gears in the ejecting system	Replace the main frame L ASSY.

4.2.8 Paper jam

■ Paper jams in the paper tray

<User Check>

- Check that the paper is set in the paper tray correctly.
- Flip over the paper in the paper tray or rotate the paper 180°.
- Adjust the paper guide according to the paper size.
- Check that there is not too much paper set in the paper tray.
- Check that the thickness of the paper is 60 to 105 g/m^2.
- Flip through the paper and reset it in the paper tray.
- Replace the toner cartridge with a new one.
- Replace the drum unit with a new one.

Step	Cause	Remedy
1	Foreign object around the paper tray	Remove the foreign object.
2	Paper dust cleaning roller attachment failure	Reattach the paper dust cleaning roller.
3	Registration front actuator coming off	Reattach the registration front actuator.
4	Connection failure of the registration front/rear sensor PCB harness	Reconnect the registration front/rear sensor PCB harness.
5	Connection failure of the registration clutch harness	Reconnect the registration clutch harness.
6	Connection failure of the HVPS flat cable	Reconnect the HVPS flat cable.
7	HVPS flat cable breakage	Replace the HVPS flat cable.
8	Registration front sensor failure	Replace the registration front/rear actuator holder ASSY.
9	Registration clutch failure	Replace the registration clutch.
10	Main motor failure	Replace the main motor.
11	High-voltage power supply PCB failure	Replace the high-voltage power supply PCB ASSY.
12	Damaged gears in the paper feeding system	Replace the main frame L ASSY.
13	Damaged fuser unit	Replace the fuser unit.
14	Main PCB failure	Replace the main PCB ASSY.

■ Paper jams in the manual feed slot

<User Check>

- Check that the paper is set in the manual feed slot correctly.
- Flip over the paper in the manual feed slot or rotate the paper 180°.
- Adjust the paper guide according to the paper size.
- Check that multiple sheets of paper are not set.
- Check that the thickness of the paper is 60 to 163 g/m^2.

Step	Cause	Remedy
1	Foreign object around the manual feed slot	Remove the foreign object.
2	Connection failure of the registration front/rear sensor PCB harness	Reconnect the registration front/rear sensor PCB harness.
3	Registration front actuator coming off	Reattach the registration front actuator.
4	Connection failure of the registration clutch harness	Reconnect the registration clutch harness.
5	Connection failure of the HVPS flat cable	Reconnect the HVPS flat cable.
6	HVPS flat cable breakage	Replace the HVPS flat cable.
7	Registration front sensor failure	Replace the registration front/rear actuator holder ASSY.
8	Registration clutch failure	Replace the registration clutch.
9	Main motor failure	Replace the main motor.
10	High-voltage power supply PCB failure	Replace the high-voltage power supply PCB ASSY.
11	Damaged gears in the feeding system	Replace the main frame L ASSY.
12	Fuser unit failure	Replace the fuser unit.
13	Main PCB failure	Replace the main PCB ASSY.

■ Paper jams in the feeding path in the center of the machine

<User Check>

- Check that the paper is set in paper tray correctly.
- Flip over the paper in paper tray or rotate the paper 180°.
- Adjust each paper guide according to the paper size.
- Check that there is not too much paper set in the paper tray.
- Check that the thickness of the paper is 60 to 105 g/m^2.
  (60 to 163 g/m^2 for manual feed slot)
- Flip through the paper and reset it in the paper tray.
- Replace the drum unit.

Step	Cause	Remedy
1	Foreign object inside the machine	Remove the foreign object.
2	Eject actuator coming off	Reattach the eject actuator.
3	Connection failure of the eject sensor PCB flat cable	Reconnect the eject sensor PCB flat cable.
4	Connection failure of the registration clutch harness	Reconnect the registration clutch harness.
5	Fuser cover attachment failure	Reattach the fuser cover.
6	Registration clutch failure	Replace the registration clutch.
7	Eject sensor failure	Replace the eject sensor PCB ASSY.
8	Registration rear sensor failure	Replace the registration front/rear actuator holder ASSY.
9	Main motor failure	Replace the main motor.
10	High-voltage power supply PCB failure	Replace the high-voltage power supply PCB ASSY.
11	Damaged gears in the feeding system	Replace the main frame L ASSY.
12	Fuser unit failure	Replace the fuser unit.
13	Main PCB failure	Replace the main PCB ASSY.

■ Paper jams in the ejecting section

<User Check>

- Check that the paper is set in paper tray correctly.
- Flip over the paper in paper tray or rotate the paper 180°.
- Adjust each paper guide according to the paper size.
- Check that there is not too much paper set in the paper tray.
- Check that the thickness of the paper is 60 to 105 g/m^2.
  (60 to 163 g/m^2 for manual feed slot)
- Flip through the paper and reset it in the paper tray.

Step	Cause	Remedy
1	Foreign object in the back cover	Remove the foreign object.
2	Eject actuator coming off	Reattach the eject actuator.
3	Connection failure of the eject sensor PCB flat cable	Reconnect the eject sensor PCB flat cable.
4	Fuser cover attachment failure	Reattach the fuser cover.
5	Eject sensor failure	Replace the eject sensor PCB ASSY.
6	Damaged gears in the ejecting system	Replace the main frame L ASSY.
7	Fuser unit failure	Replace the fuser unit.
8	Main PCB failure	Replace the main PCB ASSY.

■ Paper jams in the duplex tray

<User Check>

- Flip over the paper in paper tray or rotate the paper 180°.
- Check that the thickness of the paper is 60 to 105 g/m^2.
  (60 to 163 g/m^2 for manual feed slot)
- Flip through the paper and reset it in the paper tray.

Step	Cause	Remedy
1	Foreign object in the duplex paper feed system	Remove the foreign object.
2	Eject actuator coming off	Reattach the eject actuator.
3	Fuser cover attachment failure	Reattach the fuser cover.
4	Back cover failure	Replace the back cover.
5	Eject sensor PCB failure	Replace the eject sensor PCB ASSY.
6	Duplex tray failure	Replace the duplex tray.
7	Main PCB failure	Replace the main PCB ASSY.

4.3 Troubleshooting for Image Defects

4.3.1 Image defect examples

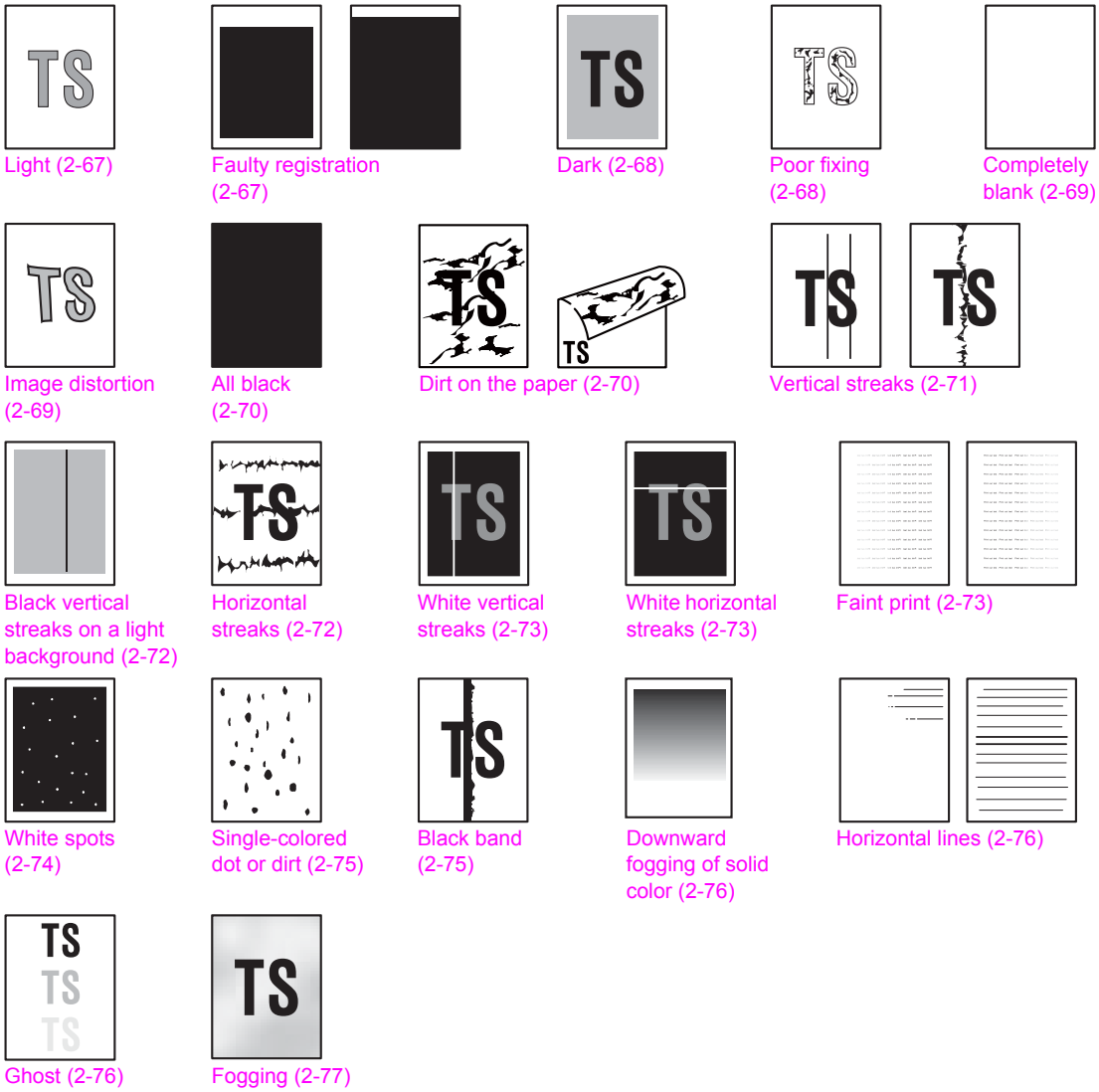

Fig. 2-12

4.3.2 Troubleshooting according to image defect

End users can solve problems related to image defect as long as they follow the User Check items. If the problem still cannot be solved, implement each procedure according to the step numbers in the tables below.

■ Light

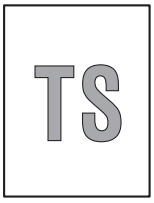

<User Check>

- Check the usage environment of the machine. Using the machine in hot-humid or cold-dry conditions can cause this problem.
- If the whole page is light, toner save mode may be ON. Turn OFF the toner save mode.
- Replace the drum unit with a new one.
- Replace the toner cartridge with a new one.
- Turn ON the power switch, and leave the machine for a while (condensation).
- Check that the paper is not damp.

Step	Cause	Remedy
1	Dirt on the electrodes of the drum unit and those of the machine	Clean the electrodes of the drum unit and those of the machine. (Refer to Fig. 2-8 and Fig. 2-9.)
2	Dirt on the electrodes of the toner cartridge and those of the machine	Clean the electrodes of the toner cartridge and those of the machine. (Refer to Fig. 2-8 and Fig. 2-9.)
3	Wrong adjusted value of the laser unit entered	Refer to "1.4 Setting Serial Number and Entering Adjusted Value of Laser Unit" in Chapter 4, and enter the adjusted value of the laser unit correctly.
4	Dirt on the electrodes of the high-voltage power supply PCB	Clean the electrodes of the machine. (Refer to Fig. 2-9.)
5	Fuser unit failure	Replace the fuser unit.
6	High-voltage power supply PCB failure	Replace the high-voltage power supply PCB ASSY.
7	Main PCB failure	Replace the main PCB ASSY.

■ Faulty registration

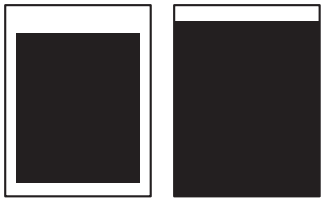

<User Check>

- Check that the appropriate paper type is selected in the driver.

Step	Cause	Remedy
1	Registration rear actuator coming off	Reattach the registration rear actuator.
2	Laser unit failure	Replace the laser unit.
3	Main PCB failure	Replace the main PCB ASSY.

■ Dark

<User Check>

- Check the usage environment of the machine. Using the machine in hot-humid or cold-dry conditions can cause this problem.
- If a new toner cartridge has been detected, check that it was not replaced with another toner cartridge.
- Clean the corona wire of the drum unit.
- Replace the drum unit with a new one.
- Replace the toner cartridge with a new one.

Step	Cause	Remedy
1	Dirt on the electrodes of the drum unit and those of the machine	Clean the electrodes of the drum unit and those of the machine. (Refer to Fig. 2-8 and Fig. 2-9.)
2	Dirt on the electrodes of the toner cartridge and those of the machine	Clean the electrodes of the toner cartridge and those of the machine. (Refer to Fig. 2-8 and Fig. 2-9.)
3	Wrong adjusted value of the laser unit entered	Refer to "1.4 Setting Serial Number and Entering Adjusted Value of Laser Unit" in Chapter 4, and enter the adjusted value of the laser unit correctly.
4	Dirt on the electrodes of the high-voltage power supply PCB	Clean the electrodes of the machine. (Refer to Fig. 2-9.)
5	Fuser unit failure	Replace the fuser unit.
6	High-voltage power supply PCB failure	Replace the high-voltage power supply PCB ASSY.
7	Main PCB failure	Replace the main PCB ASSY.
8	Laser unit failure	Replace the laser unit.

■ Poor fixing

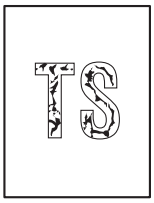

<User Check>

- Check the usage environment of the machine. Using the machine in hot-humid or cold-dry conditions can cause this problem.
- Clean the corona wire of the drum unit.
- Replace the drum unit with a new one.
- Replace the toner cartridge with a new one.

Step	Cause	Remedy
1	Dirt on the electrodes of the toner cartridge and those of the machine	Clean the electrodes of the toner cartridge and those of the machine. (Refer to Fig. 2-8 and Fig. 2-9.)
2	Fuser unit failure	Replace the fuser unit.
3	High-voltage power supply PCB failure	Replace the high-voltage power supply PCB ASSY.
4	Low-voltage power supply PCB failure	Replace the low-voltage power supply PCB ASSY.
5	Laser unit failure	Replace the laser unit.
6	Main PCB failure	Replace the main PCB ASSY.

■ Completely blank

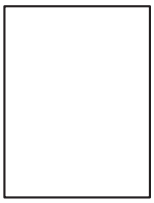

<User Check>

- Clean the corona wire of the drum unit.
- Replace the drum unit with a new one.
- Replace the toner cartridge with a new one.
- Install the latest firmware.

Step	Cause	Remedy
1	Dirt on the electrodes of the drum unit and those of the machine	Clean the electrodes of the drum unit and those of the machine. (Refer to Fig. 2-8 and Fig. 2-9.)
2	Dirt on the electrodes of the toner cartridge and those of the machine	Clean the electrodes of the toner cartridge and those of the machine. (Refer to Fig. 2-8 and Fig. 2-9.)
3	Connection failure of the laser unit flat cable	Reconnect the laser unit flat cable.
4	Laser unit attachment failure	Reattach the laser unit.
5	Laser unit flat cable failure	Replace the laser unit flat cable.
6	Dirt on the electrodes of the high-voltage power supply PCB	Clean the electrodes of the machine. (Refer to Fig. 2-9.)
7	Laser unit failure	Replace the laser unit.
8	Main PCB failure	Replace the main PCB ASSY.

■ Image distortion

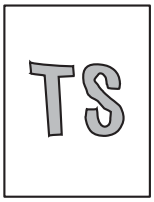

Step	Cause	Remedy
1	Laser unit attachment failure	Reattach the laser unit.
2	Laser unit failure	Replace the laser unit.
3	Main PCB failure	Replace the main PCB ASSY.

■ All black

<User Check>

- Clean the corona wire of the drum unit.
- Replace the drum unit with a new one.

Step	Cause	Remedy
1	Dirt on the electrodes of the drum unit and those of the machine	Clean the electrodes of the drum unit and those of the machine. (Refer to Fig. 2-8 and Fig. 2-9.)
2	Dirt on the electrodes of the toner cartridge and those of the machine	Clean the electrodes of the toner cartridge and those of the machine. (Refer to Fig. 2-8 and Fig. 2-9.)
3	Laser unit flat cable failure	Replace the laser unit flat cable.
4	Dirt on the electrodes of the high-voltage power supply PCB	Clean the electrodes of the machine. (Refer to Fig. 2-9.)
5	High-voltage power supply PCB failure	Replace the high-voltage power supply PCB ASSY.
6	Laser unit failure	Replace the laser unit.
7	Main PCB failure	Replace the main PCB ASSY.

■ Dirt on the paper

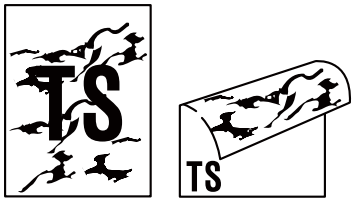

<User Check>

- This problem may disappear after printing multiple sheets of paper.
- Replace the drum unit with a new one.

Step	Cause	Remedy
1	Dirt on the paper feed system	Wipe off the dirt.
2	Dirt on the fuser unit	Replace the fuser unit.
3	High-voltage power supply PCB failure	Replace the high-voltage power supply PCB ASSY.

■ Vertical streaks

<User Check>

- Clean the corona wire of the drum unit.
- Return the corona wire cleaning tab to the "▲" position.
- This problem may disappear after printing multiple sheets of paper.
- Refer to the User's Guide to remove the dirt from the exposure drum using a cotton applicator.
- Replace the drum unit with a new one.
- Replace the toner cartridge with a new one.

Step	Cause	Remedy
1	Dirt on the paper feed system	Wipe off the dirt.
2	FG harnesses or FG plate attachment failure (not grounded correctly)	Retighten the screws to secure the FG harnesses or FG plate. Fix the bent tray ground spring of the paper tray (Refer to the figure below).
3	Dirt on the fuser unit	Replace the fuser unit.
4	Laser unit failure	Replace the laser unit.

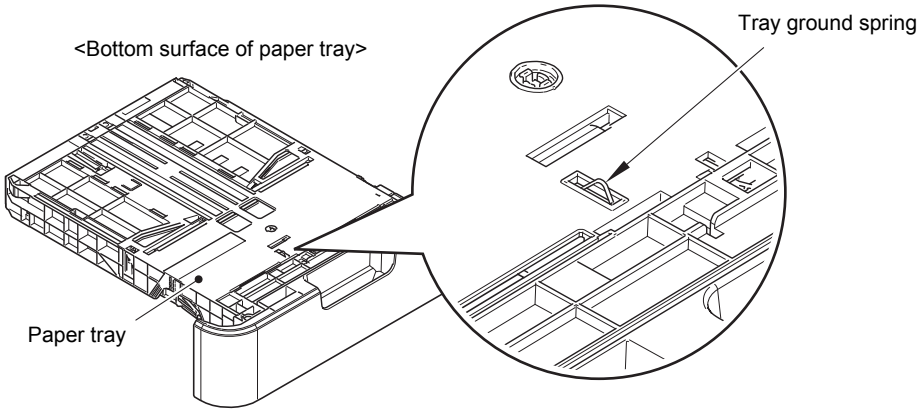

Fig. 2-13

■ Black vertical streaks on a light background

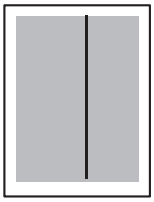

<User Check>

- Clean the corona wire of the drum unit.
- This problem may disappear after printing multiple sheets of paper.
- Refer to the User's Guide to remove the dirt from the exposure drum using a cotton applicator.
- Turn ON the power switch, and leave the machine for a while (condensation).
- Replace the drum unit with a new one.
- Replace the toner cartridge with a new one.

Step	Cause	Remedy
1	Dirt on the charge electrodes	Clean the electrodes of the drum unit and those of the machine. (Refer to Fig. 2-8 and Fig. 2-9.)
2	Laser unit failure	Replace the laser unit.

■ Horizontal streaks

<User Check>

- Clean the corona wire of the drum unit.
- This problem may disappear after printing multiple sheets of paper.
- Refer to the User's Guide to remove the dirt from the exposure drum using a cotton applicator.
- Replace the drum unit with a new one.
- Replace the toner cartridge with a new one.

Step	Cause	Remedy
1	Dirt on the charge electrodes	Clean the electrodes of the drum unit and those of the machine. (Refer to Fig. 2-8 and Fig. 2-9.)
2	FG harnesses or FG plate attachment failure (not grounded correctly)	Retighten the screws to secure the FG harnesses or FG plate. Fix the bent tray ground spring of the paper tray. (Refer to Fig. 2-13.)
3	Scratch or dirt on the fuser unit	Replace the fuser unit.
4	High-voltage power supply PCB failure	Replace the high-voltage power supply PCB ASSY.

■ White vertical streaks

<User Check>

- Clean the corona wire of the drum unit.
- Check that there is no dust on the toner cartridge.
- Refer to the User's Guide to remove the dirt from the exposure drum using a cotton applicator.
- Replace the drum unit with a new one.
- Replace the toner cartridge with a new one.

Step	Cause	Remedy
1	Dirt on the charge electrodes	Clean the electrodes of the drum unit and those of the machine. (Refer to Fig. 2-8 and Fig. 2-9.)
2	Laser unit failure	Replace the laser unit.

■ White horizontal streaks

<User Check>

- This problem may disappear after printing multiple sheets of paper.
- Replace the drum unit with a new one.
- Replace the toner cartridge with a new one.

Step	Cause	Remedy
1	Dirt on the charge electrodes	Clean the electrodes of the drum unit and those of the machine. (Refer to Fig. 2-8 and Fig. 2-9.)
2	Scratch or dirt on the fuser unit	Replace the fuser unit.
3	High-voltage power supply PCB failure	Replace the high-voltage power supply PCB ASSY.

■ Faint print

<User Check>

- Check that the machine is positioned on a level surface.
- Replace the drum unit with a new one.
- Replace the toner cartridge with a new one.

Step	Cause	Remedy
1	Laser unit failure	Replace the laser unit.
2	Fuser unit failure	Replace the fuser unit.
3	Main PCB failure	Replace the main PCB ASSY.

■ White spots

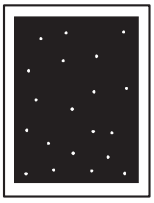

<User Check>

- Check that the fan is not clogged.
- Refer to the User's Guide to remove the dirt from the exposure drum using a cotton applicator.
- Replace the drum unit with a new one.
- Replace the toner cartridge with a new one.

Step	Cause	Remedy
1	Accumulated paper dust	Remove the paper dust cleaning roller cover and get rid of the paper dust in the area described in Fig. 2-10.
2	Clogged filter	Clean the filter.
3	Scratch or dirt on the fuser unit	Replace the fuser unit.
4	High-voltage power supply PCB failure	Replace the high-voltage power supply PCB ASSY.

■ Single-colored dot or dirt

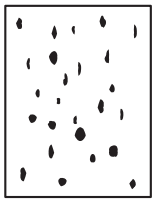

<User Check>

- Check that the paper is not damp.
- Refer to the User's Guide to remove the dirt from the exposure drum using a cotton applicator.
- Replace the drum unit with a new one.
- Replace the toner cartridge with a new one.

Step	Cause	Remedy
1	Accumulated paper dust	Remove the paper dust cleaning roller cover and get rid of the paper dust in the area described in Fig. 2-10.
2	Clogged filter	Clean the filter.
3	Scratch or dirt on the fuser unit	Replace the fuser unit.
4	High-voltage power supply PCB failure	Replace the high-voltage power supply PCB ASSY.

Note:

- Image defects which appear periodically may be caused by failure of rollers. Refer to the table below and determine the cause based on the diameter of the rollers or the pitch at which defects appear on the image.

<Pitch appears in the image based on the rollers>

Part name	Pitch at which defects appear in the image
Develop roller	32.4 mm
Exposure drum	94.2 mm
Heat roller in the fuser unit	78.5 mm
Pressure roller in the fuser unit	78.5 mm

■ Black band

<User Check>

- Clean the corona wire of the drum unit.
- Return the corona wire cleaning tab to the "▲" position.
- This problem may disappear after printing multiple sheets of paper.
- Refer to the User's Guide to remove the dirt from the exposure drum using a cotton applicator.
- Replace the drum unit with a new one.
- Replace the toner cartridge with a new one.

Step	Cause	Remedy
1	FG harnesses or FG plate attachment failure (not grounded correctly)	Retighten the screws to secure the FG harnesses or FG plate. Fix the bent tray ground spring of the paper tray. (Refer to Fig. 2-13.)
2	Laser unit failure	Replace the laser unit.

■ Downward fogging of solid color

<User Check>

- Replace the toner cartridge with a new one.

Step	Cause	Remedy
1	High-voltage power supply PCB failure	Replace the high-voltage power supply PCB ASSY.
2	Main PCB failure	Replace the main PCB ASSY.

■ Horizontal lines

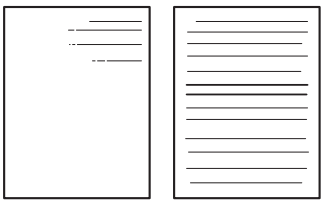

<User Check>

- This problem may disappear after printing multiple sheets of paper.
- Refer to the User's Guide to remove the dirt from the exposure drum using a cotton applicator.
- Replace the drum unit with a new one.
- Replace the toner cartridge with a new one.

Step	Cause	Remedy
1	Dirt on the charge electrodes	Clean the electrodes of the drum unit and those of the machine. (Refer to Fig. 2-8 and Fig. 2-9.)
2	Scratch or dirt on the fuser unit	Replace the fuser unit.
3	High-voltage power supply PCB failure	Replace the high-voltage power supply PCB ASSY.

■ Ghost

<User Check>

- Check the usage environment of the machine. Using the machine in hot-humid or cold-dry conditions can cause this problem.
- Check that the appropriate paper type is selected in the driver.
- Select "Improve Toner Fixing" in the driver.
- Replace the drum unit with a new one.

Step	Cause	Remedy
1	Scratch or dirt on the fuser unit	Replace the fuser unit.
2	High-voltage power supply PCB failure	Replace the high-voltage power supply PCB ASSY.

■ Fogging

<User Check>

- Check the usage environment of the machine. Using the machine in hot-humid or cold-dry conditions can cause this problem.
- Check that the acid paper is not used.
- This problem may disappear after printing multiple sheets of paper.
- Replace the toner cartridge with a new one.
- Replace the drum unit with a new one.

Step	Cause	Remedy
1	New toner sensor PCB failure	Replace the new toner sensor PCB ASSY.
2	High-voltage power supply PCB failure	Replace the high-voltage power supply PCB ASSY.
3	Main PCB failure	Replace the main PCB ASSY.

Note:

- This problem tends to occur when the life of the drum unit or toner cartridge is expiring.

4.4 Troubleshooting for Software Problems

End users can solve problems related to software, for instance, printing is not possible from a computer although test print or Printer Setting print can be performed from the machine, as long as they follow the User Check items. If the problem still cannot be solved, implement each procedure according to the step numbers in the tables below.

4.4.1 Cannot receive data

<User Check>

- Check that the USB cable or LAN cable is not damaged.
- When using an interface switch, check that the correct machine is selected.
- Check the relevant section in the User's Guide.
- Check the driver settings.
- Reset the machine to the default settings. (Refer to the User's Guide.)

Step	Cause	Remedy
1	Machine connection	For Macintosh, check the Product ID*. When it is wrong, update the firmware.
2	Main PCB failure	Replace the main PCB ASSY.

* Check the Product ID on a Macintosh according to the following procedure:

(1) Select "About This Mac" from the "Apple" menu.

(2) Press the "More Info..." button in the "About This Mac" dialog box.

(3) Select "USB" at the bottom of "Hardware" in the "Content" on the left side of the screen.

(4) Select "DCP-XXXX", "HL-XXXX" or "MFC-XXXX" in the "USB Device Tree".

(5) Check the "Product ID" under "DCP-XXXX", "HL-XXXX" or "MFC-XXXX".

Product ID (hexadecimal)

DCP-L2500D : 0321h
DCP-L2520D : 0324h
DCP-L2520DW : 0322h
DCP-L2540DN : 0326h
DCP-L2540DW : 0328h
DCP-L2560DW : 0329h
HL-L2380DW : 0330h
MFC-L2680W : 03BBh
MFC-L2685DW : 03FAh
MFC-L2700D : 0373h
MFC-L2700DN : 03BCh
MFC-L2700DW : 0331h
MFC-L2707DW : 03E1
MFC-L2720DW : 0337h
MFC-L2740DW : 0320h
DCP-7080 : 0368h
DCP-7080D : 0367h
DCP-7180DN : 0369h
MFC-7380 : 036Bh
MFC-7480D : 036Ch
MFC-7880DN : 036Dh

4.5 Troubleshooting for Network Problems

4.5.1 Cannot print via network connection

<User Check>

- Check the relevant section in the Network Setting Guide.
- Check the network connection.
- Reset the network. (Refer to the User's Guide.)
- Check the LAN cable.

Step	Cause	Remedy
1	Connection failure of the wireless LAN PCB	Reconnect the wireless LAN PCB.
2	Wireless LAN PCB failure	Replace the wireless LAN PCB.
3	Deformed LAN terminal pin Main PCB failure	Replace the main PCB ASSY.

4.5.2 Cannot connect to access point

<User Check>

- Check the wireless LAN settings.
- Check the access point settings.
- Change the machine installation location.
- Set the access point manually.

Step	Cause	Remedy
1	Invalid wireless LAN setting	Enable the WSW54 selector 4 setting.

4.6 Troubleshooting for Control Panel Problems

4.6.1 Nothing is displayed on the LCD

<User Check>

- Turn the power switch OFF and then ON again.

Step	Cause	Remedy
1	Rubber key attachment failure (For models without touch panel)	Reattach the rubber key.
2	Connection failure of the panel harness	Reconnect the panel harness.
3	Connection failure of the key PCB flat cable (For models with touch panel)	Reconnect the key PCB flat cable.
4	Connection failure of the LCD flat cable	Reconnect the LCD flat cable.
5	Connection failure of the LVPS harness	Reconnect the LVPS harness.
6	Power cord failure	Replace the power cord.
7	Rubber key failure (For models without touch panel)	Replace the panel unit.
8	Panel PCB failure	Replace the panel PCB ASSY.
9	Key PCB failure (For models with touch panel)	Replace the panel unit.
10	LCD failure (For models without touch panel)	Replace the LCD.
11	Low-voltage power supply PCB failure	Replace the low-voltage power supply PCB ASSY.
12	Main PCB failure	Replace the main PCB ASSY.

4.6.2 Nothing is displayed on the LED

<User Check>

- Turn the power switch OFF and then ON again.

Step	Cause	Remedy
1	Connection failure of the panel harness	Reconnect the panel harness.
2	Panel PCB failure	Replace the panel PCB ASSY.
3	Main PCB failure	Replace the main PCB ASSY.

Confidential

4.6.3 Control panel is inoperable

<User Check>

- Turn the power switch OFF and then ON again.

Step	Cause	Remedy
1	Rubber key attachment failure (For models without touch panel)	Reattach the rubber key.
2	Connection failure of the panel harness	Reconnect the panel harness.
3	Connection failure of the key PCB flat cable (For models with touch panel)	Reconnect the key PCB flat cable.
4	Connection failure of the LVPS harness	Reconnect the LVPS harness.
5	Rubber key failure (For models without touch panel)	Replace the panel unit.
6	Panel PCB failure	Replace the panel PCB ASSY.
7	Key PCB failure (For models with touch panel)	Replace the panel unit.
8	Low-voltage power supply PCB failure	Replace the low-voltage power supply PCB ASSY.
9	Main PCB failure	Replace the main PCB ASSY.

4.6.4 Machine is not in standard mode when it is turned ON

Change the default function selection mode setting to [DISABLE] by following the procedures below.

(1) Disconnect the power cord and then connect it again.

(2) Press and hold the [Home] key for approximately five seconds while the machine is in the ready state. The screen below appears on the LCD.

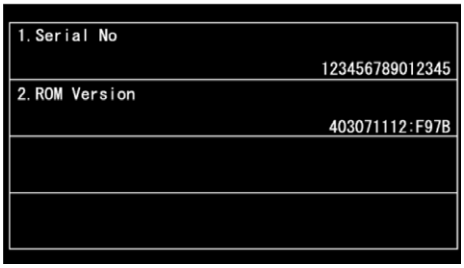

(3) Press and hold the blank field at the bottom for approximately two seconds. The screen below appears on the LCD.

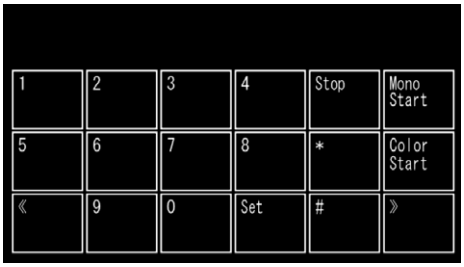

(4) Press the [*], [1], [9], [3], and [7] keys on the LCD in this order.

(5) Press the [0], [0], [8], and [4] keys on the LCD in this order.

(6) Press the [▲] or [▼] key to display “FUNC_DISABLE” on the LCD.

(7) Press the [Set] key. Default function selection is disabled.

(8) Press the 9 key twice and return to the ready state.

4.7 Troubleshooting for Toner and Drum Problems

4.7.1 New toner is not detected

<User Check>

- Check that the packaged toner cartridge is not set.
- Check that a new (not used) toner cartridge is set.
- Check that the genuine toner cartridge is set.

Step	Cause	Remedy
1	New toner actuator coming off	Reattach the new toner actuator.
2	Connection failure of the new toner sensor PCB flat cable	Reconnect the new toner sensor PCB flat cable.
3	New toner sensor PCB failure	Replace the new toner sensor PCB ASSY.
4	Main PCB failure	Replace the main PCB ASSY.

4.7.2 Toner cartridge cannot be recognized

<User Check>

- Set the toner cartridge correctly.

Step	Cause	Remedy
1	New toner actuator coming off	Reattach the new toner actuator.
2	Connection failure of the new toner sensor PCB flat cable	Reconnect the new toner sensor PCB flat cable.
3	New toner sensor PCB failure	Replace the new toner sensor PCB ASSY.
4	Main PCB failure	Replace the main PCB ASSY.

4.7.3 Error message prompting toner cartridge replacement does not disappear

<User Check>

- Check that a new (not used) toner cartridge is set.
- Check that the genuine toner cartridge is set.

Step	Cause	Remedy
1	New toner actuator coming off	Reattach the new toner actuator.
2	Connection failure of the new toner sensor PCB flat cable	Reconnect the new toner sensor PCB flat cable.
3	New toner sensor PCB failure	Replace the new toner sensor PCB ASSY.
4	Main PCB failure	Replace the main PCB ASSY.

4.7.4 Drum error

<User Check>

- Clean the corona wire of the drum unit.
- Replace the drum unit with a new one.

Step	Cause	Remedy
1	Dirt on the electrodes of the drum unit and those of the machine	Clean the electrodes of the drum unit and those of the machine. (Refer to Fig. 2-8 and Fig. 2-9.)
2	Dirt on the high-voltage power supply PCB terminal	Clean the electrodes of the machine. (Refer to Fig. 2-9.)
3	High-voltage power supply PCB failure	Replace the high-voltage power supply PCB ASSY.
4	Main PCB failure	Replace the main PCB ASSY.

4.7.5 Error message prompting drum replacement does not disappear

<User Check>

- Reset the drum counter according to the manual.

Step	Cause	Remedy
1	Main PCB failure	Replace the main PCB ASSY.

4.8 Troubleshooting for Fuser Unit Problems

4.8.1 Fuser unit failure

Step	Cause	Remedy
1	Connection failure of the center thermistor harness	Reconnect the center thermistor harness.
2	Connection failure of the side thermistor harness	Reconnect the side thermistor harness.
3	Connection failure of the heater harness	Reconnect the heater harness.
4	Connection failure of the eject sensor PCB flat cable	Reconnect the eject sensor PCB flat cable.
5	Eject sensor PCB failure	Replace the eject sensor PCB ASSY.
6	Low-voltage power supply PCB failure	Replace the low-voltage power supply PCB ASSY.
7	Fuser unit failure	Replace the fuser unit.
8	Main PCB failure	Replace the main PCB ASSY.

Note:

- Turn the power switch OFF and then ON again. Leave the machine for 15 minutes. This problem may then be cleared.
- The machine may recover from the error, when the test printing of the maintenance mode for service personnel is started. However, conducting this operation while the heater has not yet cooled may cause the fuser unit to melt. Be careful.

4.9 Troubleshooting for Laser Unit Problems

4.9.1 Laser unit failure

<User Check>

- Turn ON the power switch, then open the front cover and the back cover. Leave the machine for a while to remove condensation.

Step	Cause	Remedy
1	Wrong adjusted value of laser unit entered	Refer to "1.4 Setting Serial Number and Entering Adjusted Value of Laser Unit" in Chapter 4, and enter the adjusted value of the laser unit correctly.
2	Ground plate contact failure	Retighten the screws to secure the laser unit ground plate.
3	Laser unit attachment failure	Reattach the laser unit.
4	Connection failure of the laser unit flat cable	Reconnect the laser unit flat cable.
5	Laser unit failure	Replace the laser unit.
6	Main PCB failure	Replace the main PCB ASSY.

4.10 Troubleshooting for PCB Problems

4.10.1 Main PCB failure

<User Check>

- Turn the power switch OFF and then ON again.
- Install the latest firmware.
- Check that the PC Print is not forbidden.
- Check the print limit ID.
- Check that the print data is not damaged.

Step	Cause	Remedy
1	Main PCB failure	Replace the main PCB ASSY.

4.10.2 Memory full

<User Check>

- Print the accumulated data.
- Reduce the amount or resolution of the data.

Step	Cause	Remedy
1	Main PCB failure	Replace the main PCB ASSY.

4.10.3 Print limit / ID authentification error

<User Check>

- Check that the PC Print is not forbidden.
- Check the print limit ID.

Step	Cause	Remedy
1	Forgot ID	Execute "Initialize EEPROM parameters (function code: 01)" to reset ID and let user to input a new ID.
2	Main PCB failure	Replace the main PCB ASSY.

4.11 Troubleshooting for Document Feeding Problems

4.11.1 No document is fed

<User Check>

- Set the document properly and check that the display on the LCD changes.
- Check that the number of documents set is no more than 35 sheets.
- Check that the ADF cover is closed correctly.

Step	Cause	Remedy
1	Document detection actuator coming off	Reattach the document detection actuator.
2	ADF cover actuator coming off	Reattach the ADF cover actuator.
3	Connection failure of ADF motor harness	Check the connection of the ADF motor harness, and reconnect it if necessary.
4	Connection failure of ADF cover/ document detection sensor PCB harness	Check the connection of the ADF cover/ document detection sensor PCB harness, and reconnect it if necessary.
5	Boss to push the ADF cover sensor of the ADF cover	Replace the ADF cover ASSY.
6	Document separate roller failure	Replace the document separate roller.
7	ADF cover/document detection sensor failure	Replace the ADF cover/document detection sensor PCB ASSY.
8	ADF motor failure	Replace the ADF motor.
9	Damaged ADF drive gear	Replace the ADF unit.
10	Main PCB failure	Replace the main PCB ASSY.

4.11.2 Multiple documents are fed

<User Check>

- Check that paper used for the document is not thinner than 64 g/m^2.

Step	Cause	Remedy
1	Abrasion of ADF separation pad	Replace the ADF separation pad holder ASSY.

4.11.3 Document jam

■ Paper jam in the ADF cover

<User Check>

- Check that the paper used for the document is not thinner than 64 g/m^2.
- Check that the paper used for the document is not shorter than 147.3 mm.
- Check that the number of paper set has not exceeded the upper limit in the paper tray.
- Check that the ADF cover is closed correctly.

Step	Cause	Remedy
1	Foreign object inside the area around ADF cover	Remove foreign objects inside the area around the ADF cover.
2	First side document scanning position actuator coming off	Reattach the first side document scanning position actuator.
3	ADF cover actuator caught in some sections of the machine	Reattach the ADF cover actuator.
4	Document pinch roller coming off	Reattach the document pinch roller.
5	Second side white bar coming off	Reattach the second side white bar.
6	Connection failure of first side document scanning position sensor PCB harness	Check the connection of the first side document scanning position sensor PCB harness, and reconnect it if necessary.
7	Abrasion of document feed roller	Replace the document feed roller ASSY 1.
8	First side document scanning position sensor failure	Replace the first side document scanning position sensor PCB ASSY.
9	ADF cover sensor failure	Replace the ADF cover/document detection sensor PCB ASSY.
10	Main PCB failure	Replace the main PCB ASSY.

■ Paper jam in the ADF

<User Check>

- Check that the paper used for the document is not thinner than 64 g/m^2.
- Check that the paper used for the document is not longer than 900 mm (400 mm when duplex scanning).
- Check that the document guide is adjusted to suit the document width.

Step	Cause	Remedy
1	Foreign object inside the ADF	Remove foreign objects inside the ADF
2	Second side document scanning position actuator coming off	Reattach the second side document scanning position actuator.
3	First side white bar coming off	Reattach the first side white bar.
4	Fed at an angle and jammed due to abrasion of separation roller	Replace the separation roller ASSY.
5	Connection failure of second side document scanning position sensor PCB harness	Check the connection of the second side document scanning position sensor PCB harness, and reconnect it if necessary.
6	Second side document scanning position sensor failure	Replace the second side document scanning position sensor PCB ASSY.
7	Main PCB failure	Replace the main PCB ASSY.

■ **Paper jam in the paper eject section of the ADF**

Step	Cause	Remedy
1	Foreign object in the ADF document eject path	Remove foreign objects in the ADF document eject path.
2	Document pinch roller coming off	Reattach the document pinch roller.
3	Abrasion of document ejection roller ASSY	Replace the ADF unit.
4	Main PCB failure	Replace the main PCB ASSY.

4.11.4 Document becomes wrinkled

<User Check>

- Check that the document guide is adjusted to suit the document size.
- Check that the document is not curled.

Step	Cause	Remedy
1	Abrasion of document separate roller	Replace the document separate roller ASSY.
2	Abrasion of document feed roller	Replace the document feed roller ASSY 1.

4.11.5 Document size is not detected correctly

<User Check>

- Check that the document size is within the standard.

Step	Cause	Remedy
1	Document scanning position actuator caught in some sections of the machine	Reattach the document scanning position actuator.
2	ADF motor failure	Replace the ADF motor.
3	Main PCB failure	Replace the main PCB ASSY.

4.12 Troubleshooting for Image Defects

4.12.1 Defect examples

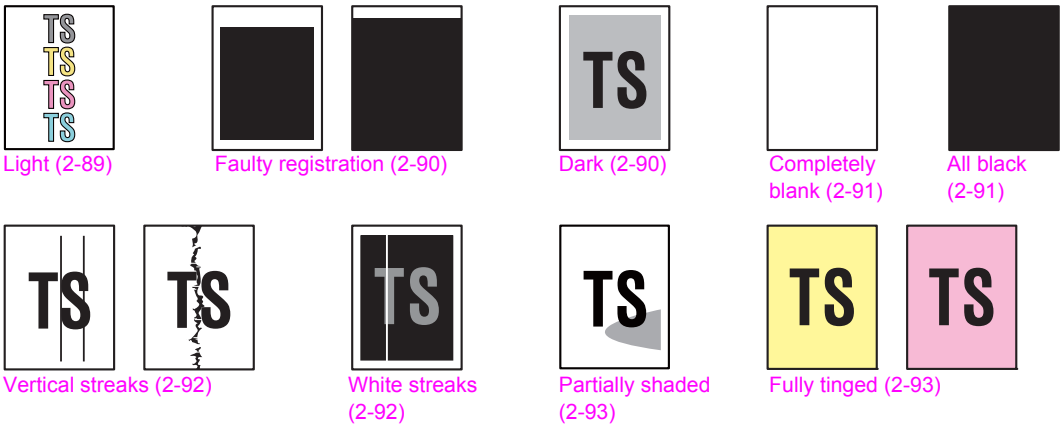

Fig. 2-14

4.12.2 Troubleshooting according to image defect

■ Light

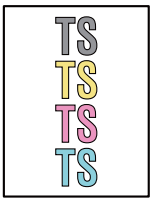

<User Check>

- Check that the contrast setting is not too light.
- Clean the scanner glass or ADF glass.
- Clean the document hold.

Step	Cause	Remedy
1	Incorrect white level correction data	Execute "Acquire white level data (function code: 55)".
2	First or second side CIS unit failure	Replace the first or second side CIS unit.
3	Main PCB failure	Replace the main PCB ASSY.

■ Faulty registration

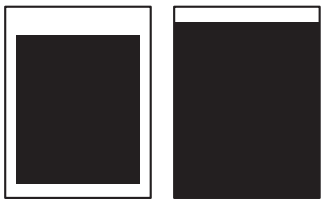

(1) ADF

Step	Cause	Remedy
1	Deviation of the scanning start position	Execute "Fine adjustment of scan start position. (function code: 54)".
2	First side document scanning position actuator caught in some sections of the machine	Reattach the first side document scanning position actuator.
3	Second side document scanning position actuator caught in some sections of the machine	Reattach the second side document scanning position actuator.

(2) Document scanner unit

Step	Cause	Remedy
1	Deviation of the scanning start position	Execute "Fine adjustment of scan start position. (function code: 54)".
2	First side CIS unit failure	Replace the first side CIS unit.

■ Dark

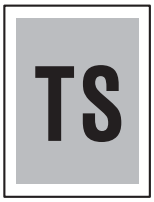

<User Check>

- Check that the contrast setting is not too dark.
- Clean the document hold.

Step	Cause	Remedy
1	Incorrect white level correction data	Execute "Acquire white level data (function code: 55)".
2	First or second side CIS unit failure	Replace the first or second side CIS unit.
3	Main PCB failure	Replace the main PCB ASSY.

■ Completely blank

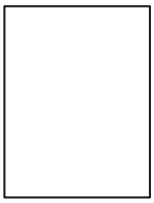

<User Check>

- Check that the document is not reversed.

Step	Cause	Remedy
1	Incorrect white level correction data	Execute "Acquire white level data (function code: 55)".
2	First or second side CIS unit failure	Replace the first or second side CIS unit.
3	Main PCB failure	Replace the main PCB ASSY.

■ All black

<User Check>

- Install all the latest firmwares.

Step	Cause	Remedy
1	Incorrect white level correction data	Execute "Acquire white level data (function code: 55)".
2	First or second side CIS unit failure	Replace the first or second side CIS unit.
3	Main PCB failure	Replace the main PCB ASSY.

■ Vertical streaks

<User Check>

- Clean the scanner glass or ADF glass.
- Clean the document hold.

Step	Cause	Remedy
1	Dirt inside of scanner glass	Clean the inside of the scanner glass.
2	Dirt inside of ADF glass	Clean the inside of the ADF glass.
3	First or second side CIS unit failure	Replace the first or second side CIS unit.
4	Scratch on scanner glass	Replace the document scanner unit.
5	Scratch on ADF glass	Replace the ADF unit.

■ White streaks

<User Check>

- Clean the scanner glass or ADF glass.
- Clean the document hold.

Step	Cause	Remedy
1	Dirt inside of scanner glass	Clean the inside of the scanner glass.
2	Dirt inside of ADF glass	Clean the inside of the ADF glass.
3	First or second side CIS unit failure	Replace the first or second side CIS unit.
4	Scratch on scanner glass	Replace the document scanner unit.
5	Scratch on ADF glass	Replace the ADF unit.

Confidential

■ Partially shaded

<User Check>

- Clean the scanner glass.

Step	Cause	Remedy
1	Dirt inside of scanner glass	Clean the inside of scanner glass.
2	Deformed document sponge	Replace the document scanner unit.

■ Fully tinged

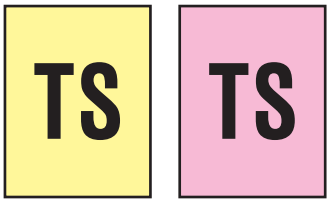

<User Check>

- Clean the scanner glass or ADF glass.

Step	Cause	Remedy
1	Incorrect white level correction data	Execute "Acquire white level data (function code: 55)".
2	First or second side CIS unit failure	Replace the first or second side CIS unit.
3	Main PCB failure	Replace the main PCB ASSY.

4.13 Troubleshooting for Fax Problems

4.13.1 Fax cannot be sent

<User Check>

- Check that the line cord is inserted into the socket correctly.
- Check that the dial function setting (tone/pulse) is correct.
- Check that the fax document is set in the ADF correctly.
- Check that the handset curled cord is inserted into the socket correctly.
- Check that the handset is placed on the handset holder correctly.
- Check that the number to be dialed is saved correctly in the telephone directory.
- Check that the receiver's machine works normally or the function you want to perform is equipped with the receiver's machine.
- Move the machine to the other place to check whether there is any noise source near the machine.

Step	Cause	Remedy
1	Connection failure of modem flat cable	Reconnect the modem flat cable.
2	Connection failure of CIS flat cable	Reconnect the CIS flat cable.
3	Connection failure of panel harness	Reconnect the panel harness.
4	Connection failure of touch panel flat cable (For models with touch panel)	Reconnect the touch panel flat cable.
5	Connection failure of key PCB flat cable (For models with touch panel)	Reconnect the key PCB flat cable.
6	Connection failure of ADF cover/ document detection sensor PCB harness	Reconnect the ADF cover/document detection sensor PCB harness.
7	Connection failure of hook harness (For models with handset)	Reconnect the hook harness.
8	Document detection actuator coming off	Reattach the document detection actuator.
9	ADF cover actuator coming off	Reattach the ADF cover actuator.
10	Hook actuator coming off (For models with handset)	Reattach the hook actuator.
11	Line cord breakage	Replace the line cord.
12	Hook switch PCB failure (For models with handset)	Replace the hook switch PCB ASSY.
13	ADF cover/document detection sensor PCB failure	Replace the ADF cover/document detection sensor PCB ASSY.
14	ADF motor failure	Replace the ADF motor.
15	First or second side CIS unit failure	Replace the first or second side CIS unit.
16	ADF drive gear failure	Replace the ADF unit.
17	Document scanner unit failure	Replace the document scanner unit.
18	Panel PCB failure	Replace the panel PCB ASSY.
19	Touch panel failure (For models with touch panel)	Replace the touch panel ASSY.
20	Key PCB failure (For models with touch panel)	Replace the panel unit.
21	Modem PCB failure	Replace the modem PCB ASSY.
22	Main PCB failure	Replace the main PCB ASSY.

4.13.2 Fax cannot be received

<User Check>

- Check that the line cord is inserted into the socket correctly.
- Check that the receiving mode setting is correct.
- Check that the handset is placed on the handset holder correctly.
- Check that the receiver's machine works normally or the function you want to perform is equipped with the receiver's machine.
- Move the machine to the other place to check whether there is any noise source near the machine.

Step	Cause	Remedy
1	Connection failure of modem flat cable	Check the connection of the modem flat cable, and reconnect it if necessary.
2	Line cord breakage	Replace the line cord.
3	Modem PCB failure	Replace the modem PCB ASSY.
4	Main PCB failure	Replace the main PCB ASSY.

4.13.3 Telephone communication is unavailable

<User Check>

- Check that the line cord is inserted into the socket correctly.
- Check that the dial function setting (tone/pulse) is correct.
- Check that the handset curled cord is inserted correctly.
- Check that the number to be dialed is saved correctly in the telephone directory.
- Check that the receiver's machine works normally.
- Move the machine to the other place to check whether there is no noise source near the machine.

Step	Cause	Remedy
1	Connection failure of modem flat cable	Reconnect the modem flat cable.
2	Connection failure of hook harness	Reconnect the hook harness.
3	Hook actuator coming off	Reattach the hook actuator.
4	Rubber key failure	Replace the panel unit.
5	Line cord breakage	Replace the line cord.
6	Handset curled cord breakage	Replace the handset curled cord.
7	Hook switch PCB failure	Replace the hook switch PCB ASSY.
8	Panel PCB failure	Replace the panel PCB ASSY.
9	Modem PCB failure	Replace the modem PCB ASSY.
10	Main PCB failure	Replace the main PCB ASSY.

4.13.4 Communication error occurs

<User Check>

- Check whether there is any noise source near the machine.

Step	Cause	Remedy
1	Connection failure of modem flat cable	Check the connection of the modem flat cable, and reconnect it if necessary.
2	Connection failure of modem FG harness	Screw tighten the screws of the modem FG harness.
3	Line cord breakage	Replace the line cord.
4	Modem PCB failure	Replace the modem PCB ASSY.
5	Main PCB failure	Replace the main PCB ASSY.

Confidential

4.14 Troubleshooting for Other Problems

4.14.1 Cannot print

<User Check>

- Turn the power switch OFF and then ON again.
- Check that the USB cable is connected to the host correctly.
- Check that the LAN cable is connected to the host correctly.
- Replace the USB cable.
- Replace the LAN cable.
- Check that the maximum printable page number has not been exceeded.
- Check that the PC Print is not forbidden.
- Check the print limit ID.
- Check the network connection.
- Check the relevant section in the Network Setting Guide.
- Check that the print data is not damaged.

Step	Cause	Remedy
1	Forgot print limit ID	Execute "Initialize EEPROM parameters (function code: 01)" to reset ID and let user to input a new ID.
2	Connection failure of the wireless LAN connector	Reconnect the wireless LAN connector.
3	Wireless LAN PCB failure	Replace the wireless LAN PCB.
4	Main PCB failure	Replace the main PCB ASSY.

4.14.2 Cannot update firmware

<User Check>

- Make sure that there is no other function running.
- Turn the power switch OFF and then ON again.

Step	Cause	Remedy
1	Firmware version does not match	Reinstall the latest sub firmware, panel firmware, demo firmware, and main firmware in this order.
2	Main PCB failure	Replace the main PCB ASSY.

4.14.3 Machine is not turned ON

<User Check>

- Check that the power cord is inserted into the terminal correctly.
- Turn the power off and on.

Step	Cause	Remedy
1	Rubber key attachment failure (For models without touch panel)	Reattach the rubber key.
2	Connection failure of panel harness	Reconnect the panel harness.
3	Connection failure of key PCB flat cable (For models with touch panel)	Reconnect the key PCB flat cable.
4	Connection failure of LCD flat cable	Reconnect the LCD flat cable.
5	Connection failure of LVPS harness	Reconnect the LVPS harness.
6	Power cord failure	Replace the power cord.
7	Panel PCB failure	Replace the panel PCB.
8	LCD failure	Replace the LCD.
9	Low-voltage power supply PCB failure	Replace the low-voltage power supply PCB ASSY.
10	Main PCB failure	Replace the main PCB ASSY.

Confidential

CHAPTER 3 DISASSEMBLY/REASSEMBLY

1. SAFETY PRECAUTIONS

To avoid creating secondary problems by mishandling, follow the warnings and precautions below during maintenance work.

WARNING

Some parts inside the machine are extremely hot immediately after the machine is used. When opening the front cover ASSY or back cover to access any parts inside the machine, never touch the shaded parts shown in the following figures.

- Be careful not to lose screws, washers, or other parts removed.
- Be sure to apply grease to applicable positions specified in this chapter.
- When using soldering irons or other heat-generating tools, take care not to accidentally damage parts such as wires, PCBs and covers.
- Static electricity charged in your body may damage electronic parts. When transporting PCBs, be sure to wrap them in conductive sheets.
- When replacing the PCB and all the other related parts, put on a grounding wrist band and perform the job on a static mat. Also take care not to touch the conductor sections on the flat cables or on the wire harness.
- After disconnecting flat cables, check that each cable is not damaged at its end or shortcircuited.
- When connecting flat cables, do not insert them at an angle. After insertion, check that the cables are not at an angle.
- When connecting or disconnecting harnesses, hold the connector body, not the cables. If the connector is locked, release it first.
- After a repair, check not only the repaired portion but also harness treatment. Also check that other related portions are functioning properly.
- Forcefully closing the front cover without mounting the toner cartridge and the drum unit can damage the machine.
- After assembly, it is recommended to conduct dielectric strength test and continuity test.
- When mounting the inlet, check that the inlet is housed in the frame completely and that the harness is not caught in the frame.
- The insulation sheet should not be damaged.
- After a repair, update the firmware to the latest version.

2. PACKING

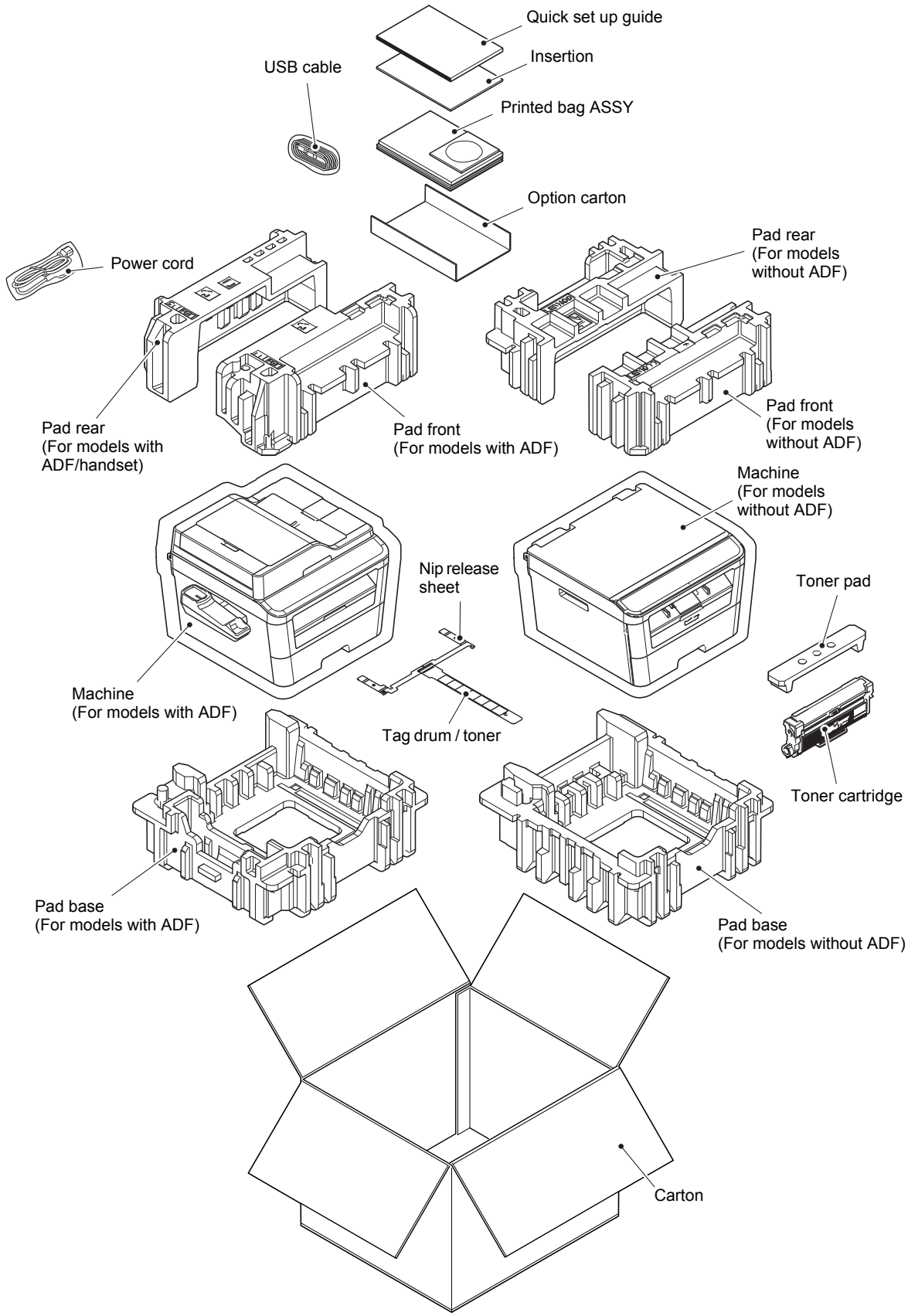

Fig. 3-1

3. SCREW CATALOGUE

Taptite bind B

Taptite bind B M3x10	
Taptite bind B M4x12	

Taptite flat B

Taptite flat B M3x10	

Taptite cup S

Taptite cup S M3x6 SR	
Taptite cup S M3x8 SR	
Taptite cup S M3x12	

Taptite pan B

Taptite pan B M4x14	

Taptite cup B

Taptite cup B M3x8	
Taptite cup B M3x10	

Screw bind

Screw bind M3x4	

Screw pan (S/P washer)

Screw pan (S/P washer) M3x6	
Screw pan (S/P washer) M3.5x6	
Screw pan (S/P washer) M3x12DB	

Fig. 3-2

Confidential

4. SCREW TORQUE LIST

Location of screw	Screw type	Q'ty	Tightening torque N·m (kgf·cm)
Cord hook	Taptite cup B M3x8	2	0.4±0.05 (4±0.5)
Side cover R	Taptite bind B M4x12	1	0.8±0.1 (8±1)
Inner chute ASSY	Taptite bind B M4x12	2	0.8±0.1 (8±1)
Side cover L	Taptite bind B M4x12	1	0.8±0.1 (8±1)
Handset holder ASSY	Taptite bind B M4x12	2	0.8±0.1 (8±1)
Upper handset holder	Taptite cup B M3x8	1	0.5±0.1 (5±1)
Document scanner FG harness	Taptite cup S M3x8 SR	1	0.5±0.05 (5±0.5)
ADF FG harness (Main shield plate side)	Taptite cup S M3x8 SR	1	0.5±0.05 (5±0.5)
ADF FG harness (Lower chute support plate side)	Taptite cup S M3x8 SR	1	0.7±0.1 (7±1)
Hinge ASSY L (For models with ADF)	Taptite bind B M4x12	1	0.8±0.1 (8±1)
	Taptite cup S M3x12	3	0.8±0.1 (8±1)
Hinge R support (For models with ADF)	Taptite cup B M3x10	1	0.5±0.05 (5±0.5)
Hinge arm R (For models with ADF)	Taptite cup B M3x10	3	0.5±0.05 (5±0.5)
ADF front cover	Taptite cup B M3x10	2	0.5±0.05 (5±0.5)
Upper document chute ASSY	Taptite cup B M3x10	4	0.5±0.05 (5±0.5)
Lower document chute ASSY	Taptite cup B M3x10	3	0.5±0.05 (5±0.5)
Drive frame ASSY	Taptite cup B M3x10	3	0.5±0.05 (5±0.5)
ADF motor	Screw pan (S/P washer) M3x6	1	0.35±0.05 (3.5±0.5)
Hinge L support (For models without ADF)	Taptite cup B M3x10	1	0.5±0.05 (5±0.5)
Hinge R support (For models without ADF)	Taptite cup B M3x10	1	0.5±0.05 (5±0.5)
Hinge arm L (For models without ADF)	Taptite cup B M3x10	3	0.5±0.05 (5±0.5)
Hinge arm R (For models without ADF)	Taptite cup B M3x10	3	0.5±0.05 (5±0.5)
Panel unit	Taptite cup B M3x10	4	0.5±0.05 (5±0.5)
Shield plate cover	Taptite cup B M3x10	4	0.5±0.05 (5±0.5)
Panel key PCB presser	Taptite cup B M3x10	2	0.5±0.05 (5±0.5)
Document scanner top cover	Taptite bind B M4x12	6	0.8±0.1 (8±1)
Modem FG harness LVPS	Screw pan (S/P washer) M3.5x6	2	0.6±0.1 (6±1)
Modem FG harness main	Screw pan (S/P washer) M3.5x6	1	0.6±0.1 (6±1)
	Taptite cup S M3x8 SR	1	0.5±0.1 (5±1)
Modem shield plate	Taptite bind B M4x12	2	0.8±0.1 (8±1)

Location of screw	Screw type	Q'ty	Tightening torque N·m (kgf·cm)
Modem shield cover	Screw pan (S/P washer) M3.5x6	1	0.6±0.1 (6±1)
Modem PCB ASSY	Taptite cup S M3x6 SR	2	0.5±0.1 (5±1)
Joint cover ASSY	Taptite bind B M4x12	4	0.8±0.1 (8±1)
Fuser unit	Taptite pan B M4x14	2	0.8±0.1 (8±1)
LVPS shield plate cover	Taptite cup S M3x8 SR	2	0.5±0.1 (5±1)
	Screw pan (S/P washer) M3.5x6	1	0.5±0.1 (5±1)
Low-voltage power supply PCB ASSY	Screw pan (S/P washer) M3.5x6	1	0.5±0.1 (5±1)
	Taptite flat B M3x10*	1	0.5±0.1 (5±1)
	Taptite cup S M3x8 SR	2	0.5±0.1 (5±1)
High-voltage power supply PCB ASSY	Taptite cup S M3x8 SR	1	0.5±0.1 (5±1)
Laser unit	Taptite cup S M3x8 SR	4	0.8±0.1 (8±1)
Main PCB FG plate 1	Taptite cup S M3x8 SR	2	0.6±0.1 (6±1)
Main PCB ASSY	Taptite cup S M3x8 SR	3	0.6±0.1 (6±1)
Front chute ASSY	Taptite bind B M4x12	2	0.8±0.1 (8±1)
Main frame L ASSY	Taptite bind B M4x12 (6a) (7a)	3	0.8±0.1 (8±1)
	Taptite bind B M4x12 (6c)	1	0.75±0.05 (7.5±0.5)
	Taptite cup S M3x6 SR	1	0.5±0.1 (5±1)
	Taptite cup S M3x8 SR	3	0.5±0.1 (5±1)
Flat cable guide	Taptite bind B M4x12	1	0.8±0.1 (8±1)
Laser L FG plate	Screw pan (S/P washer) M3x12DB	1	0.5±0.1 (5±1)
Motor drive sub ASSY	Taptite bind B M4x12	3	0.8±0.1 (8±1)
Motor plate calking ASSY	Taptite cup S M3x8 SR	1	0.8±0.1 (8±1)
Main motor	Screw bind M3x4	3	0.65±0.05 (6.5±0.5)
Main shield plate	Taptite cup S M3x8 SR	1	0.5±0.1 (5±1)
	Screw pan (S/P washer) M3x12DB	1	0.5±0.1 (5±1)
Laser R FG plate	Taptite cup S M3x8 SR	1	0.8±0.1 (8±1)
LVPS shield plate	Taptite cup S M3x8 SR	1	0.5±0.1 (5±1)
	Taptite bind B M4x12	1	0.8±0.1 (8±1)
Main frame R ASSY	Taptite cup S M3x6 SR	1	0.8±0.1 (8±1)
	Taptite bind B M4x12 (5a)	1	0.75±0.5 (7.5±5)
	Taptite bind B M4x12 (5b)	1	0.8±0.1 (8±1)
Registration front/rear actuator holder ASSY	Taptite bind B M3x10	1	0.5±0.1 (5±1)

* For inlet models
Models with inlet: Germany/U.K./Switzerland/Italy/Israel/Russia/France/Belgium/Netherlands/PAN-NORDIC/Iberia/CEE-General/Poland/Argentina/Chile/Peru

5. LUBRICATION

Lubricating oil type (Maker name)	Lubrication point		Quantity of lubrication
BDX313 (A) (Kanto Kasei)	Hinge ASSY L	9 places	2.0 mm dia. ball
FLOIL BG-10KS (Kanto Kasei)	Fuser gear 67R/40R	3 places	1.5 to 2.0 mm dia. ball

■ Hinge ASSY L

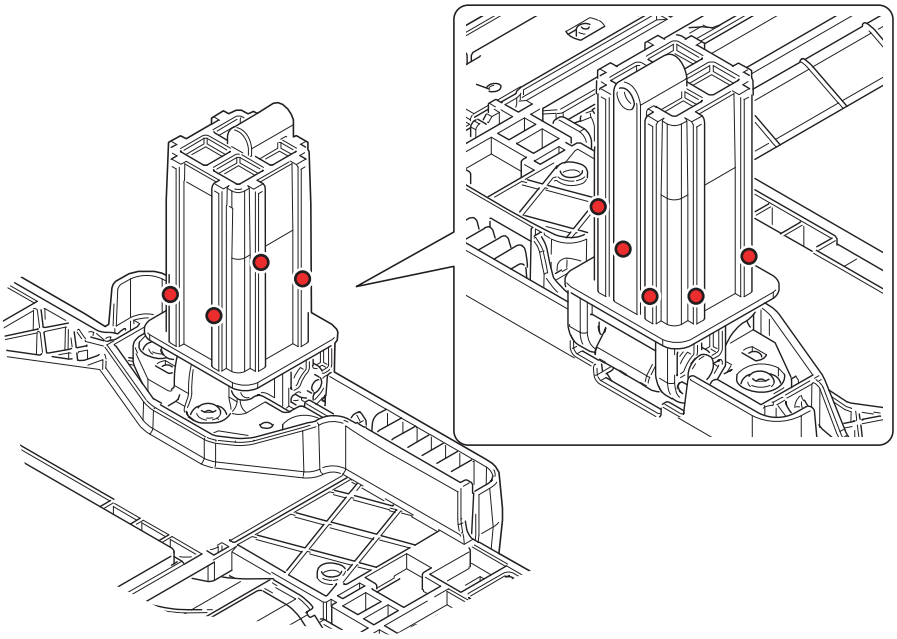

Fig. 3-3

■ Fuser gear 67R/40R

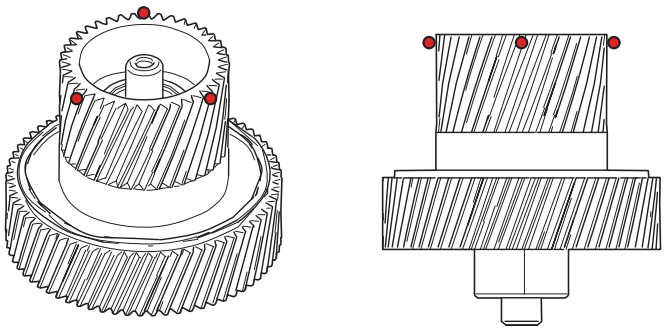

Fig. 3-4

Confidential

6. OVERVIEW OF GEARS

<Layout view>

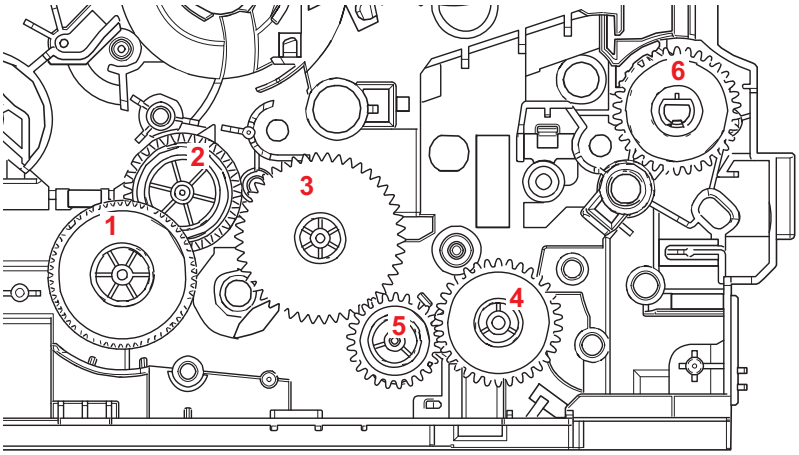

Fig. 3-5

<Development view>

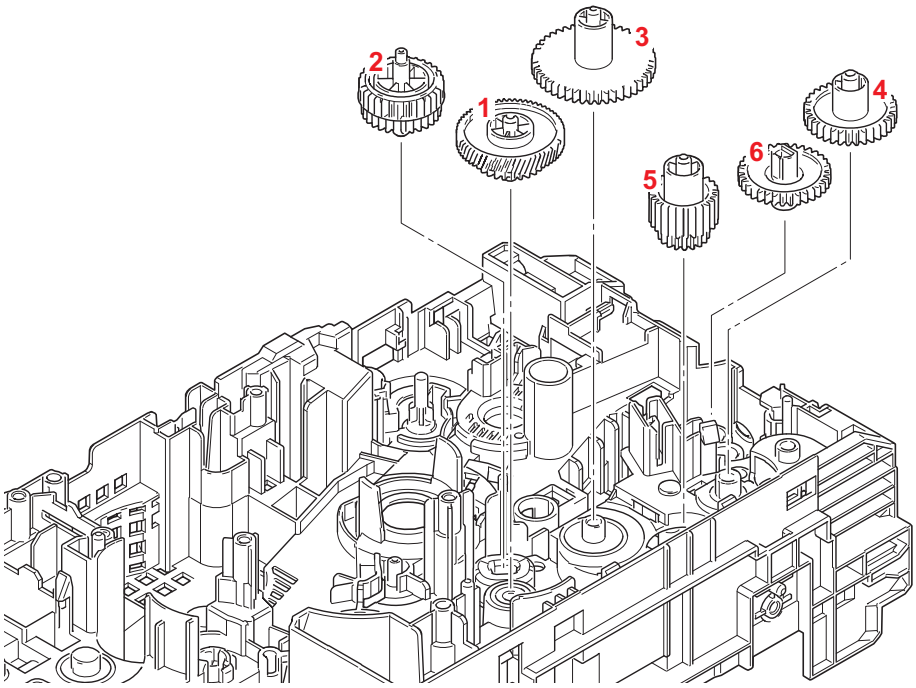

Fig. 3-6

Note:

- When handling gears, make sure that frame L faces up. Otherwise all gears come off.

<Name of gears>

1	LY9021	PF gear 61R/26	4	LY9025	PF gear 34
2	LY9022	PF gear 31/29	5	LY9024	PF gear 25/18
3	LY9023	PF gear 46	6	LY9088	Feeder gear 34

* These parts are subject to change without notice.

<Layout view>

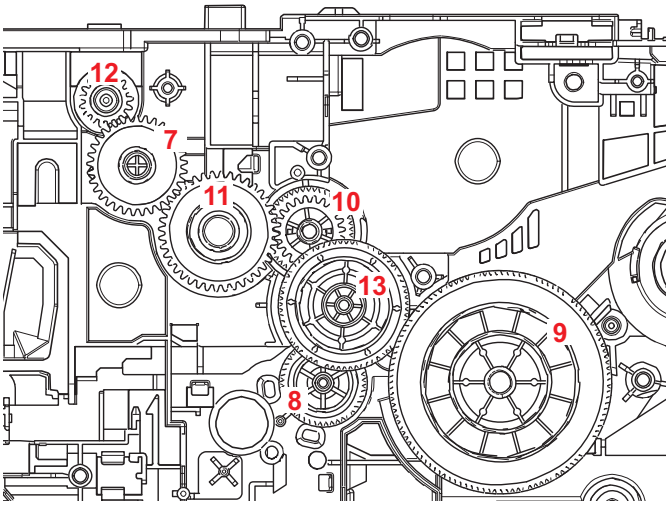

Fig. 3-7

<Development view>

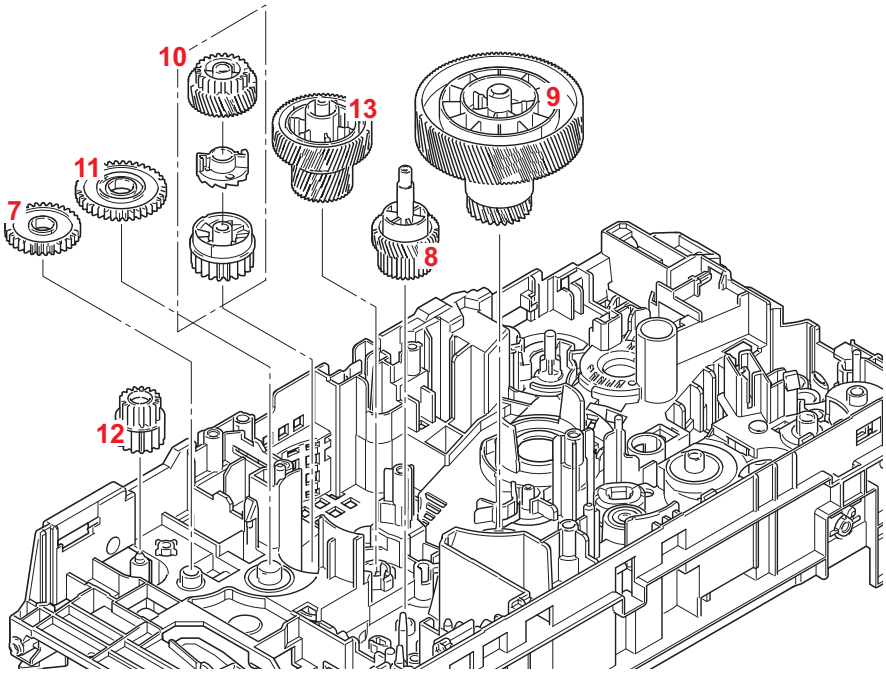

Fig. 3-8

Note:

- When handling gears, make sure that frame L faces up. Otherwise all gears come off.

<Name of gears>

7	LY9006	Ejector gear 33	11	LY9005	Ejector gear 40
8	LY9008	DX gear 44/32	12	LY9007	Ejector gear 17/16
9	LY9026	Drum gear 115L/26L	13	LY9029	Fuser gear 67R/40R
10	LY9030	Fuser gear oneway 45L/23			
	LY9032	Fuser clutch			
	LY9031	Fuser gear oneway 21			

* These parts are subject to change without notice.

Confidential

7. HARNESS ROUTING

1 Right side of the machine

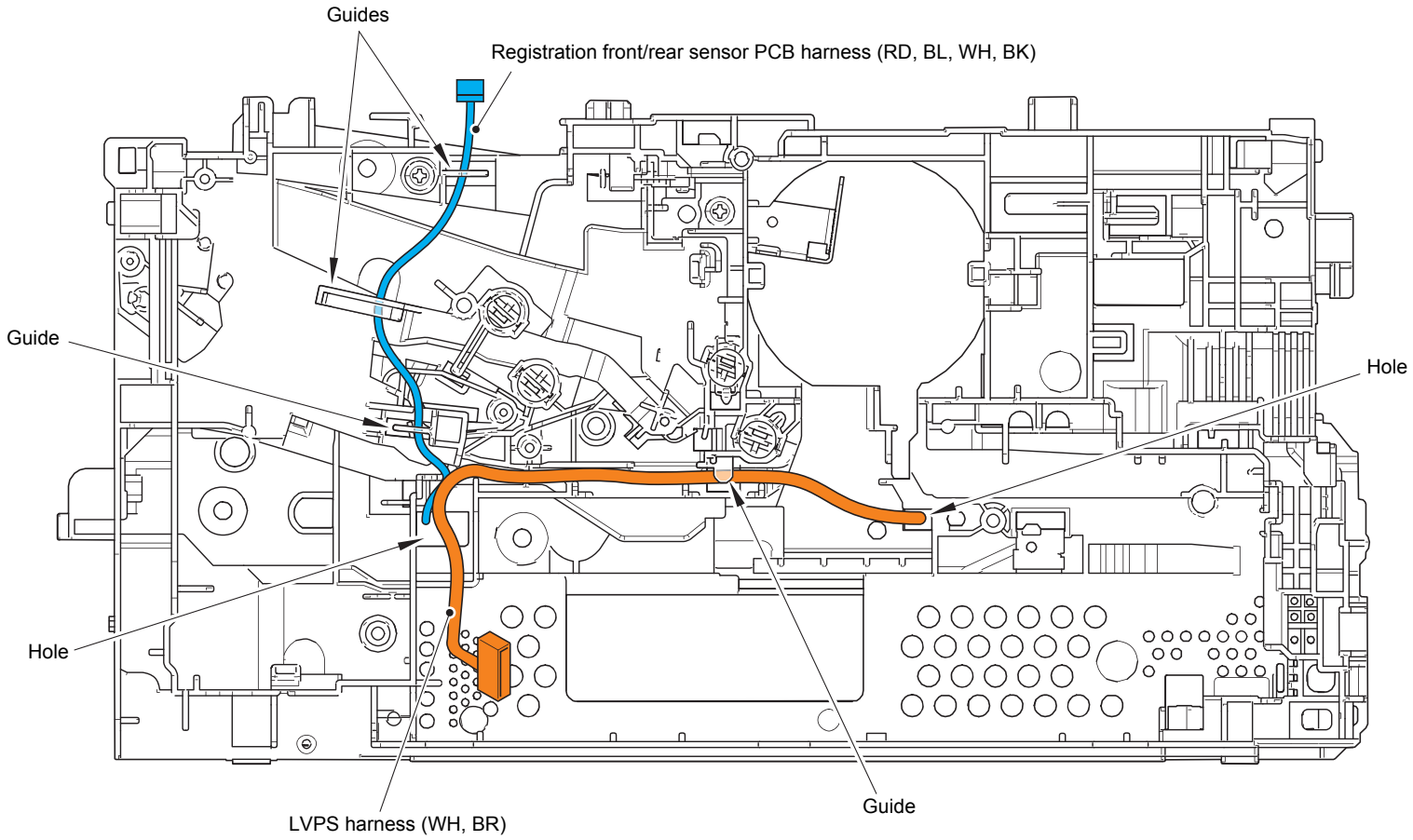

Harness colors are subject to change for some reason.

2 Top side of the registration chute

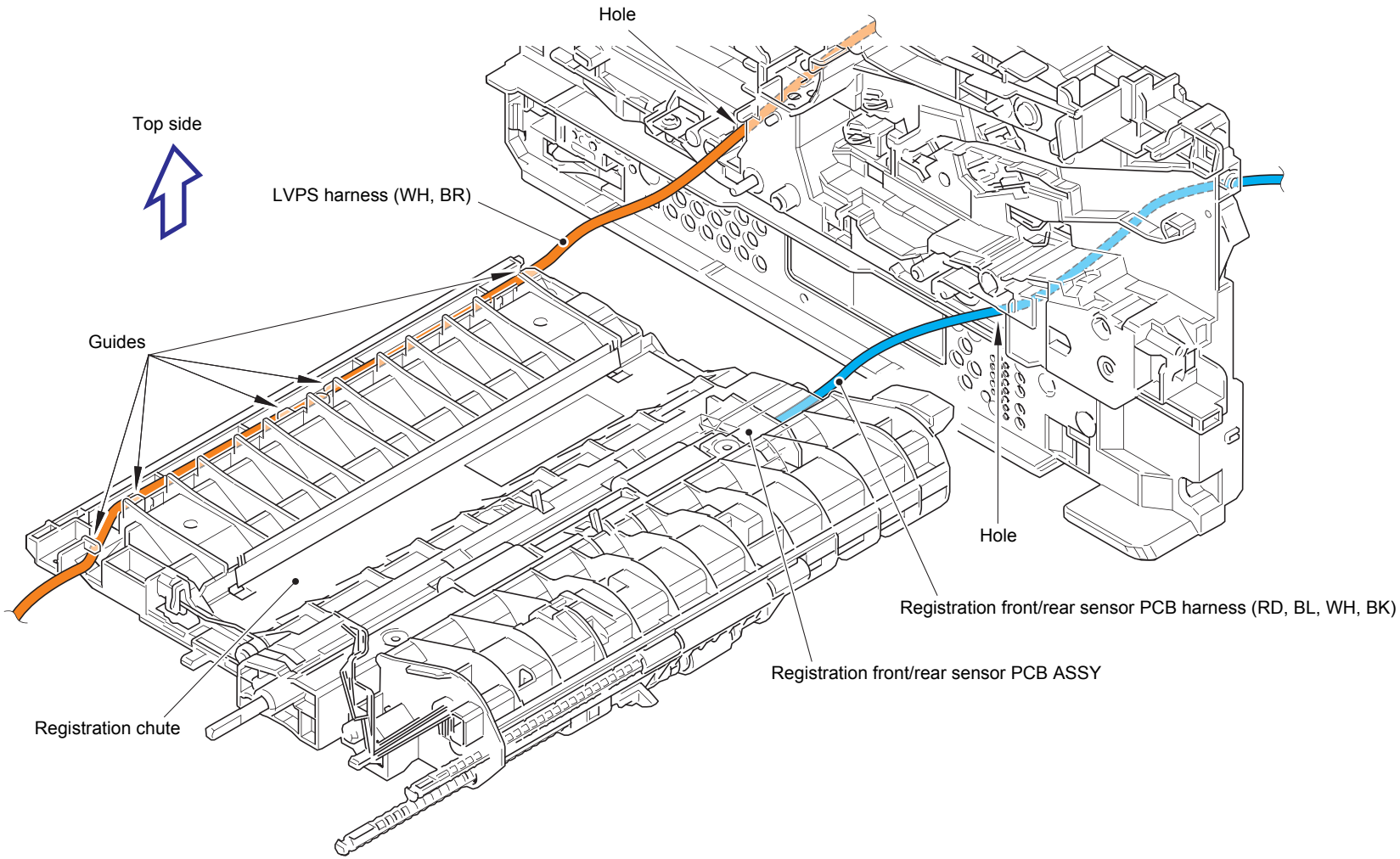

Harness colors are subject to change for some reason.

3 Left side of the machine

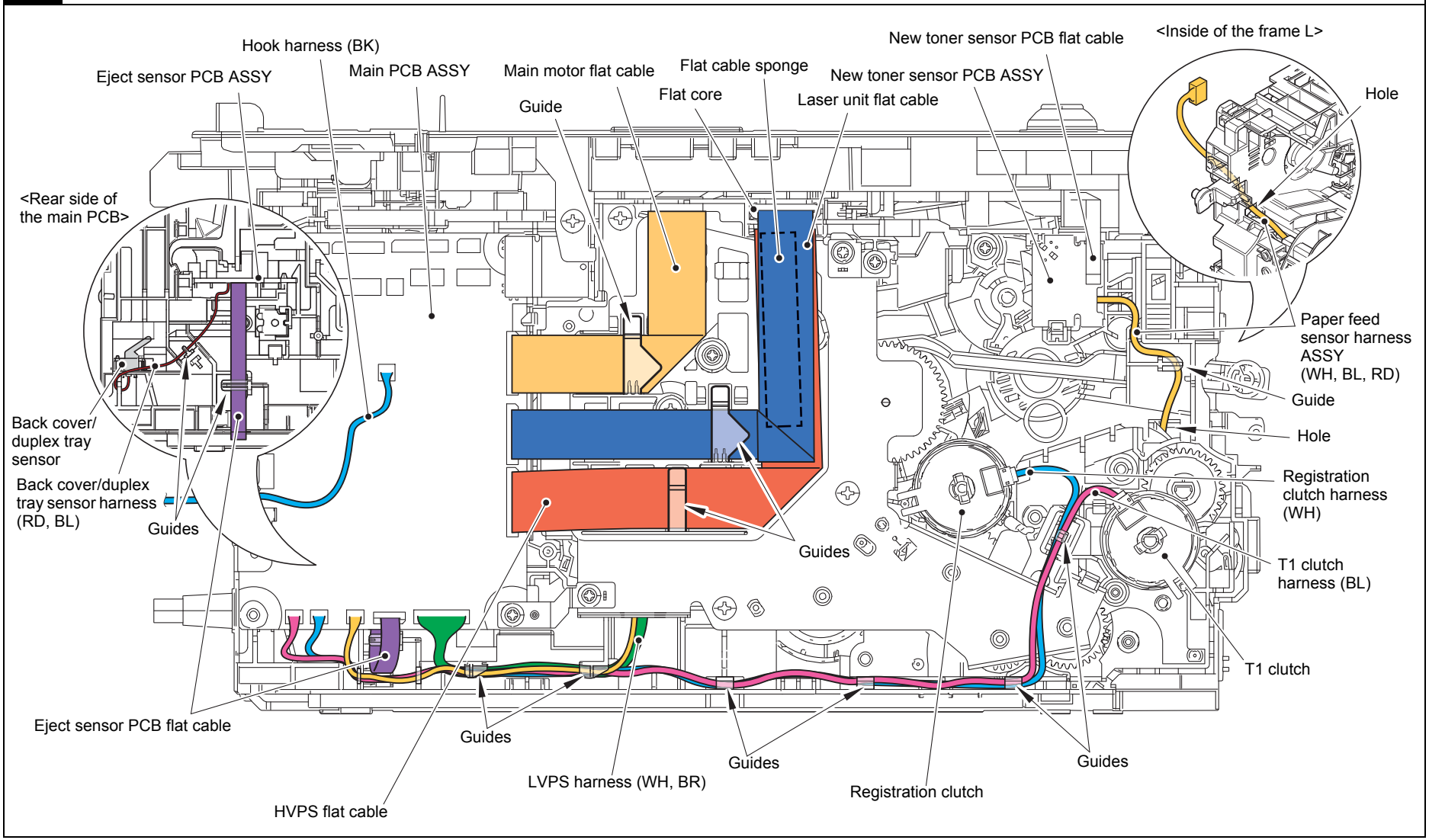

Harness colors are subject to change for some reason.

4 Rear side of the machine

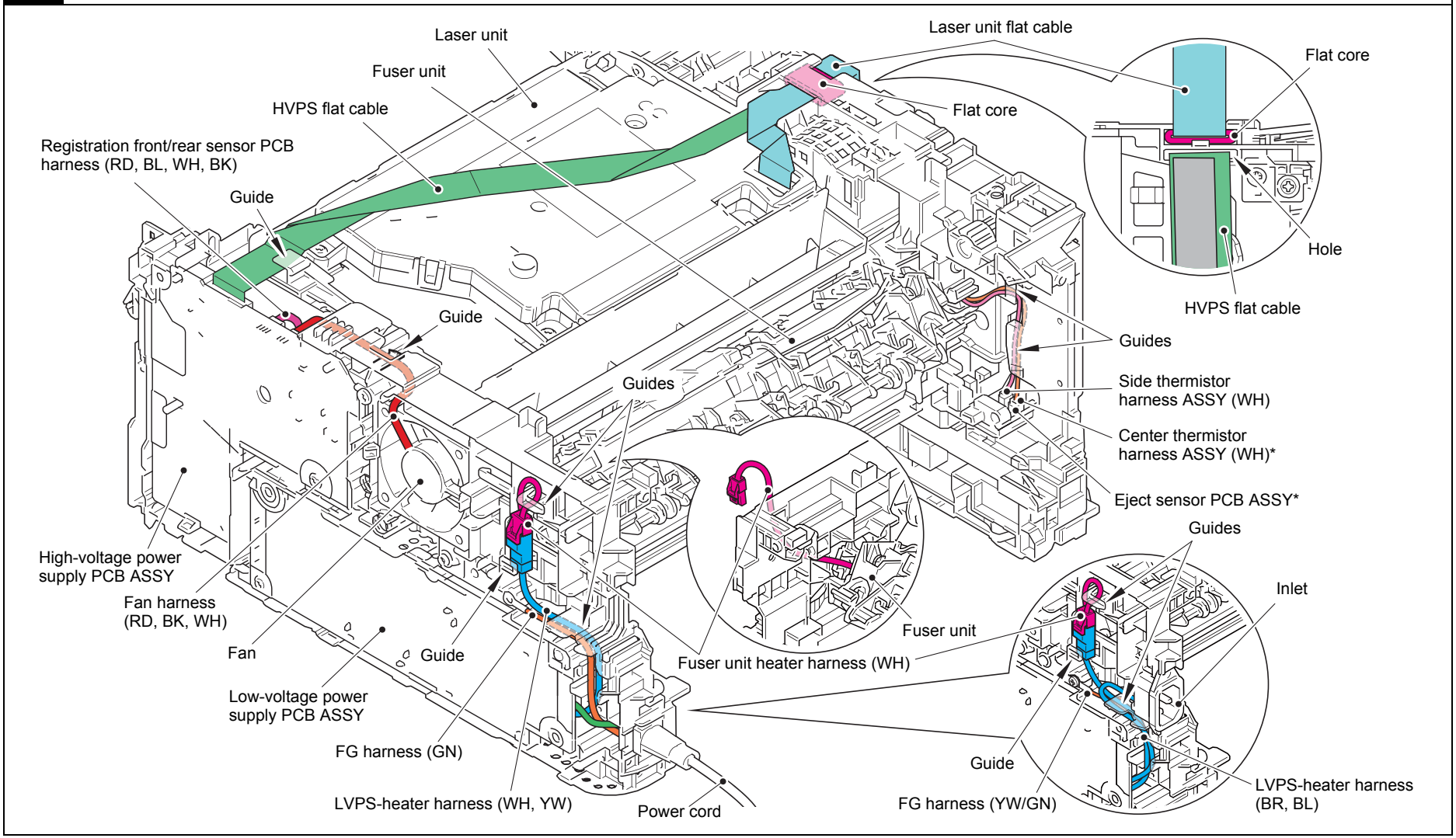

Harness colors are subject to change for some reason.

* Center thermistor has a black and blue connectors (230V models only). The black connector may be connected to the blue insertion port and vice versa.

5 New toner sensor PCB ASSY

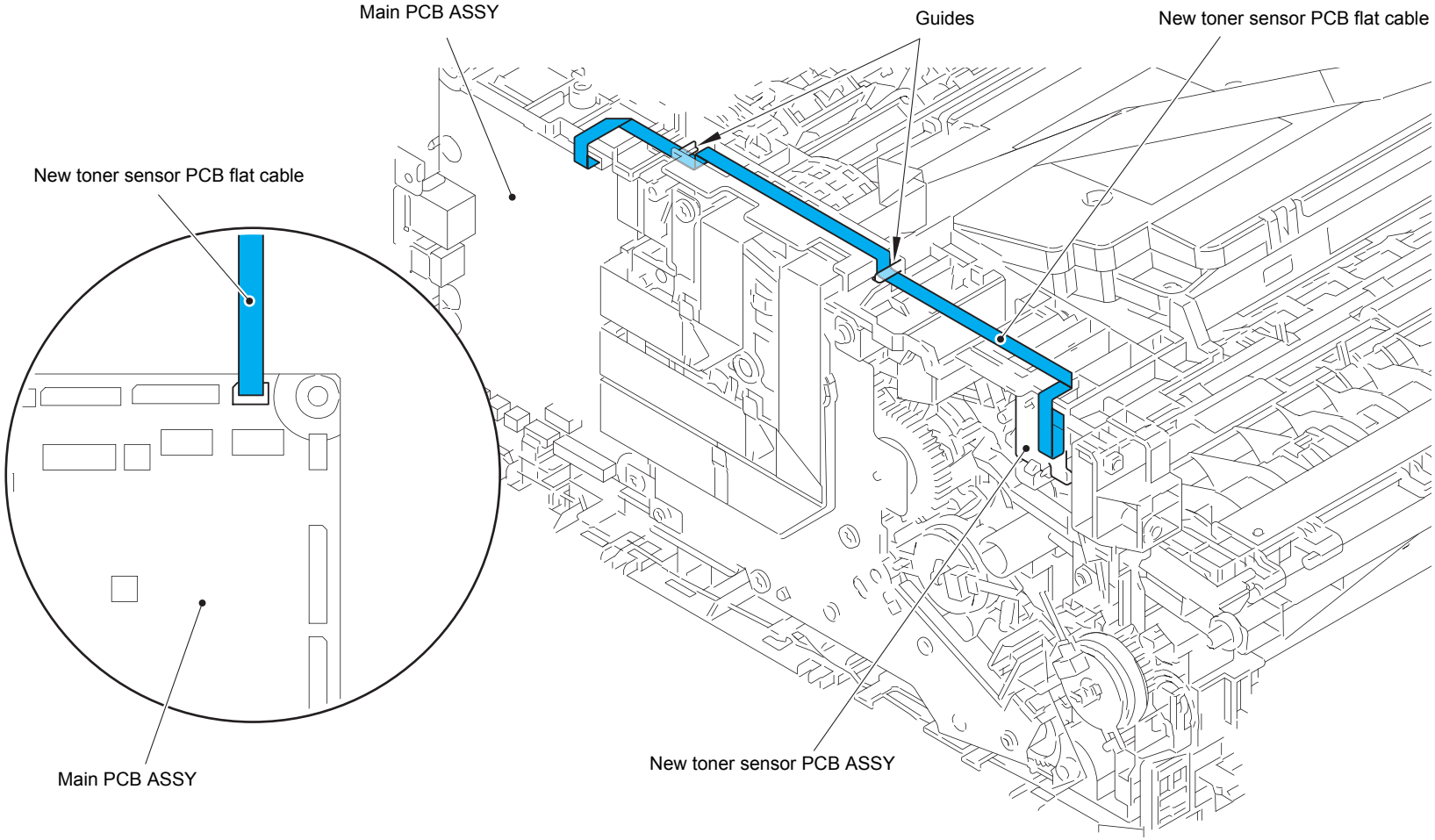

6 Speaker unit, Modem (Main PCB side)

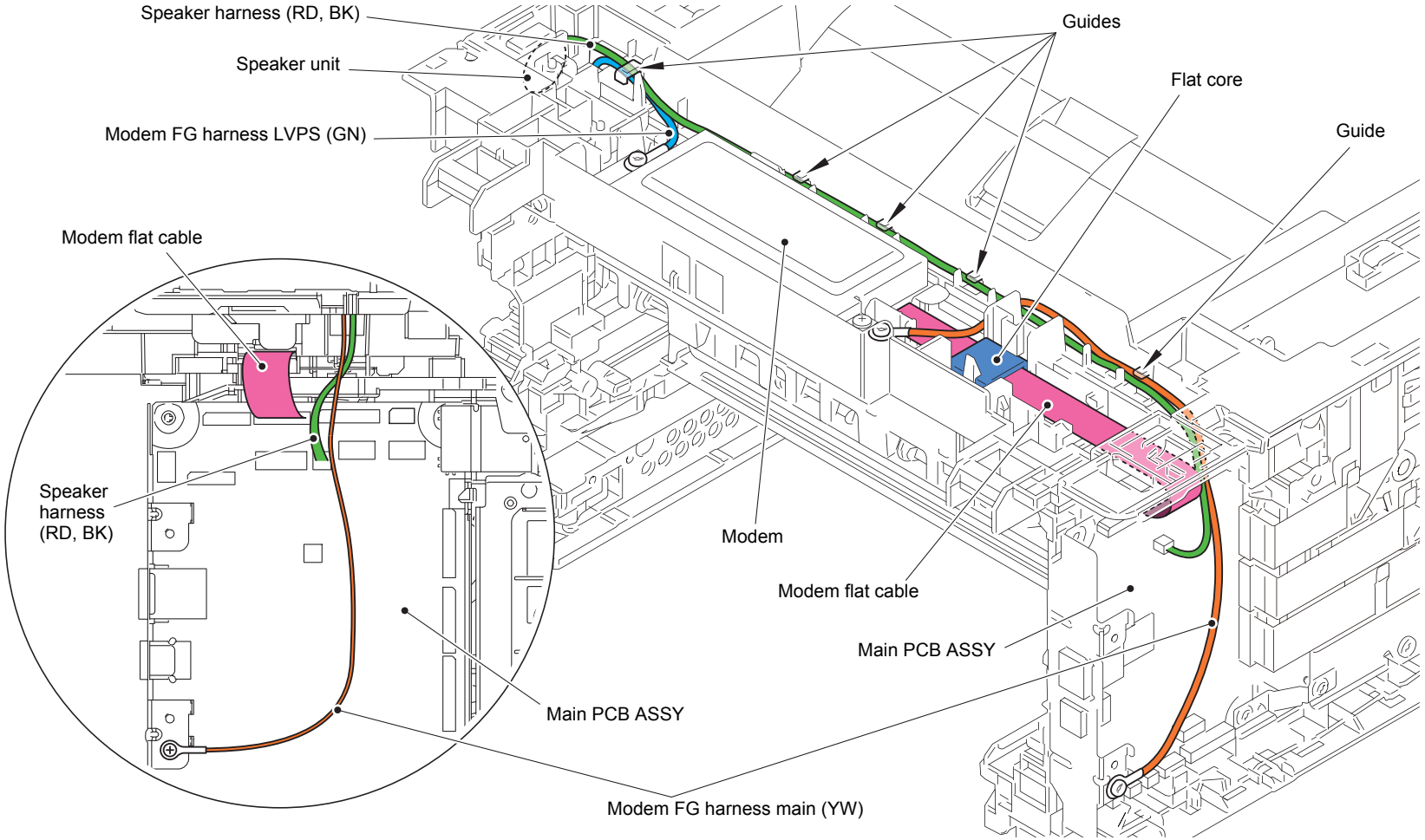

Harness colors are subject to change for some reason.

7 Speaker unit, Modem (LVPS side)

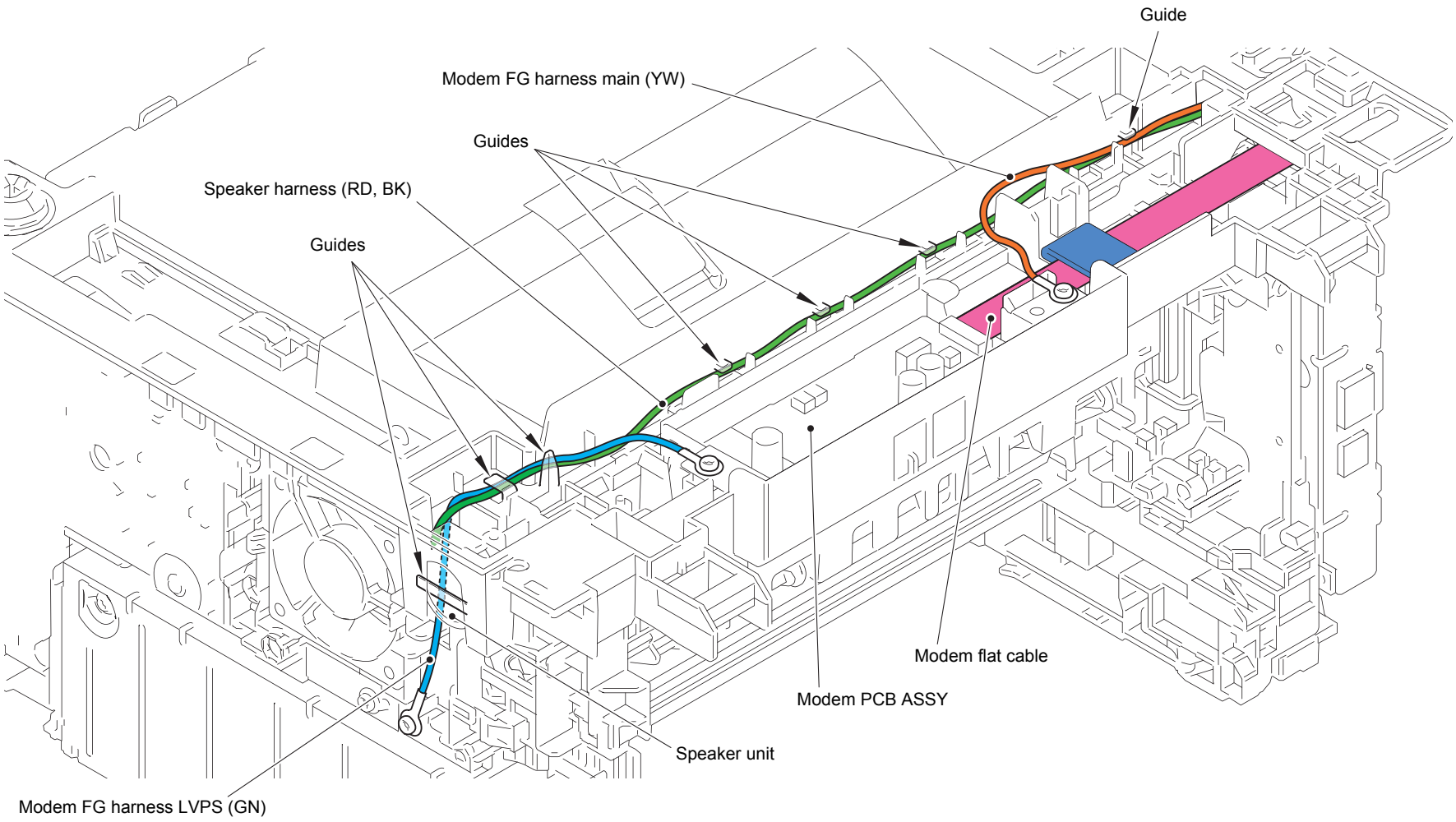

Harness colors are subject to change for some reason.

8 ADF unit

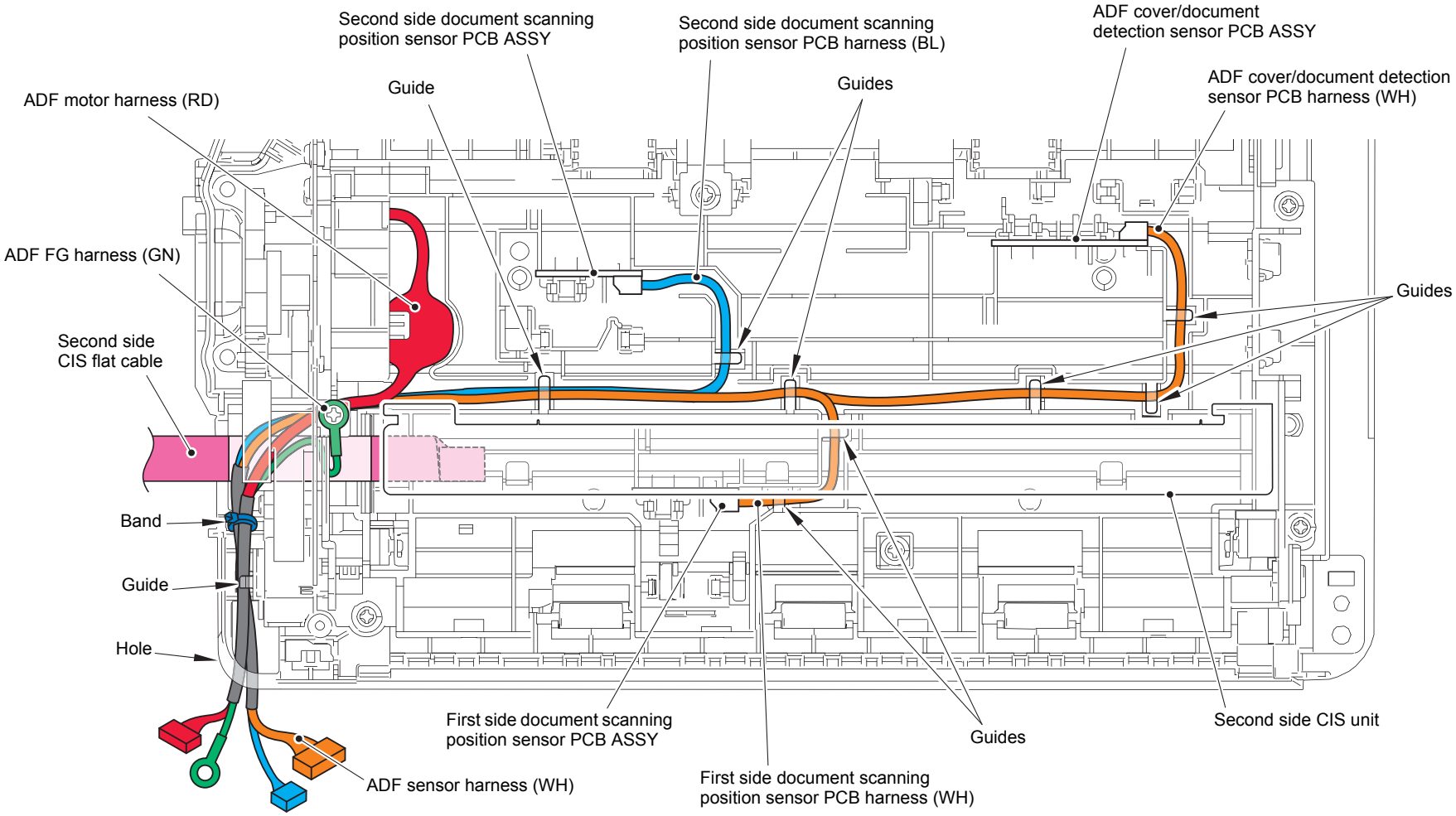

Harness colors are subject to change for some reason.

9 Scanner unit

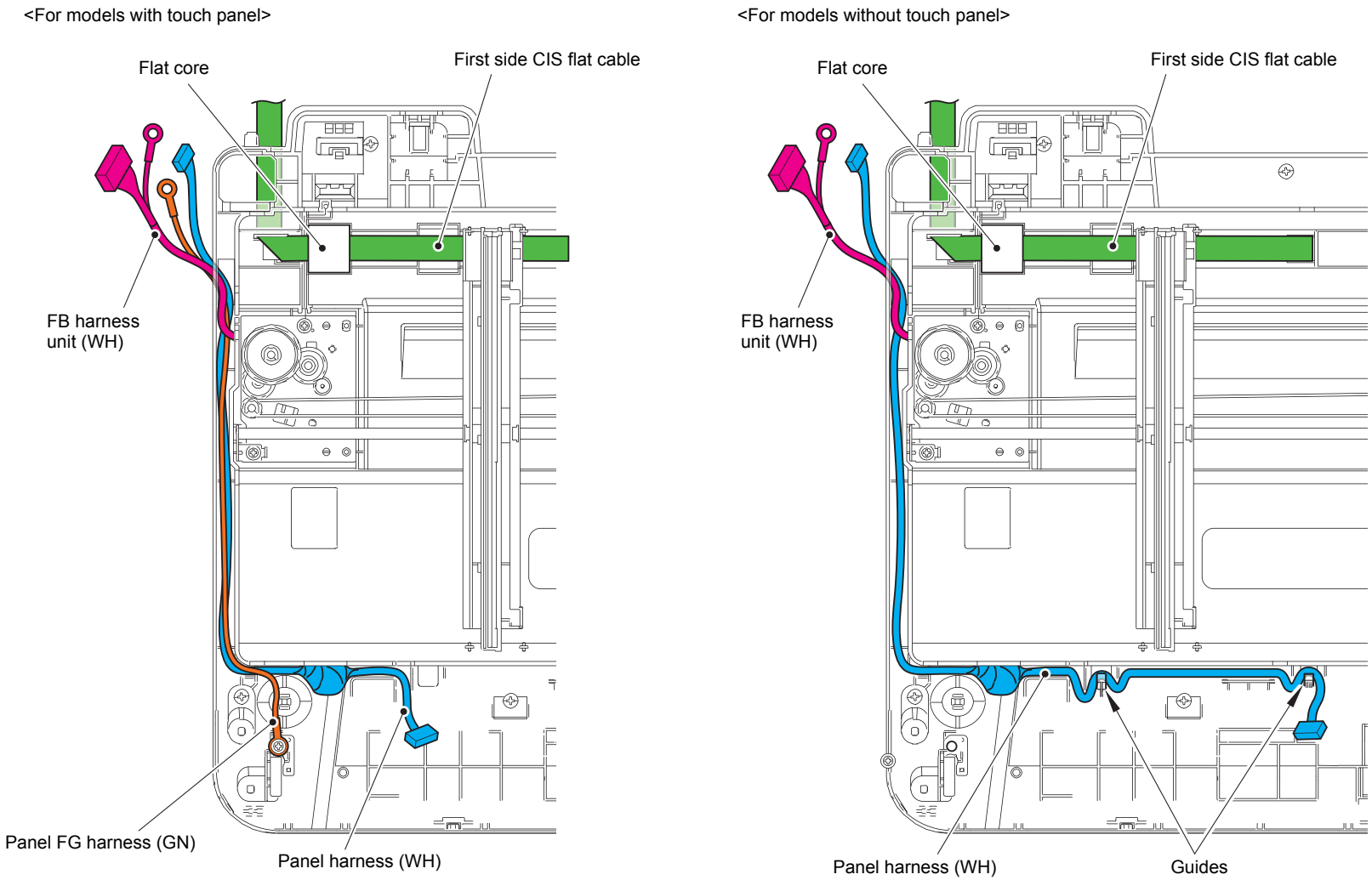

Harness colors are subject to change for some reason.

10 Panel unit (Touch panel models only)

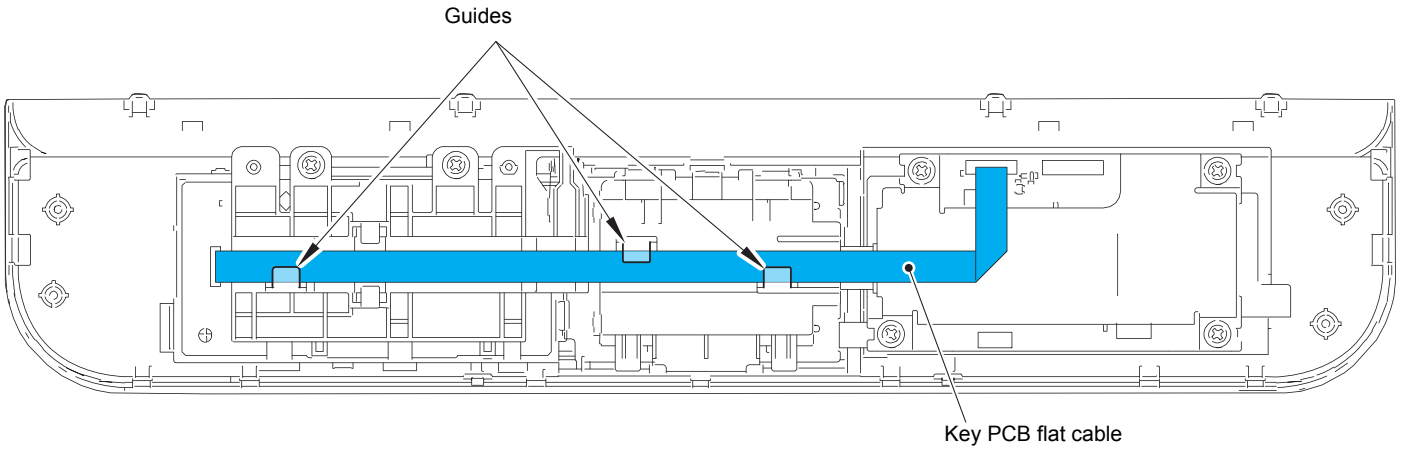

11 Hook switch PCB ASSY

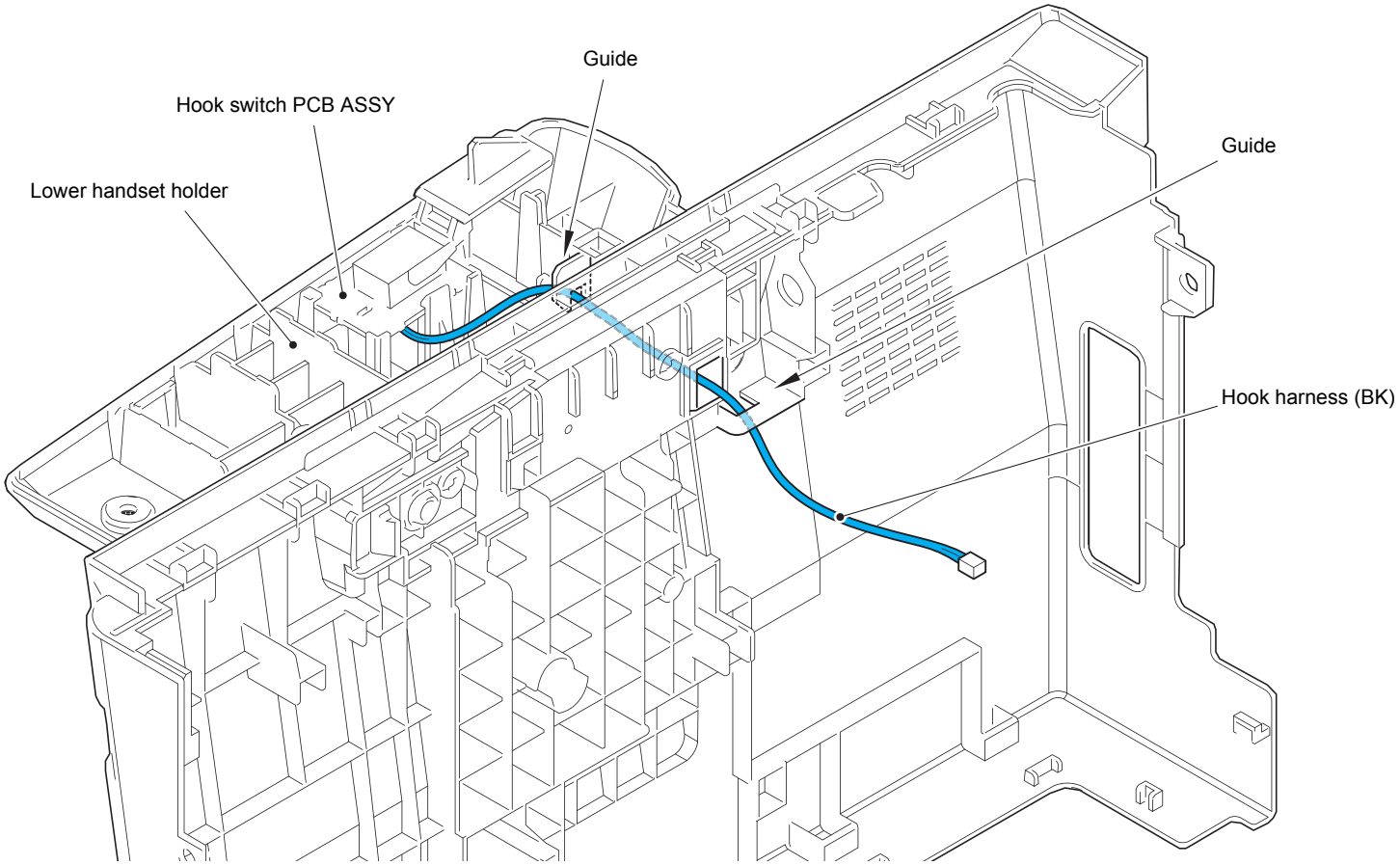

Harness colors are subject to change for some reason.

12 ADF unit - Main PCB ASSY

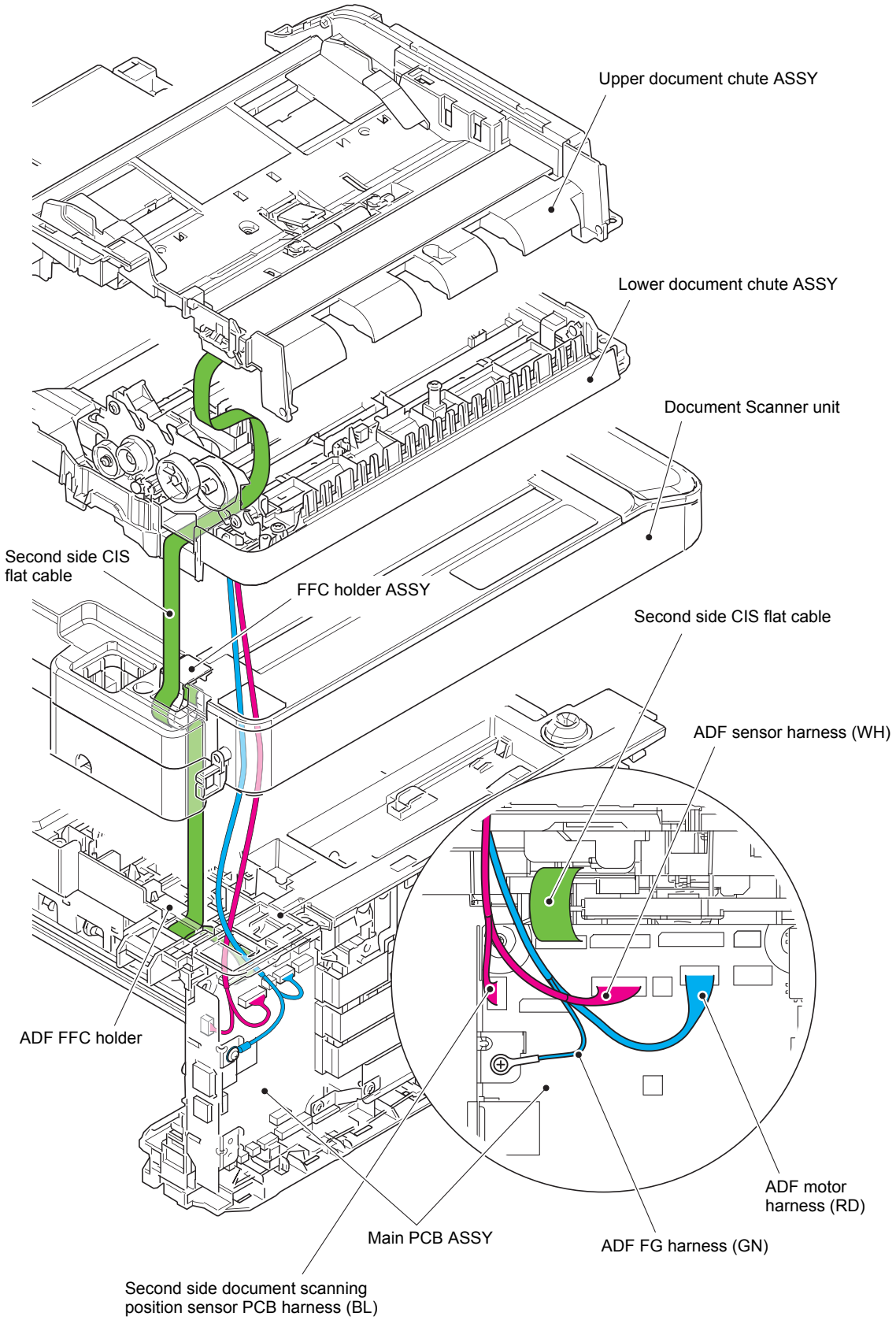

Harness colors are subject to change for some reason.

13 Document scanner unit - Main PCB ASSY

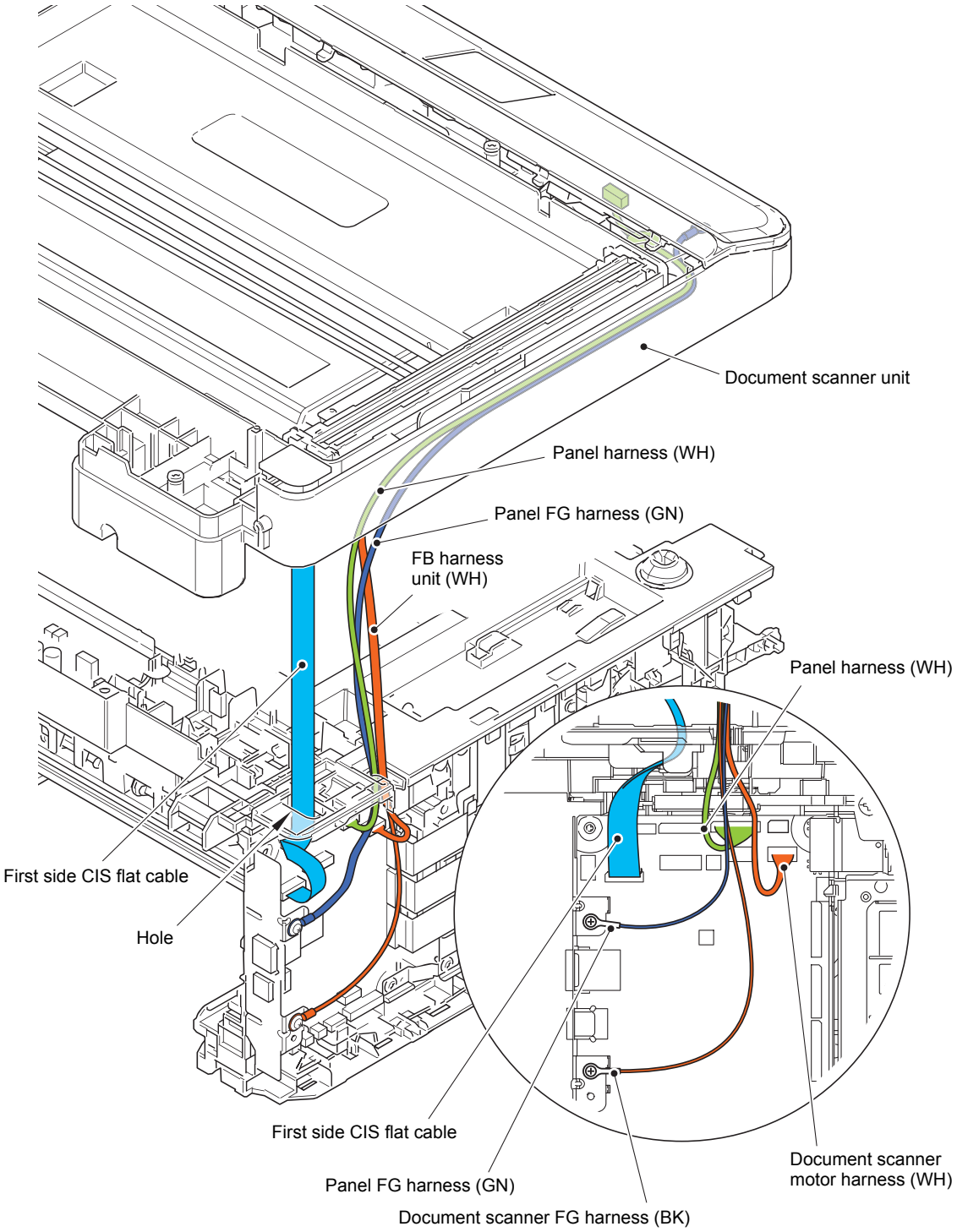

Harness colors are subject to change for some reason.

8. DISASSEMBLY FLOW CHART

Disassembly / Reassembly (second)

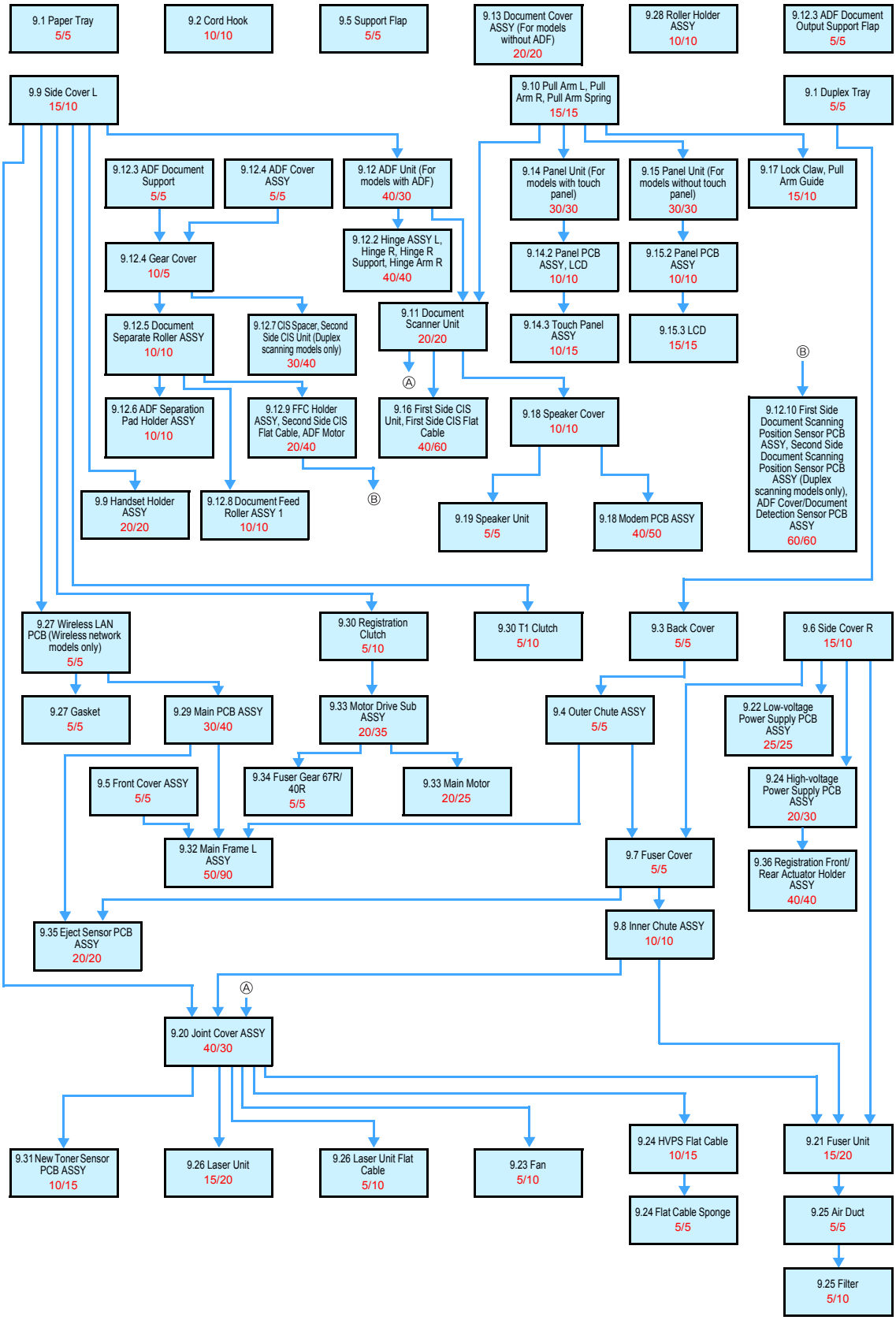

9. DISASSEMBLY PROCEDURE

9.1 Preparation

■ Transferring Received FAX Data

In case of machine failure, unplugging the power cord is required for sending the machine to repair. In this regard, received fax data left in the machine would be lost.

To prevent such data loss, fax files left in the machine can be transferred to other fax machines or PCs. Service personnel should instruct end users (e.g., by telephone) to transfer data by themselves using the procedure below.

Note:

- The number of files that can be transferred at a time is 99. When there are 100 or more files, the operation procedure below must be performed several times to transfer all files.

TIP:

- If there are both color and monochrome data in a file to be transferred, the monochrome data will be transferred first. If the receiver machine does not support the color function, the sender machine cannot transfer color data, resulting in an error.

Transfer the received FAX data as described in "1.3.15 Transfer received fax data / log information (function code: 53) (fax models only)" in Chapter 5.

■ Disconnecting Cables and Removing Accessories

Prior to proceeding with the disassembly procedure,

(1) Disconnect the following:

- USB cable (if connected)
- LAN cable (if connected)
- Handset curled cord (if connected)
- Line cord (if connected)

(2) Remove the following:

- Paper tray
- Toner cartridge and drum unit
- Duplex tray
- LAN port cap
- EXT cap
- Handset

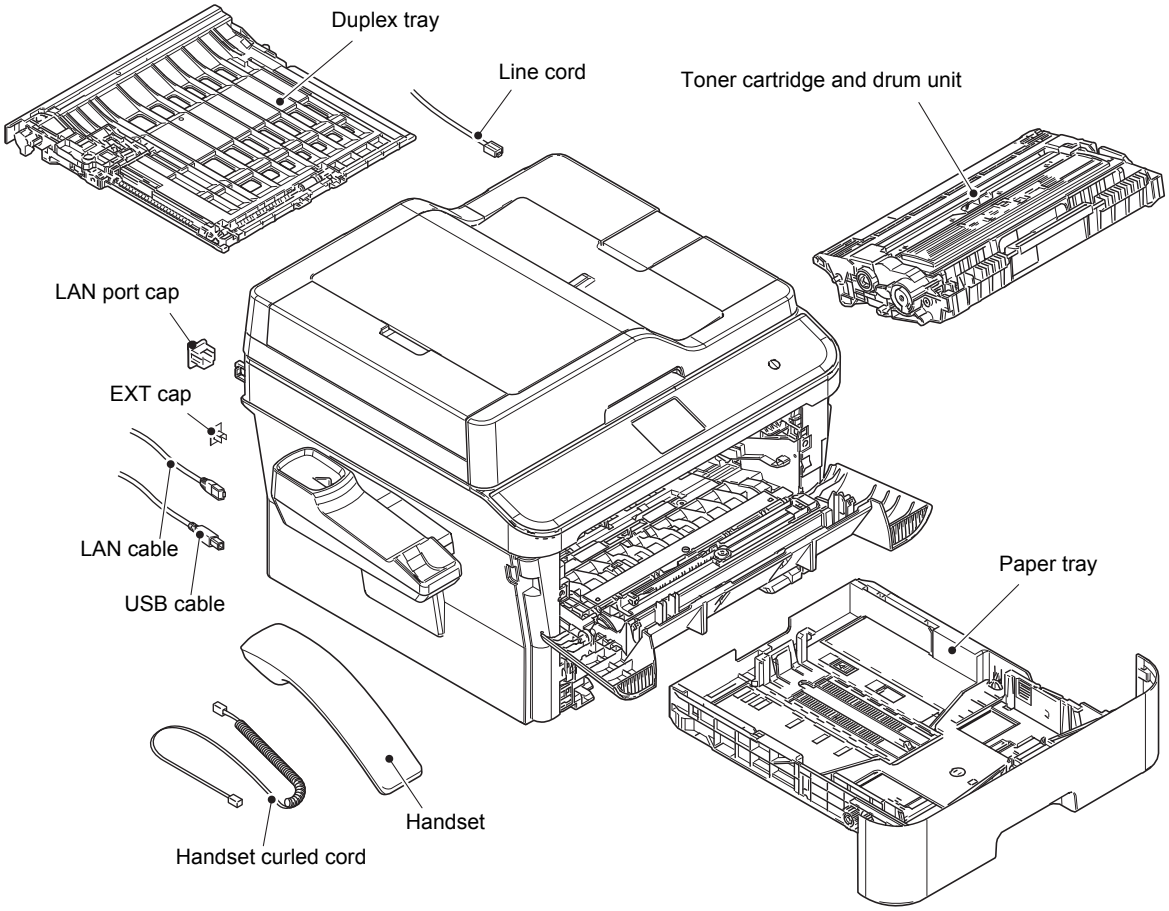

Fig. 3-9

9.2 Cord Hook

(1) Remove the taptite cup B M3x8 screw to remove the cord hook. (two locations)

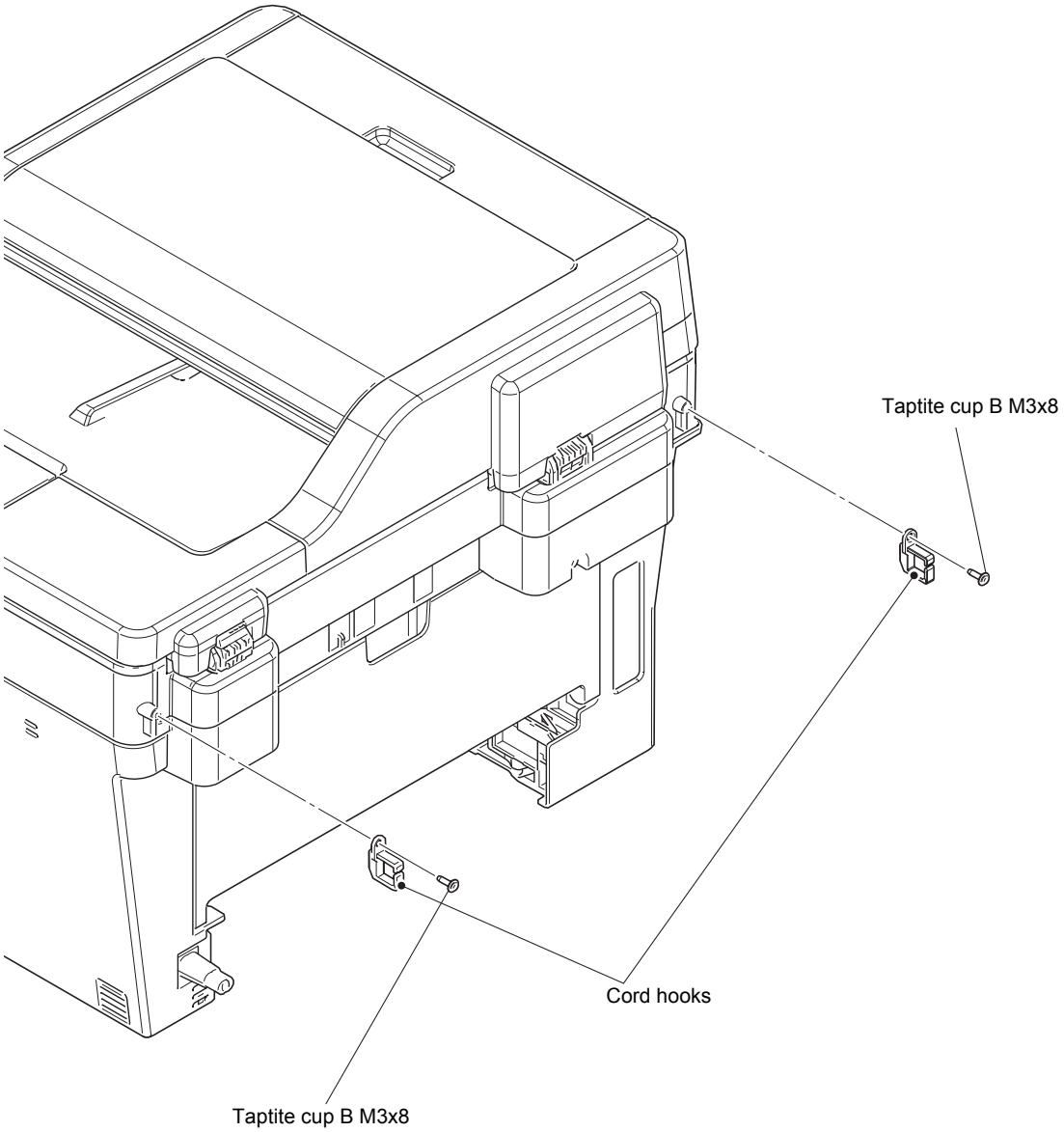

Fig. 3-10

Confidential

9.3 Back Cover

(1) Open the back cover.

(2) Push both ribs on the back cover outward, and remove the pins on the outer chute ASSY.

(3) Pull out the right side of the back cover in the direction of the arrow A to remove it from the boss, and remove the back cover in the direction of the arrow B.

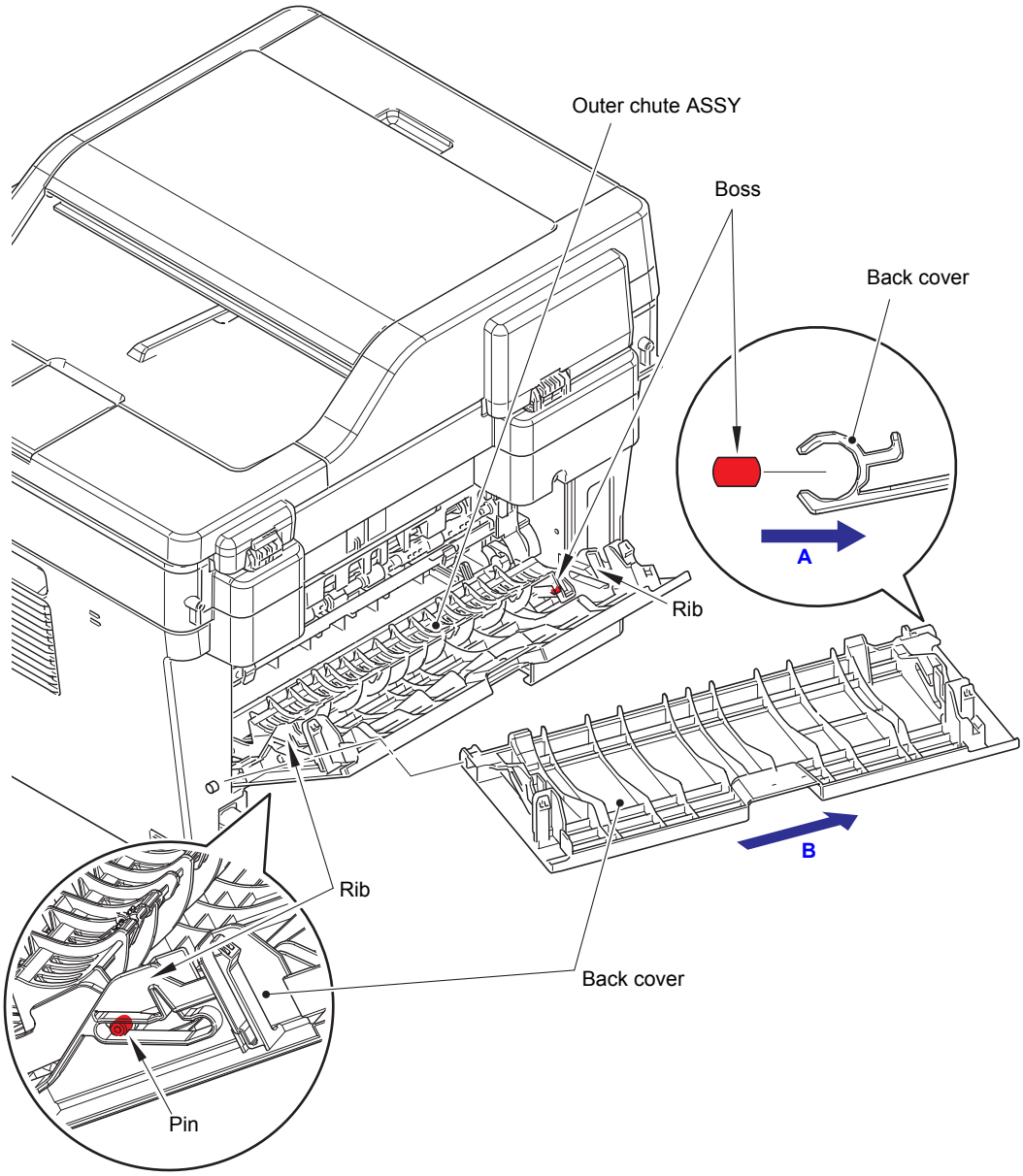

Fig. 3-11

9.4 Outer Chute ASSY

(1) Pull out the right side of the outer chute ASSY in the direction of the arrow A to remove the boss of the outer chute ASSY, and remove the outer chute ASSY in the direction of the arrow B.

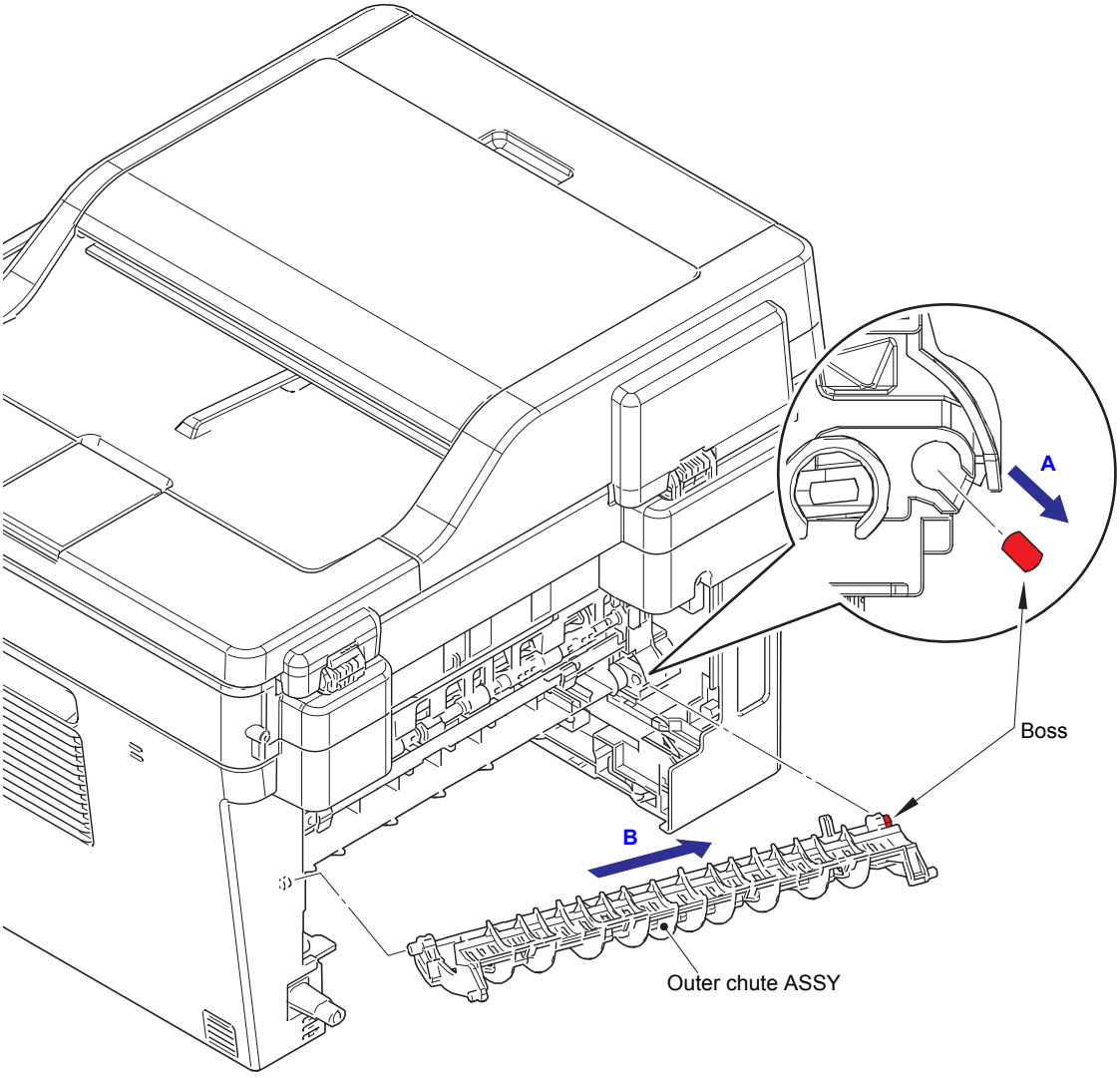

Fig. 3-12

Confidential

9.5 Front Cover ASSY, Support Flap

(1) Open the front cover ASSY.

(2) Release the hook of the develop joint link, and remove the develop joint link from the front cover ASSY.

(3) Lift the rib on the front chute ASSY, and slide the front cover ASSY in the direction of the arrow A to remove it.

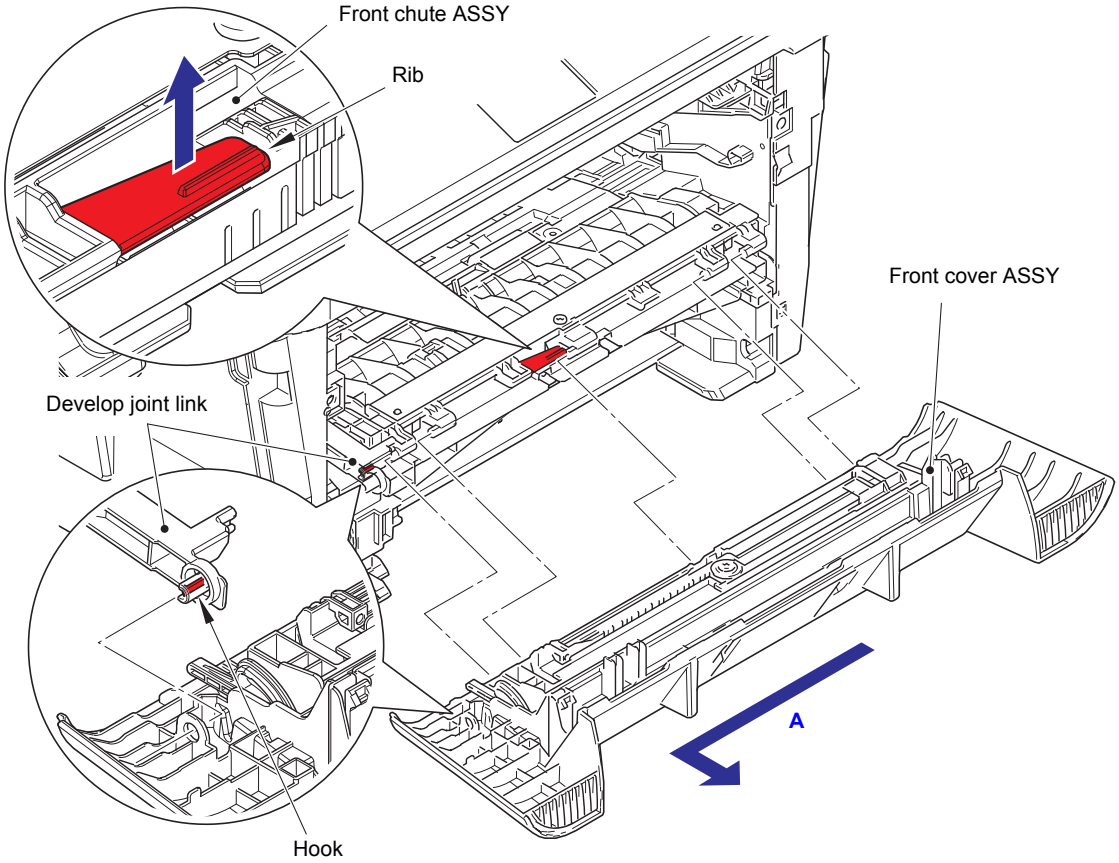

Fig. 3-13

(4) Remove the support flap from the front cover ASSY.

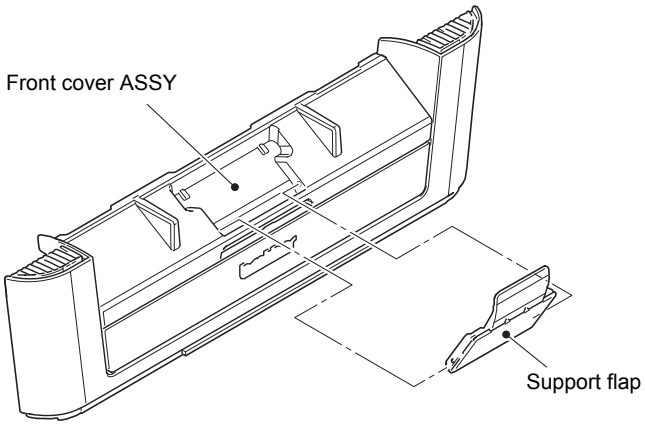

Fig. 3-14

9.6 Side Cover R

(1) Remove the taptite bind B M4x12 screw.

(2) Release the each hook on the side cover R in order of the arrow A to C, and remove the side cover R from the main body.

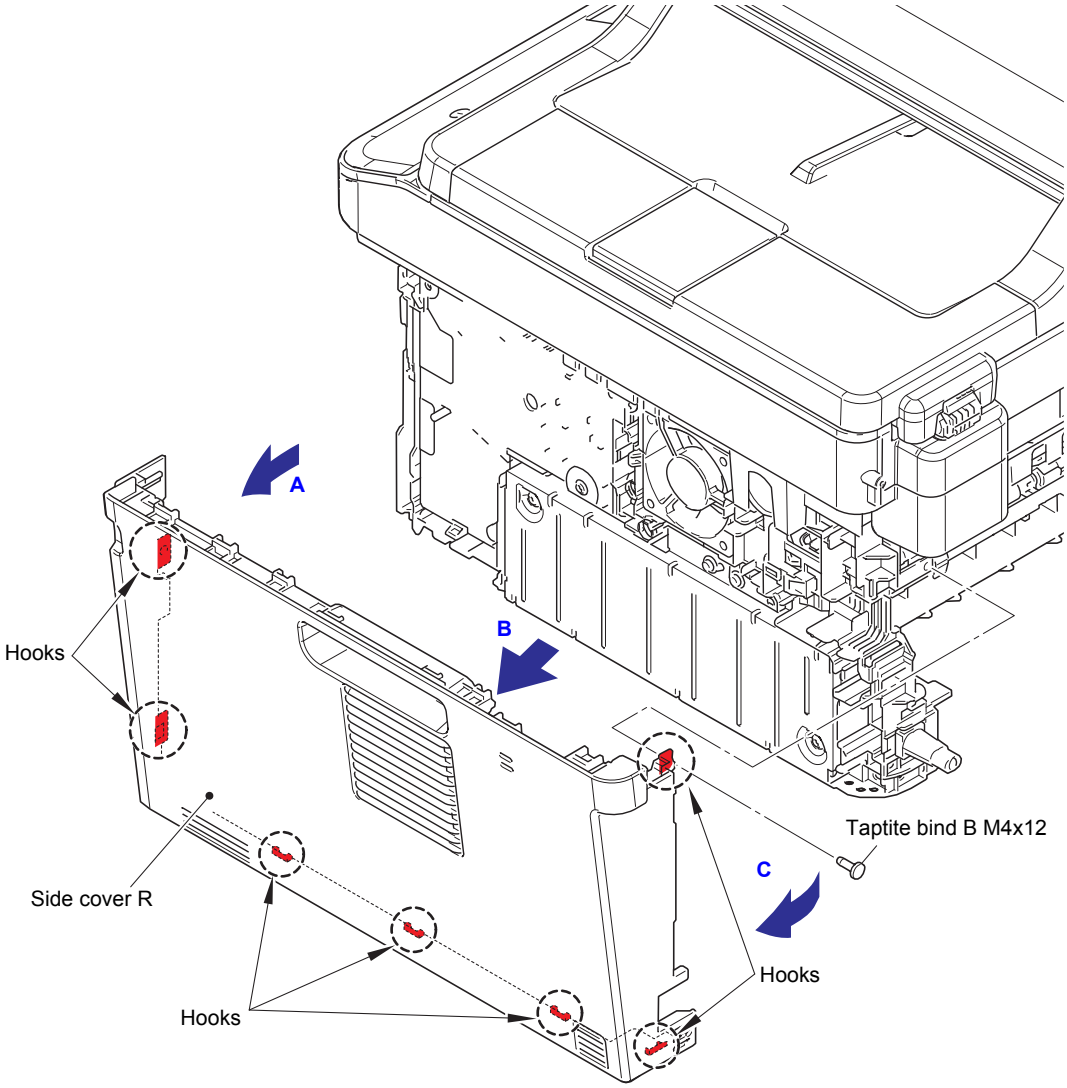

Fig. 3-15

9.7 Fuser Cover

(1) Hold the knobs on the fuser cover, and pull the fuser cover down.

(2) Pull the fuser cover in the direction of the arrow to remove it from the bosses, and remove the fuser cover.

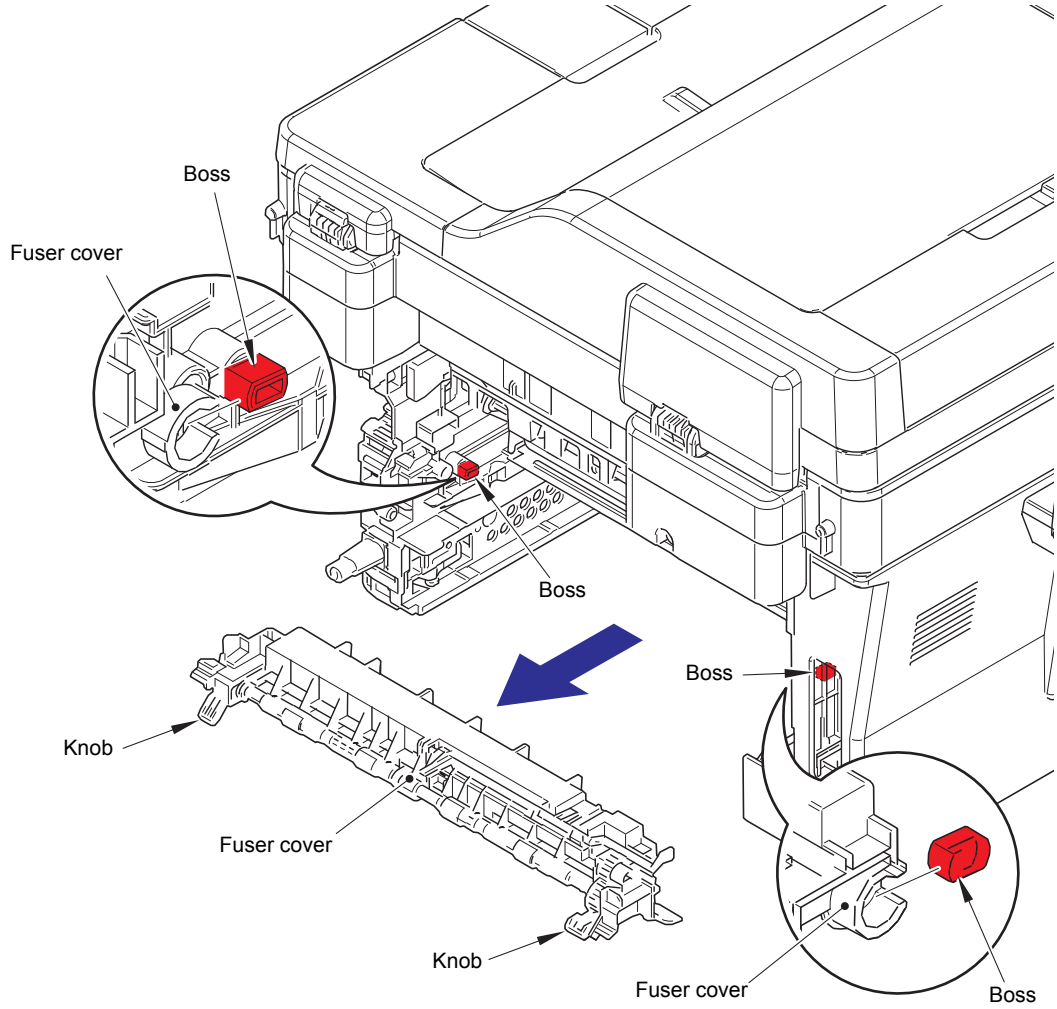

Fig. 3-16

9.8 Inner Chute ASSY

(1) Pull down the green envelope levers on both sides of the fuser unit.

(2) Remove the two taptite bind B M4x12 screws, and remove the inner chute ASSY.

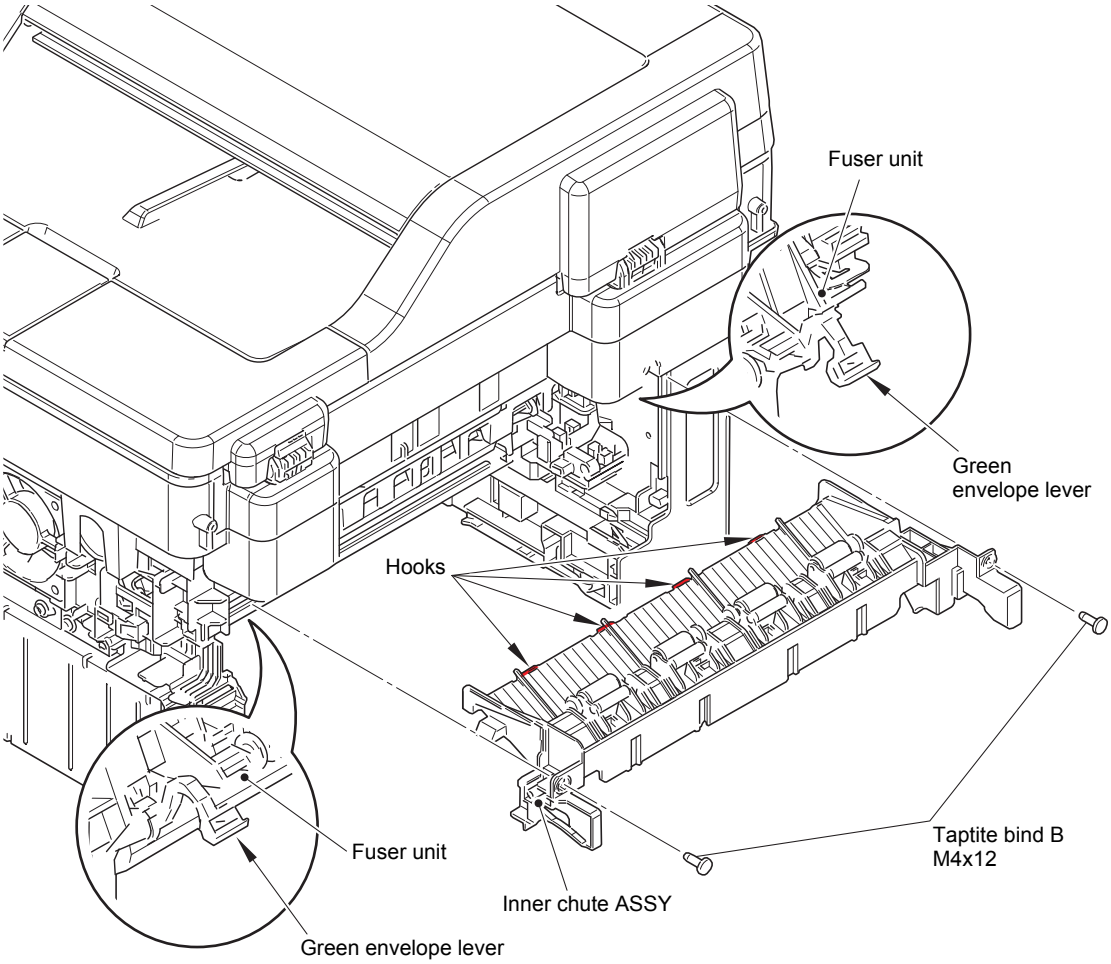

Fig. 3-17

Assembling Note:

- When attaching the inner chute ASSY, engage the hooks on the inner chute ASSY with the positioning holes on the joint cover ASSY.
- After assembling the inner chute ASSY, pull up the green envelope levers on both sides of the fuser unit.

9.9 Side Cover L, Handset Holder ASSY (For models with handset)

(1) Remove the taptite bind B M4x12 screw.

(2) Release the each hook on the side cover L in order of the arrow A to C, and remove the side cover L from the main body.

(3) Disconnect the hook harness from the main PCB ASSY. (For models with handset)

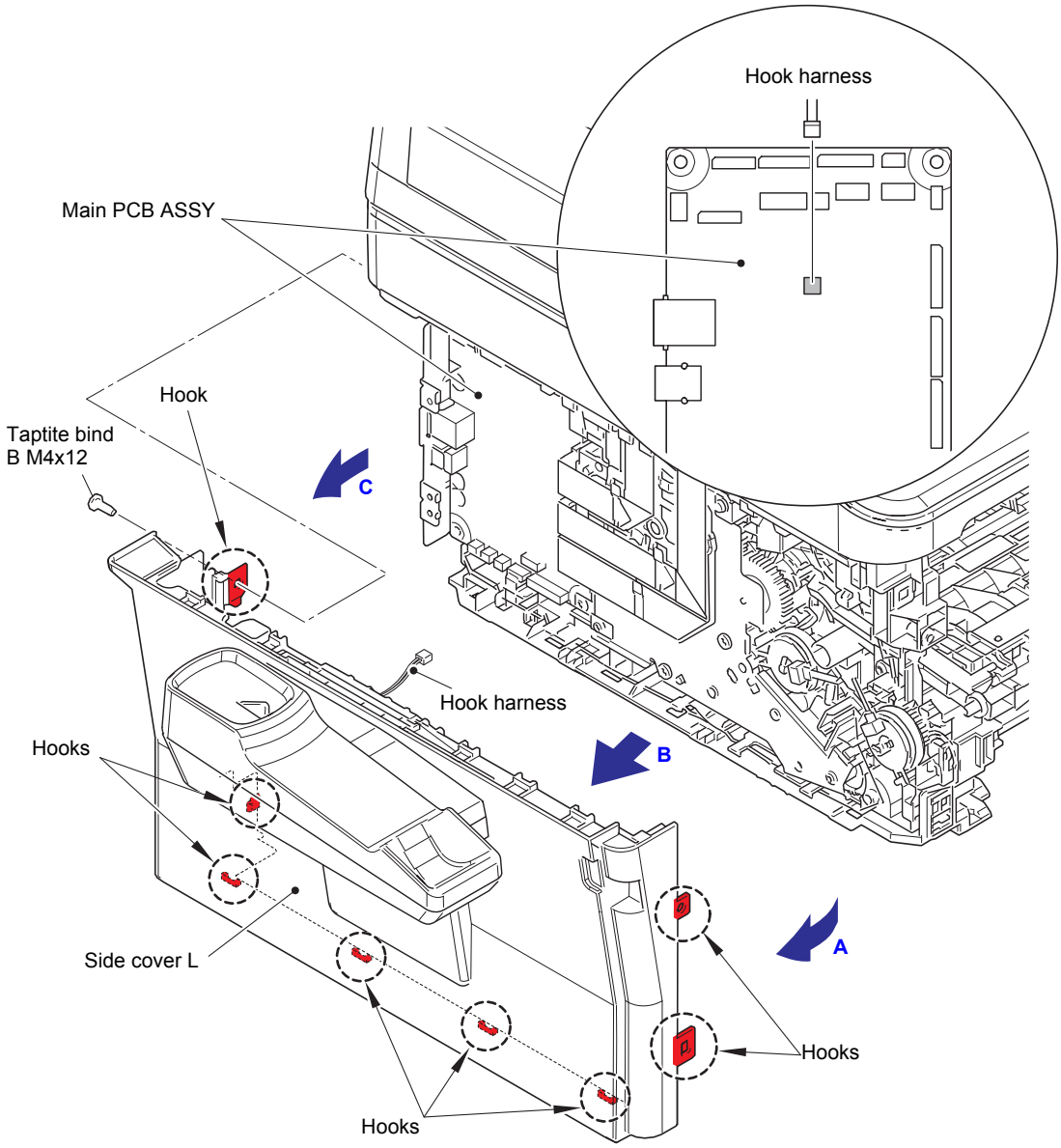

Fig. 3-18

Harness routing: Refer to "3. Left side of the machine".

<For models with handset>

(4) Remove the two taptite bind B M4x12 screws. Release the hooks to remove the handset holder ASSY from the side cover L.

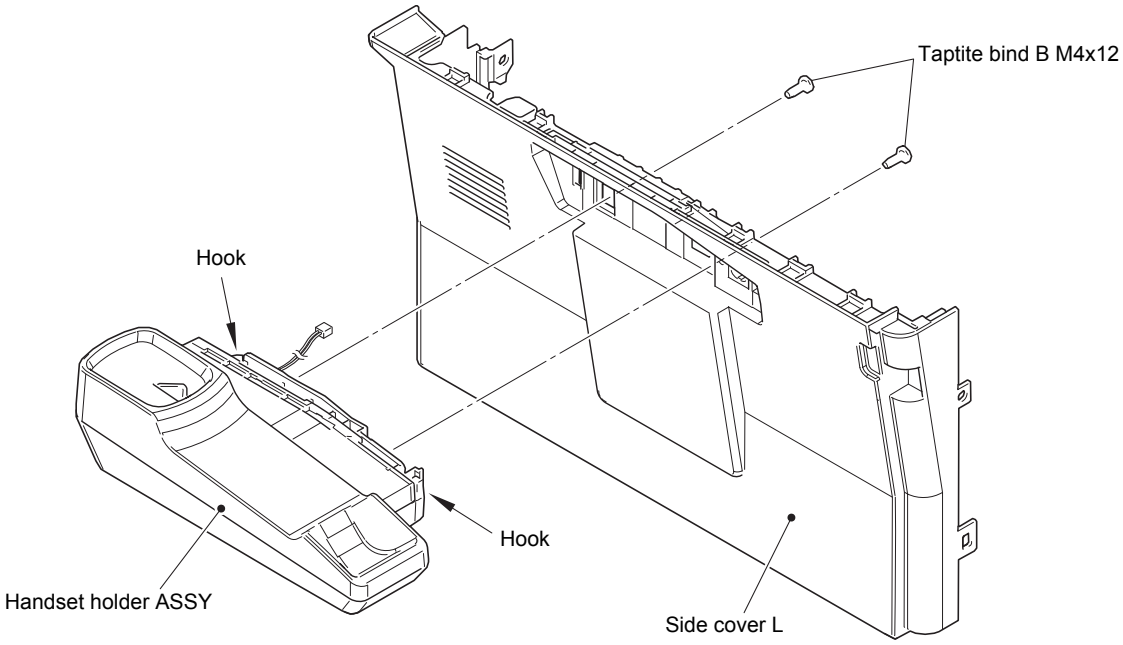

Fig. 3-19

Harness routing: Refer to "11. Hook switch PCB ASSY".

(5) Remove the taptite cup B M3x8 screw. Release the hooks A to remove the upper handset holder from the lower handset holder.

(6) Release the hook harness from the securing fixtures. Release the hook B to remove the hook switch PCB ASSY from the lower handset holder.

(7) Remove the actuator hook from the hook switch PCB ASSY.

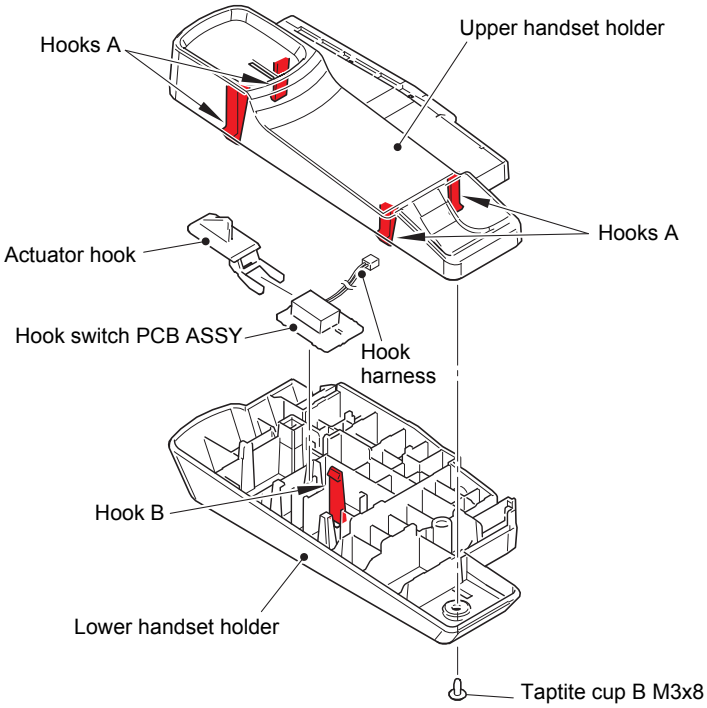

Fig. 3-20

Harness routing: Refer to "11. Hook switch PCB ASSY".

9.10 Pull Arm L, Pull Arm R, Pull Arm Spring

(1) Open the document scanner unit.

(2) Release the joint parts of pull arm L and pull arm R from the each pull arm hinge.

(3) Remove the pull arm L and the pull arm R from the each pull arm guide.

(4) Remove the each pull arm spring from the pull arm L and the pull arm R.

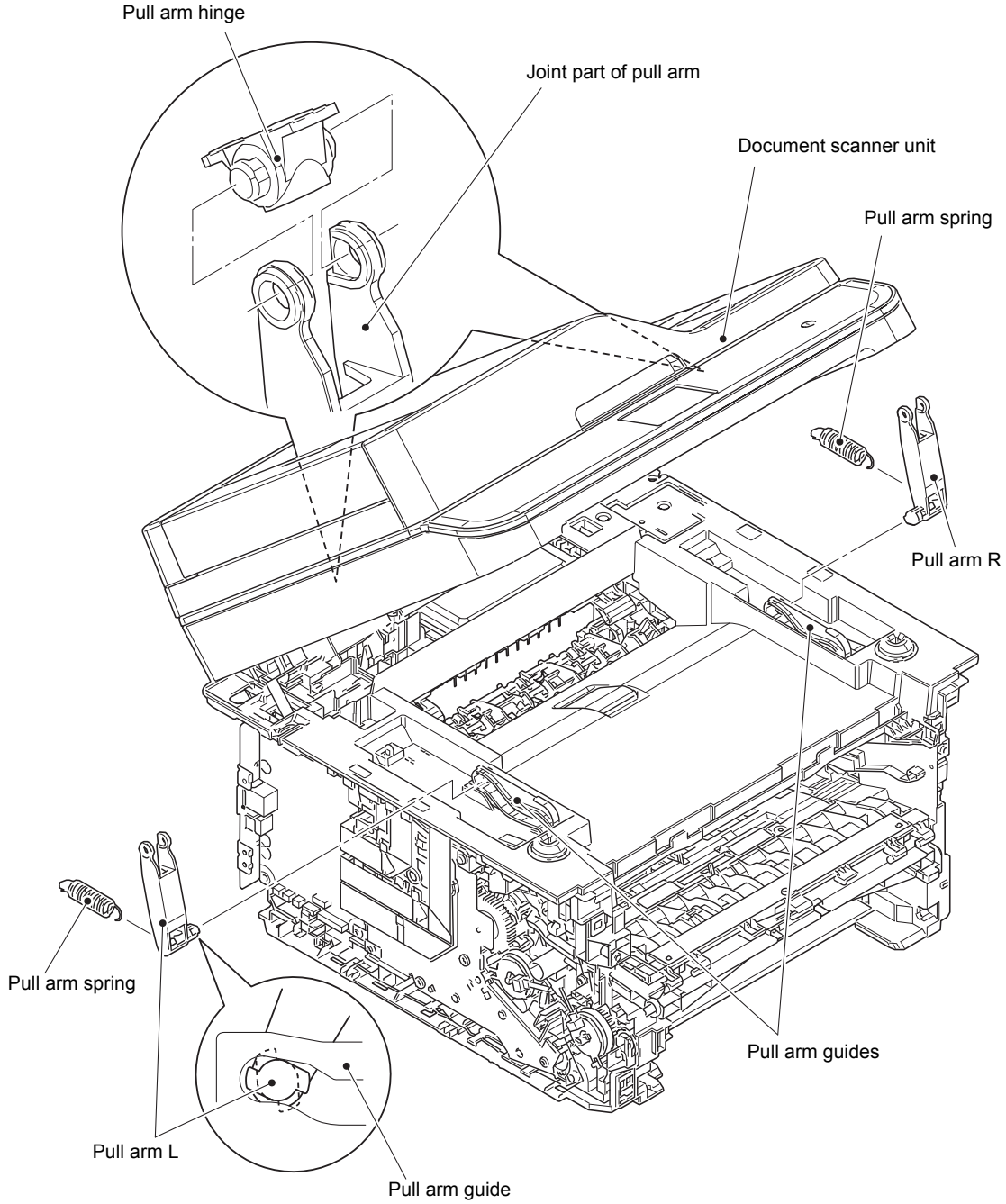

Fig. 3-21

Confidential

9.11 Document Scanner Unit

(1) Remove the taptite cup S M3x8 SR screw to remove the document scanner FG harness.

(2) Remove the taptite cup S M3x8 SR screw to remove the panel FG harness and the ADF FG harness.

(3) Disconnect the second side document scanning position sensor PCB harness, the ADF sensor harness, the panel harness, the document scanner motor harness, the ADF motor harness, the first side CIS flat cable and the second side CIS flat cable from the main PCB ASSY.

Note:

- After disconnecting flat cables, check that each cable is not damaged at its end or short-circuited.
- When connecting flat cables, do not insert them at an angle. After insertion, check that the cables are not at an angle.

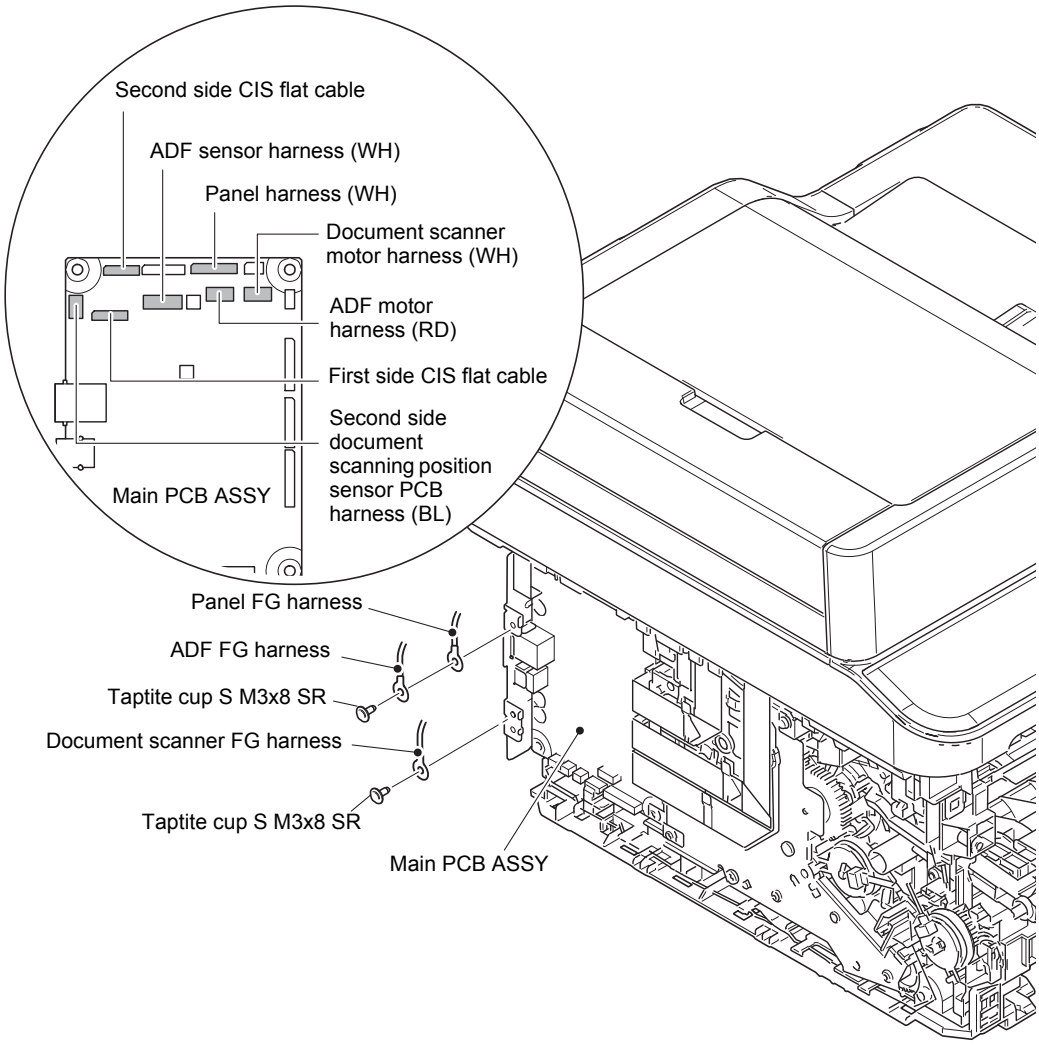

Fig. 3-22

Harness routing: Refer to "12. ADF unit - Main PCB ASSY", "13. Document scanner unit - Main PCB ASSY".

(4) Release the hook to remove the ADF FFC holder while opening the document scanner unit. Release the each harness from the securing fixtures.

(5) Open the document scanner unit at 30 degrees, and remove it by lifting it up.

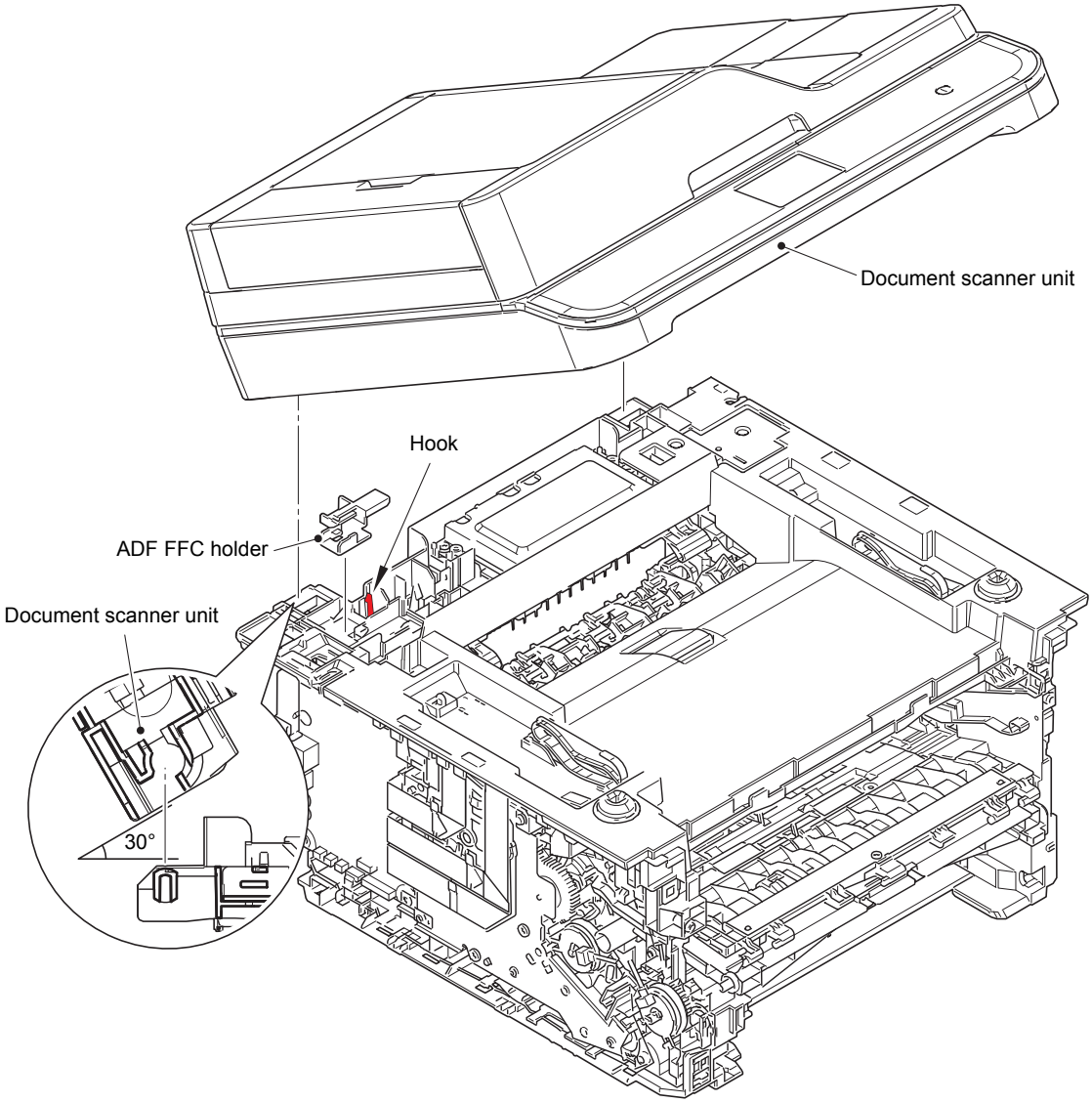

Fig. 3-23

Harness routing: Refer to "12. ADF unit - Main PCB ASSY", "13. Document scanner unit - Main PCB ASSY".

Assembling Note:

- If you replaced the document scanner unit, refer to "5. IF YOU REPLACE THE FIRST SIDE CIS UNIT OR DOCUMENT SCANNER UNIT" in Chapter 4 to configure settings.

9.12 ADF Unit (For models with ADF)

9.12.1 ADF Unit

(1) Remove the ADF FFC holder from the second side CIS flat cable.

(2) Remove the taptite bind B M4x12 screw from the hinge ASSY L.

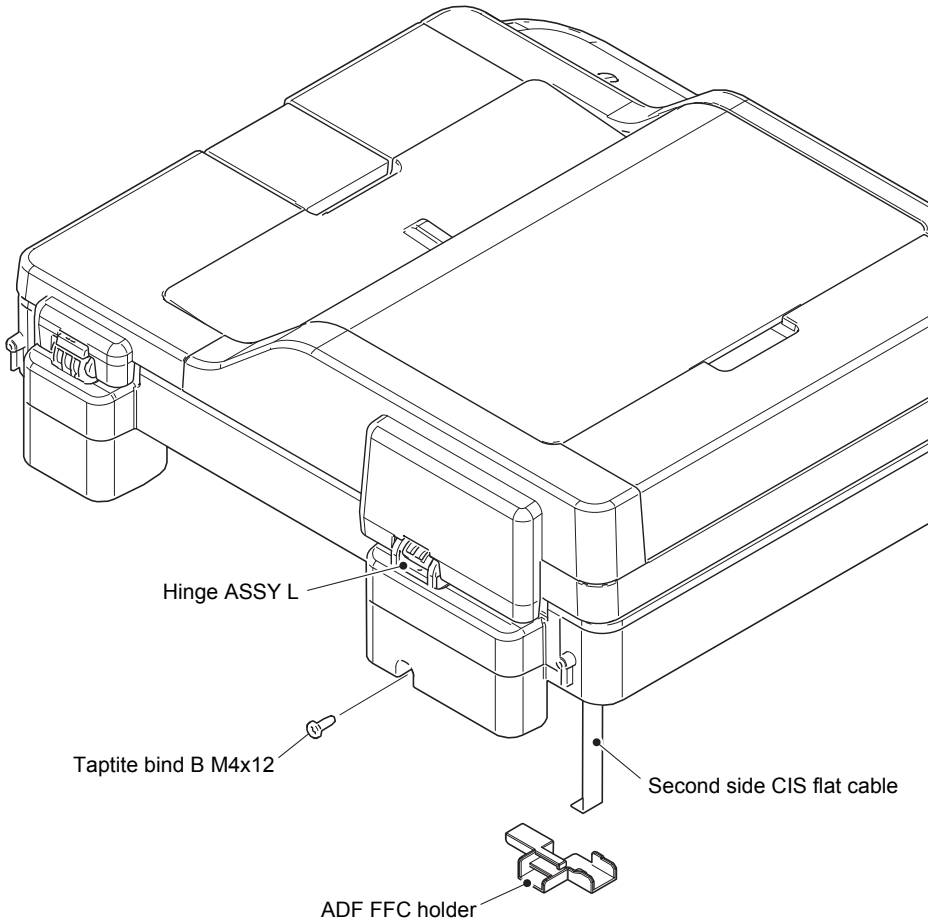

Fig. 3-24

Assembling Note:

- Attach the ADF FFC holder to the second side CIS flat cable as shown in the figure below.

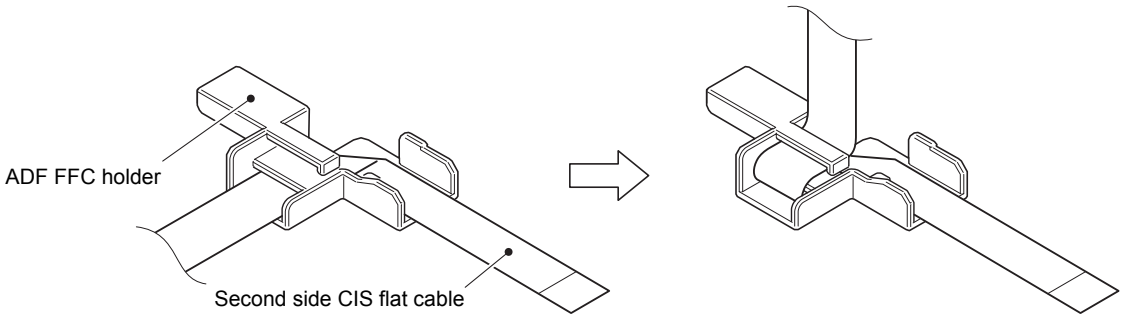

Fig. 3-25

(3) Open the ADF unit. Release the hook of the FFC holder ASSY, then slide it in the direction of the arrow to release the claws. Remove the FFC holder ASSY from the document scanner unit.

(4) Lift the ADF unit, and remove the ADF unit from the document scanner unit while pushing the hook of the hinge R. Pull out the second side CIS flat cable from the flat core, and pull out the ADF harness unit from the hole.

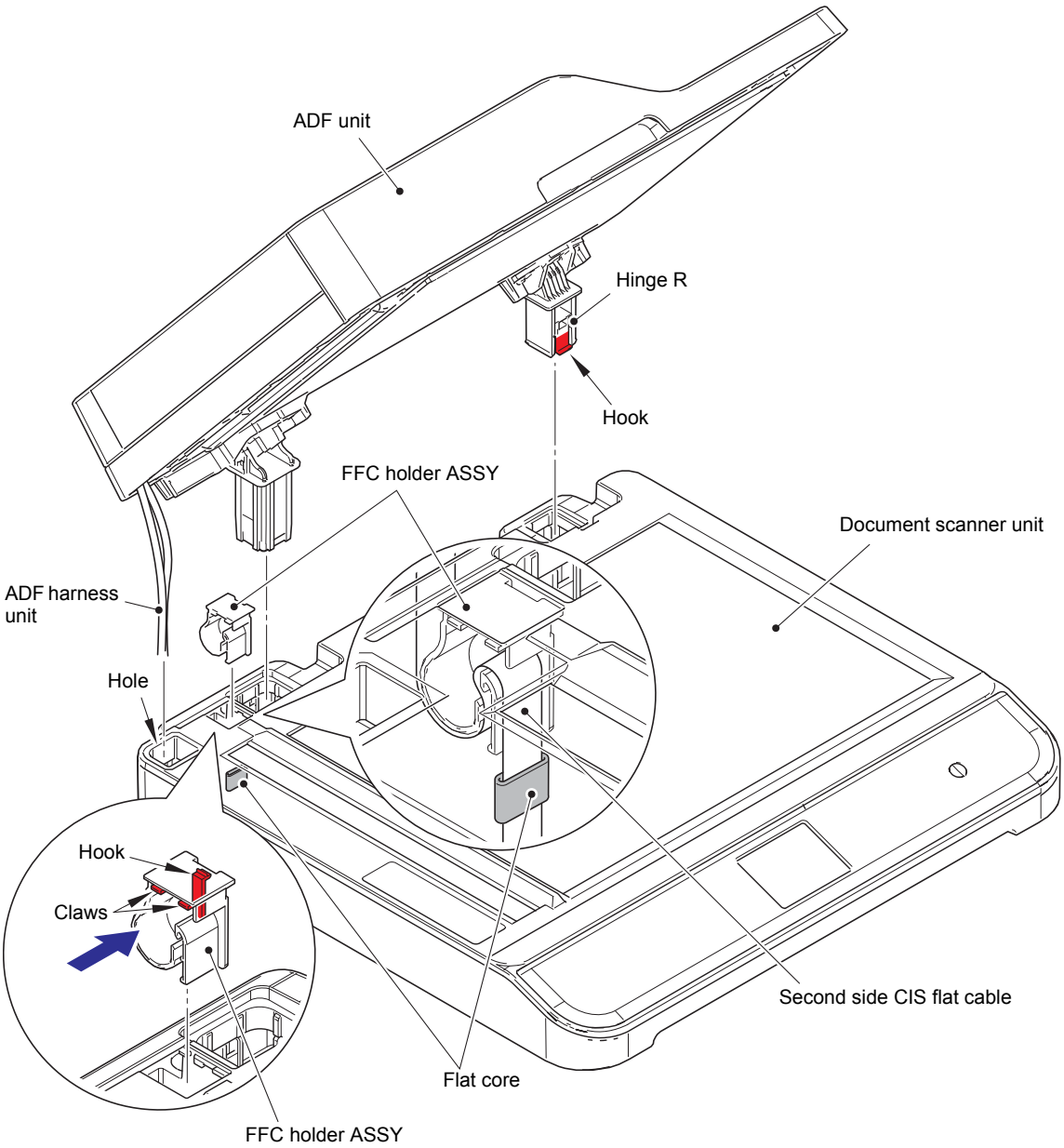

Fig. 3-26

Harness routing: Refer to "12. ADF unit - Main PCB ASSY".

Assembling Note:

- If you replaced the ADF unit, refer to "6. IF YOU REPLACE THE ADF UNIT OR SECOND SIDE CIS UNIT" in Chapter 4 to configure settings.

9.12.2 Hinge ASSY L, Hinge R, Hinge R Support, Hinge Arm R

(1) Remove the three taptite cup S M3x12 screws to remove the hinge ASSY L from the document scanner unit.

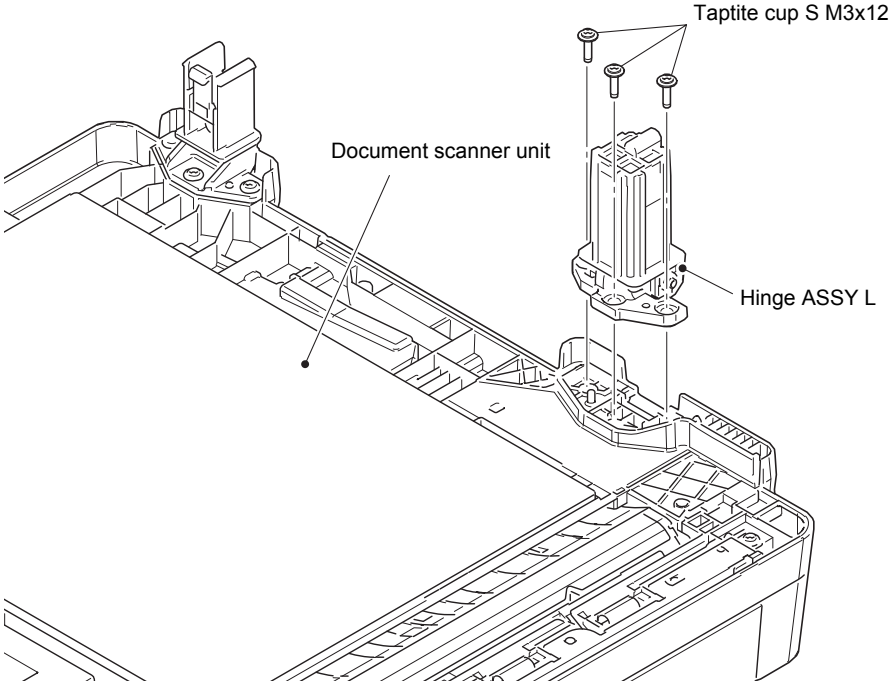

Fig. 3-27

(2) Remove the taptite cup B M3x10 screw to remove the hinge R support and the hinge R from the hinge arm R.

(3) Remove the three taptite cup B M3x10 screws to remove the hinge arm R from the document scanner unit.

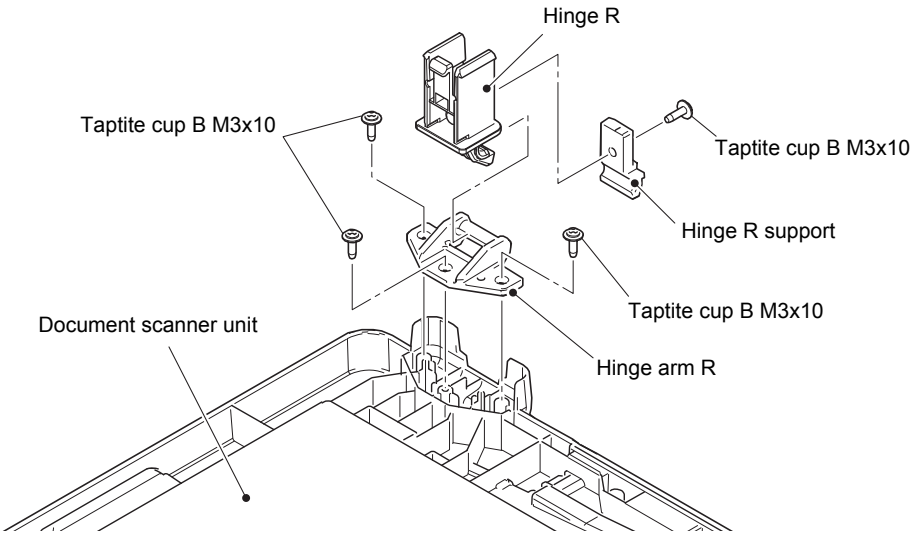

Fig. 3-28

9.12.3 ADF Document Output Support Flap, ADF Document Support

(1) Release the bosses to remove the ADF document output support flap from the ADF unit.

(2) Bend the ADF document support inward to remove it from the bosses of the ADF unit.

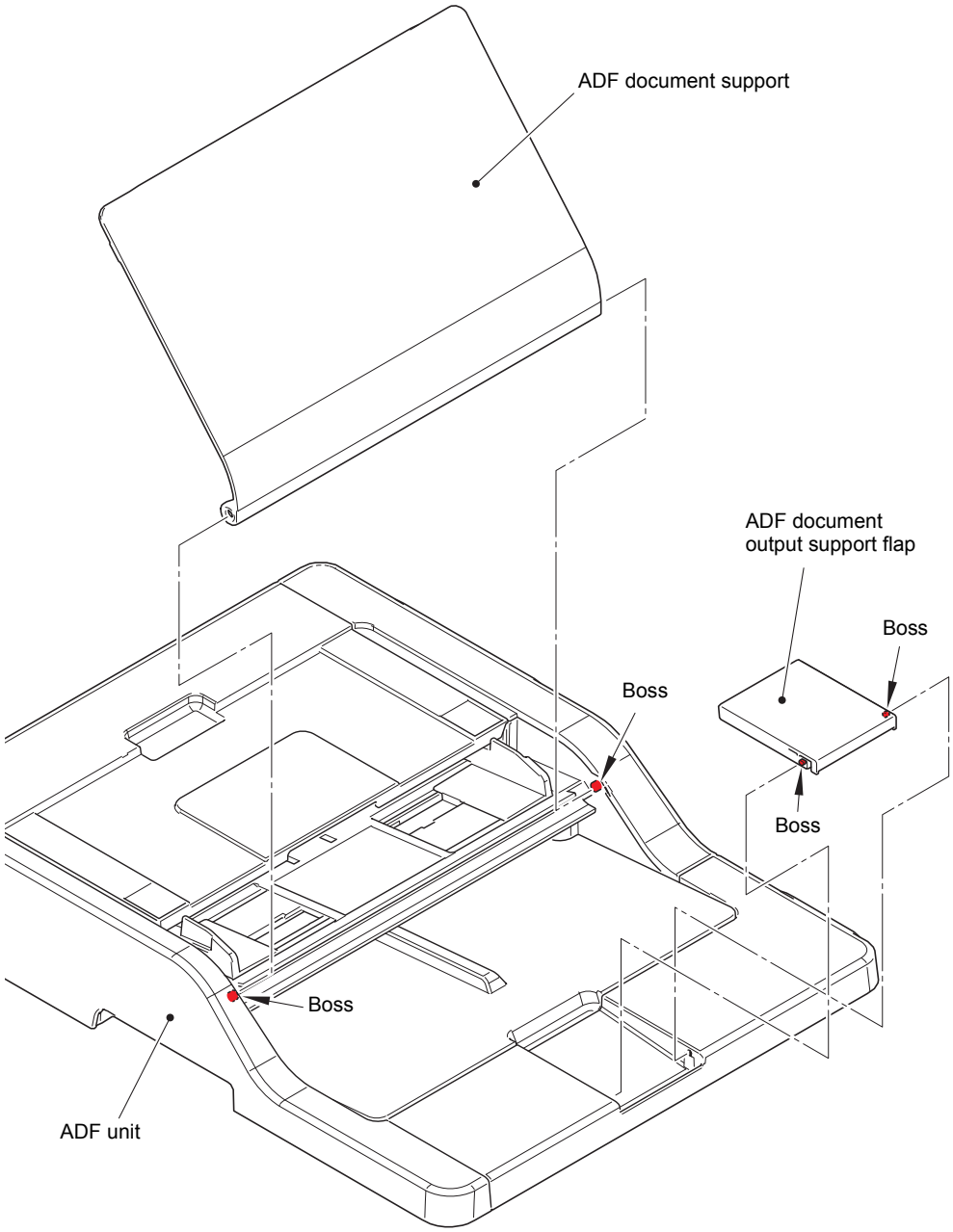

Fig. 3-29

9.12.4 ADF Cover ASSY, Gear Cover

(1) Open the ADF cover ASSY. Release the bosses to remove the ADF cover ASSY from the ADF unit.

(2) Release the hook to remove the gear cover from the ADF unit.

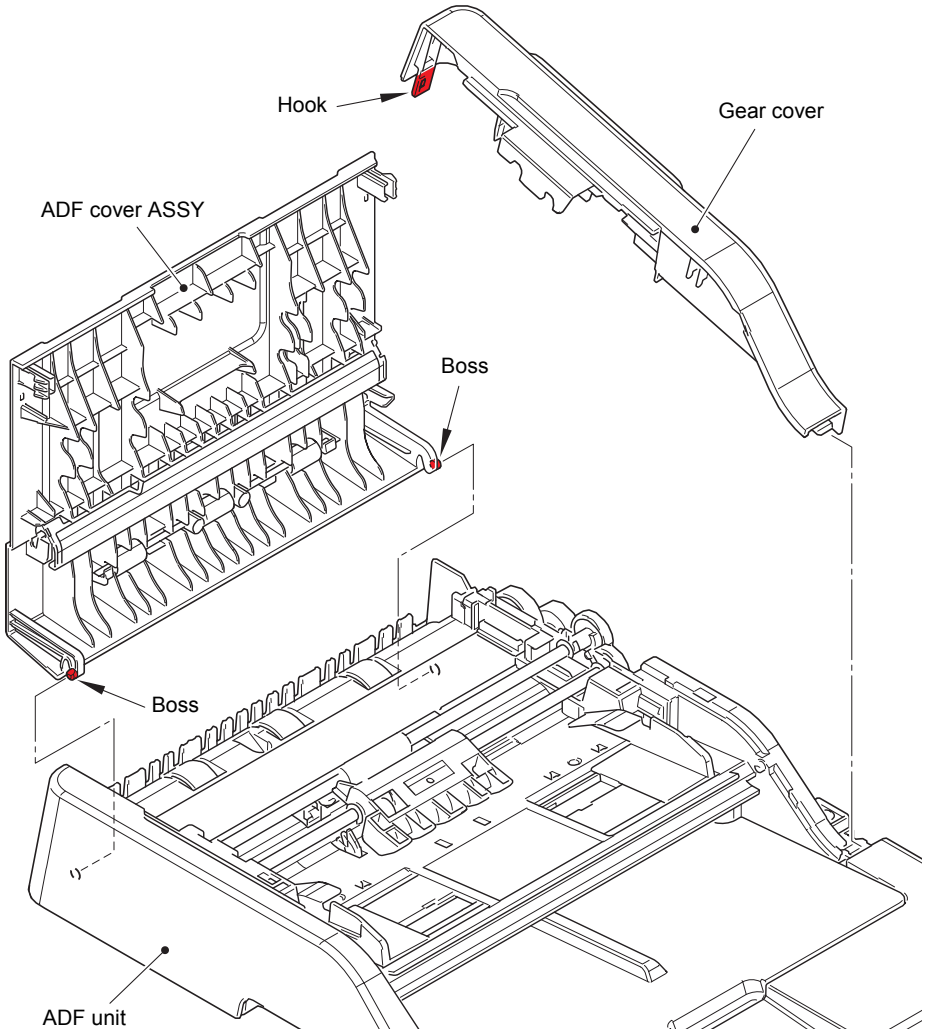

Fig. 3-30

9.12.5 Document Separate Roller ASSY

(1) Release the lock of the conductive bushing to remove the document separate roller ASSY from the ADF unit.

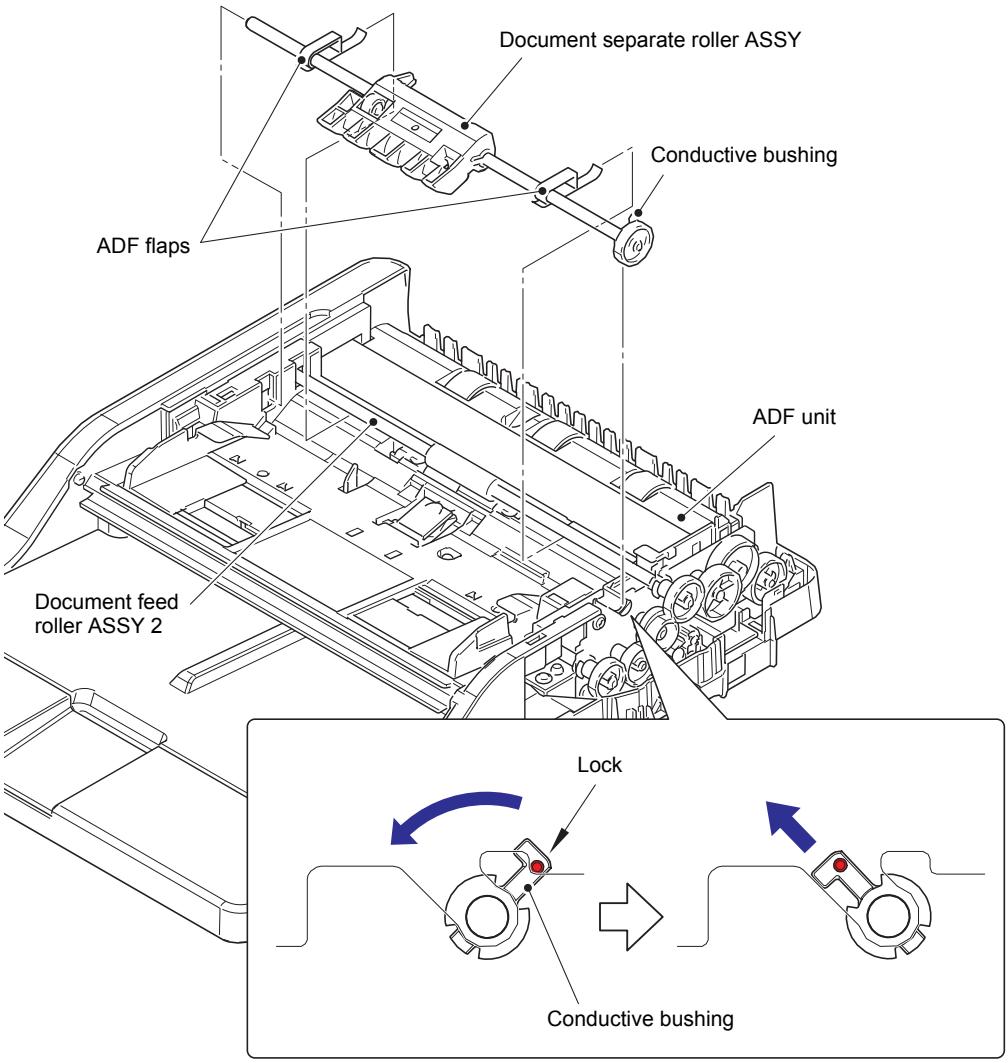

Fig. 3-31

Assembling Note:

- When attaching the document separate roller ASSY, make sure that the ADF flaps are set under the document feed roller ASSY 2. (Duplex scanning models only)

9.12.6 ADF Separation Pad Holder ASSY

(1) Release the bosses to remove the ADF separation pad holder ASSY from the ADF unit.

(2) Remove the ADF spring from the ADF unit.

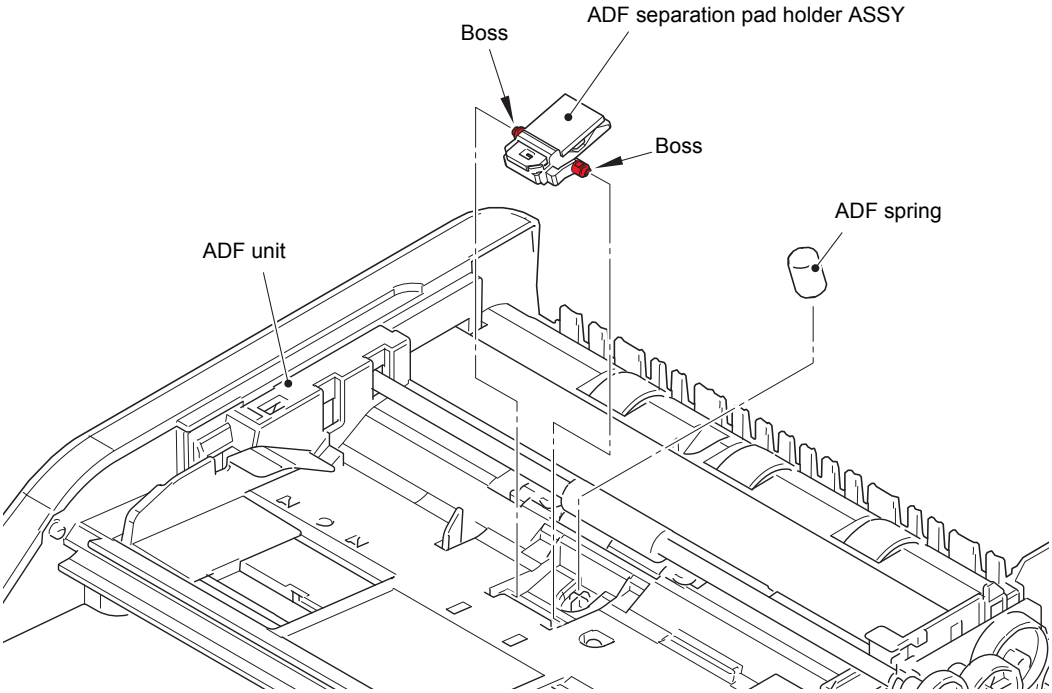

Fig. 3-32

Assembling Note:

- Noise may be caused if the end of the support film is on the upper document chute. Check that the end of the support film is positioned as shown in the figure below.

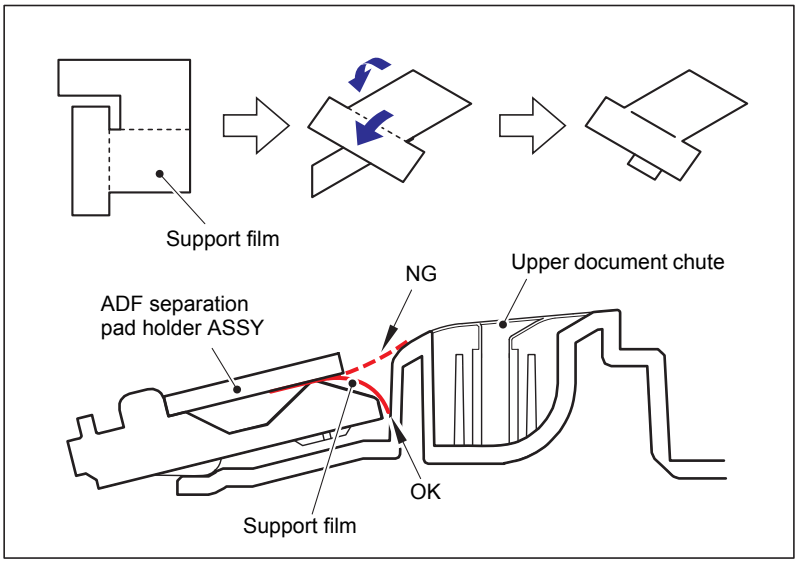

Fig. 3-33

Confidential

9.12.7 CIS Spacer, Second Side CIS Unit (Duplex scanning models only)

Note:
- Disassemble in a dust-free location.

(1) Release the hooks to remove the CIS glass stopper from the ADF unit.
(2) Remove the scanner glass strip from the ADF unit.

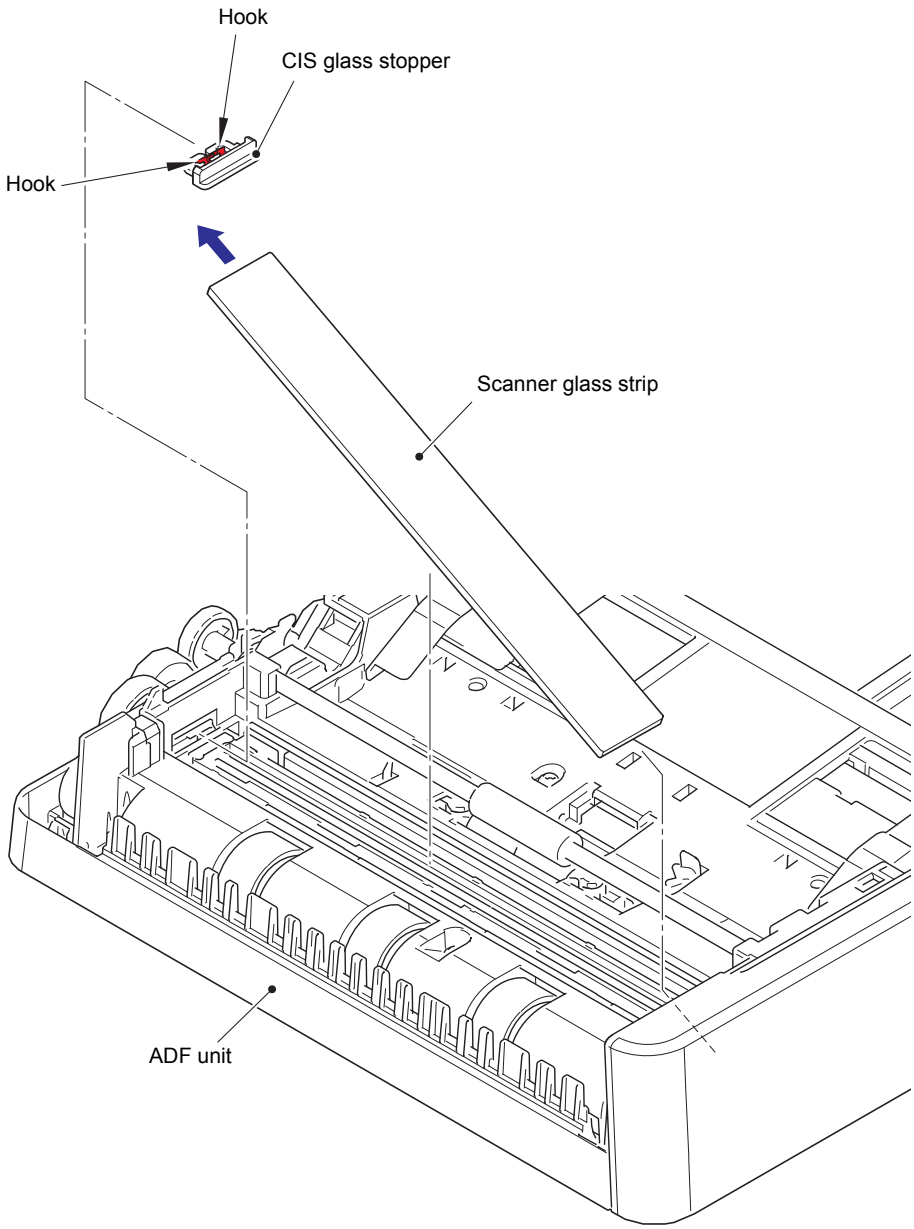

Fig. 3-34

(3) Remove the two CIS spacers from the second side CIS unit.

(4) Take off the second side CIS flat cable attached on the back of the ADF unit from the double-sided tape.

Note:

- Be sure to replace the double-sided tape with a new one, after taking off the second side CIS flat cable from the double-sided tape.

(5) Lift the second side CIS unit, and disconnect the second side CIS flat cable.

(6) Remove the two CIS springs from the ADF unit.

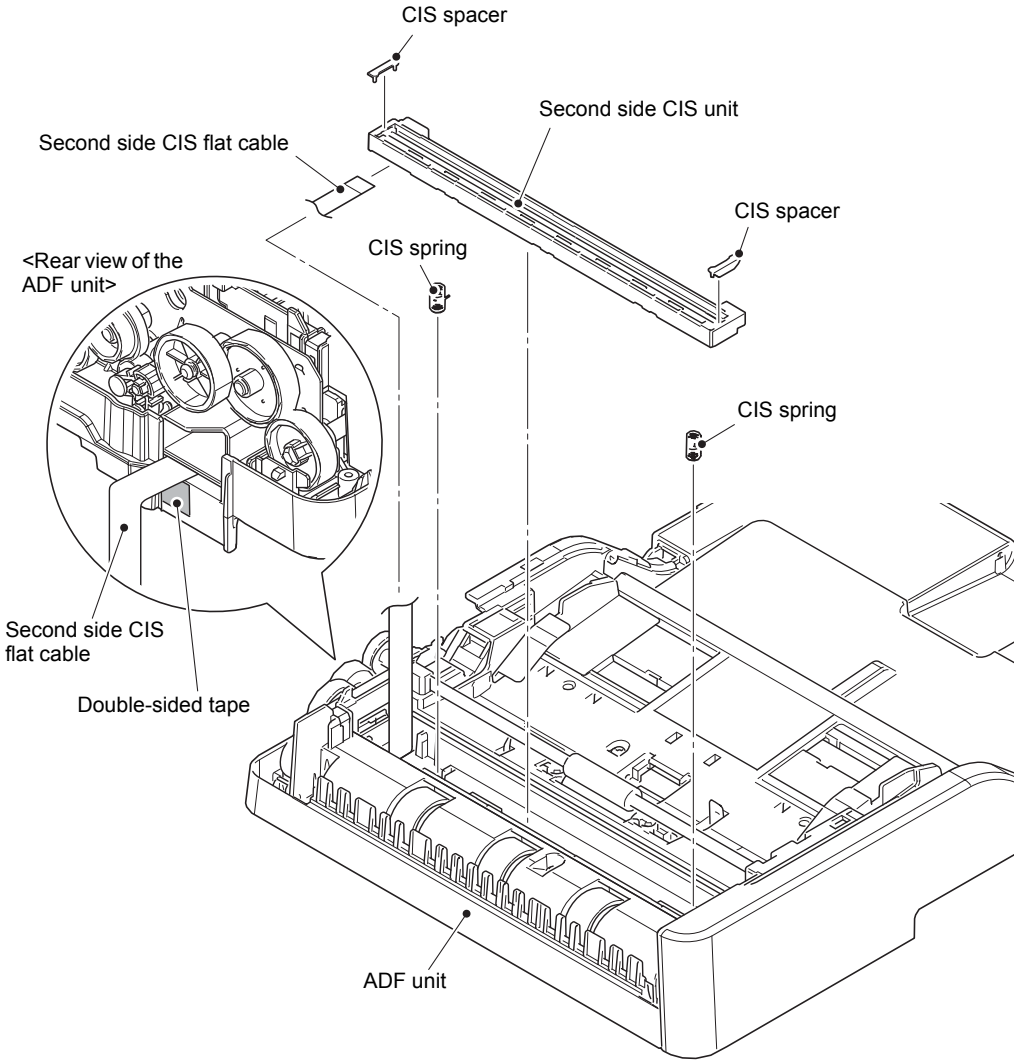

Fig. 3-35

9.12.8 Document Feed Roller ASSY 1

(1) Release the lock of the conductive bushing to remove the document feed roller ASSY 2.

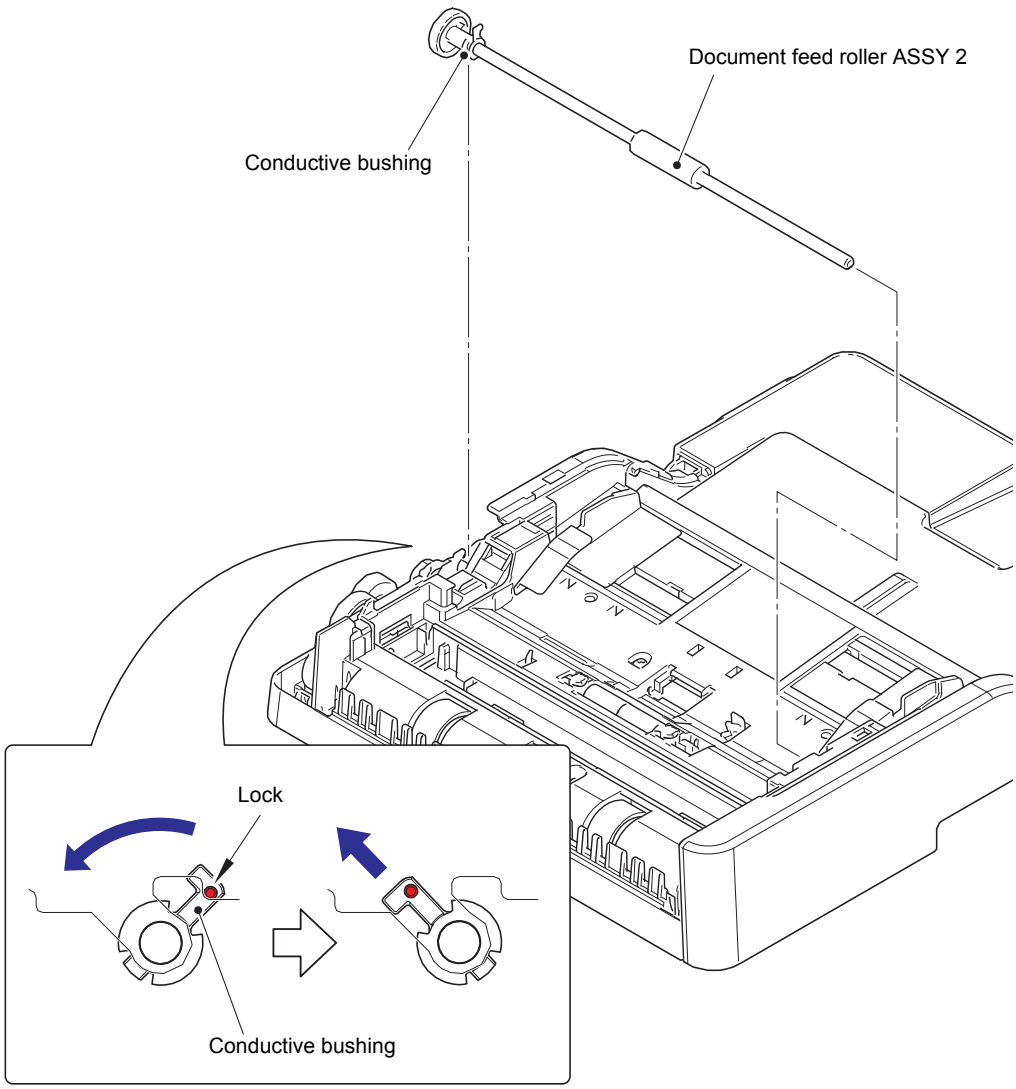

Fig. 3-36

(2) Remove the two taptite cup B M3x10 screws. Release the hooks to remove the ADF front cover from the ADF unit.

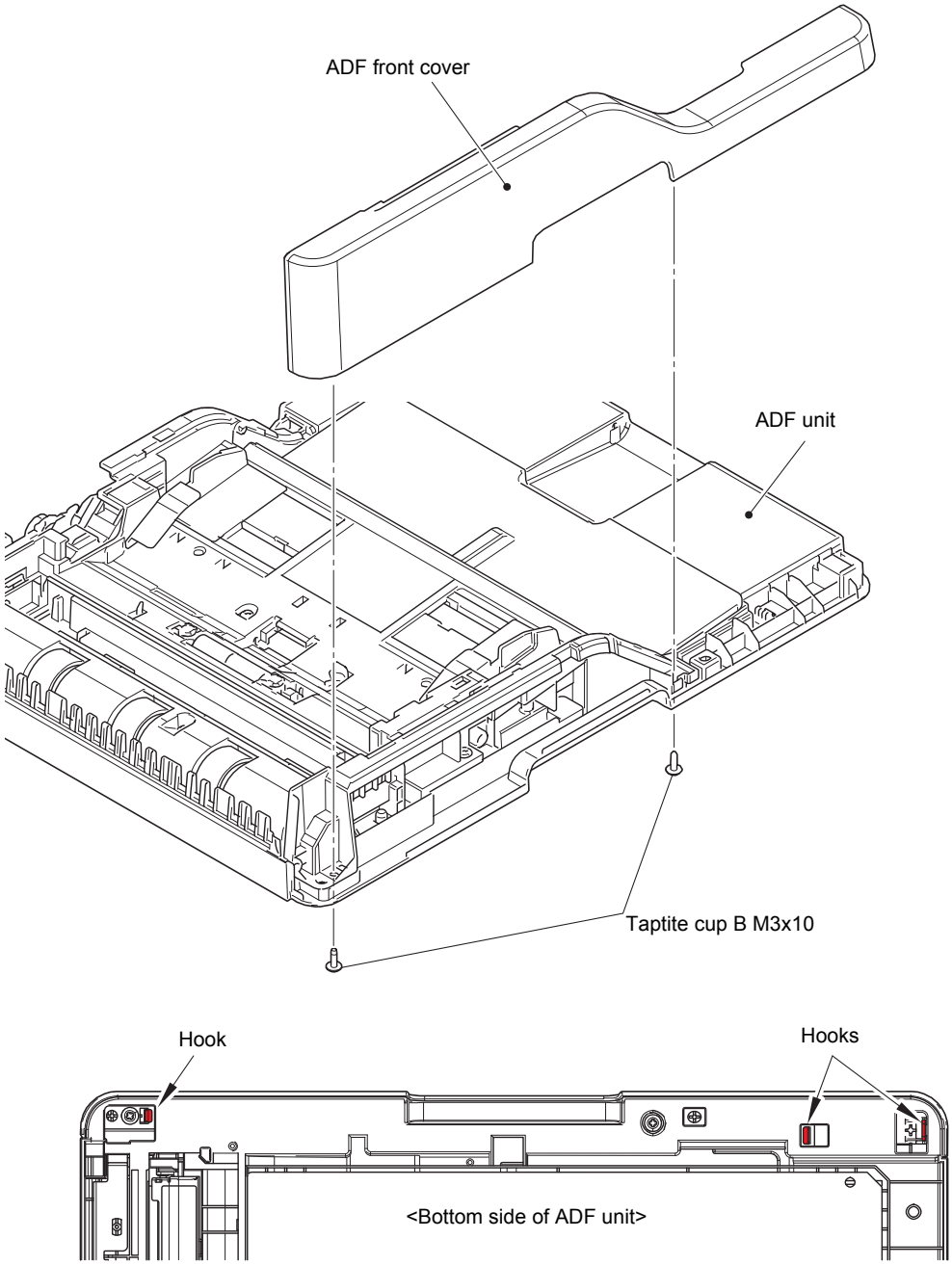

Fig. 3-37

(3) Remove the four taptite cup B M3x10 screws to remove the upper document chute ASSY from the ADF unit. Pull out the second side CIS flat cable from the hole.

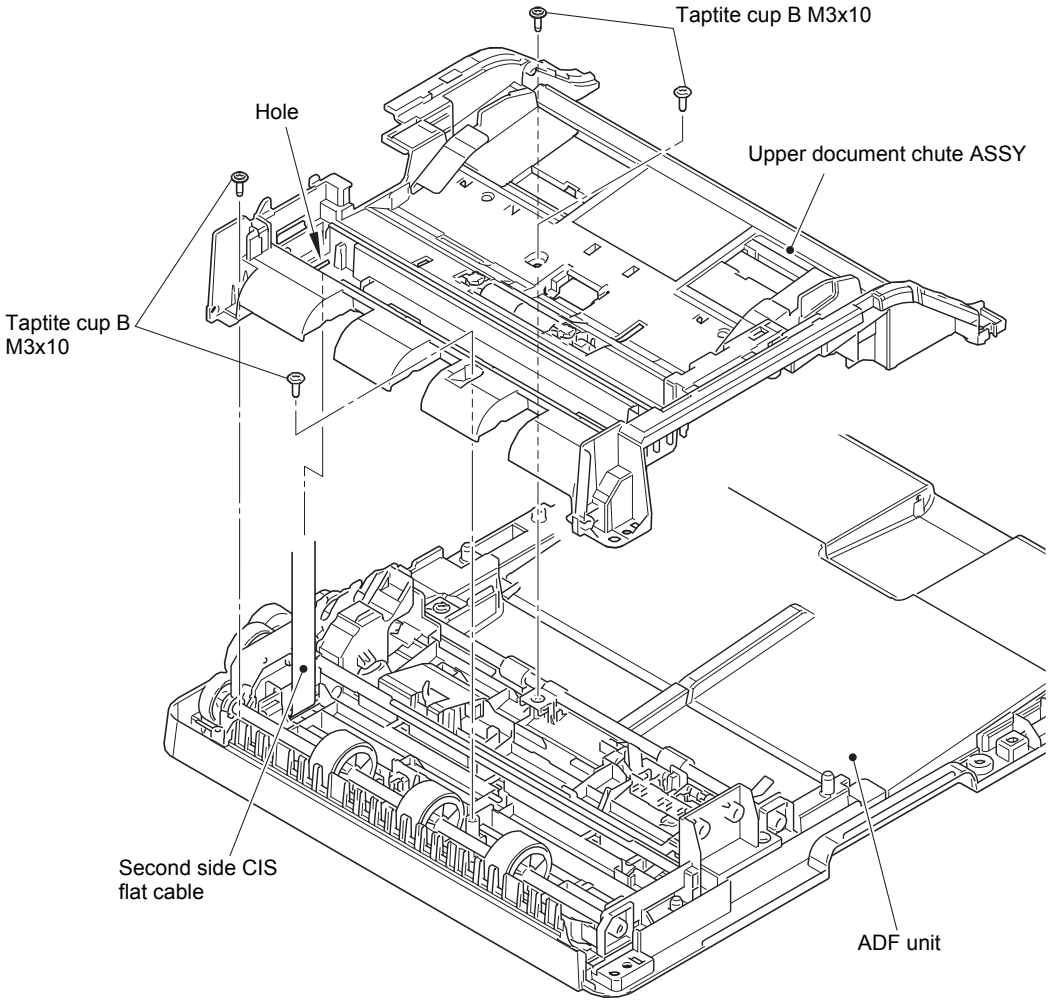

Fig. 3-38

(4) Release the lock of the conductive bushing to remove the document feed roller ASSY 1 from the ADF unit.

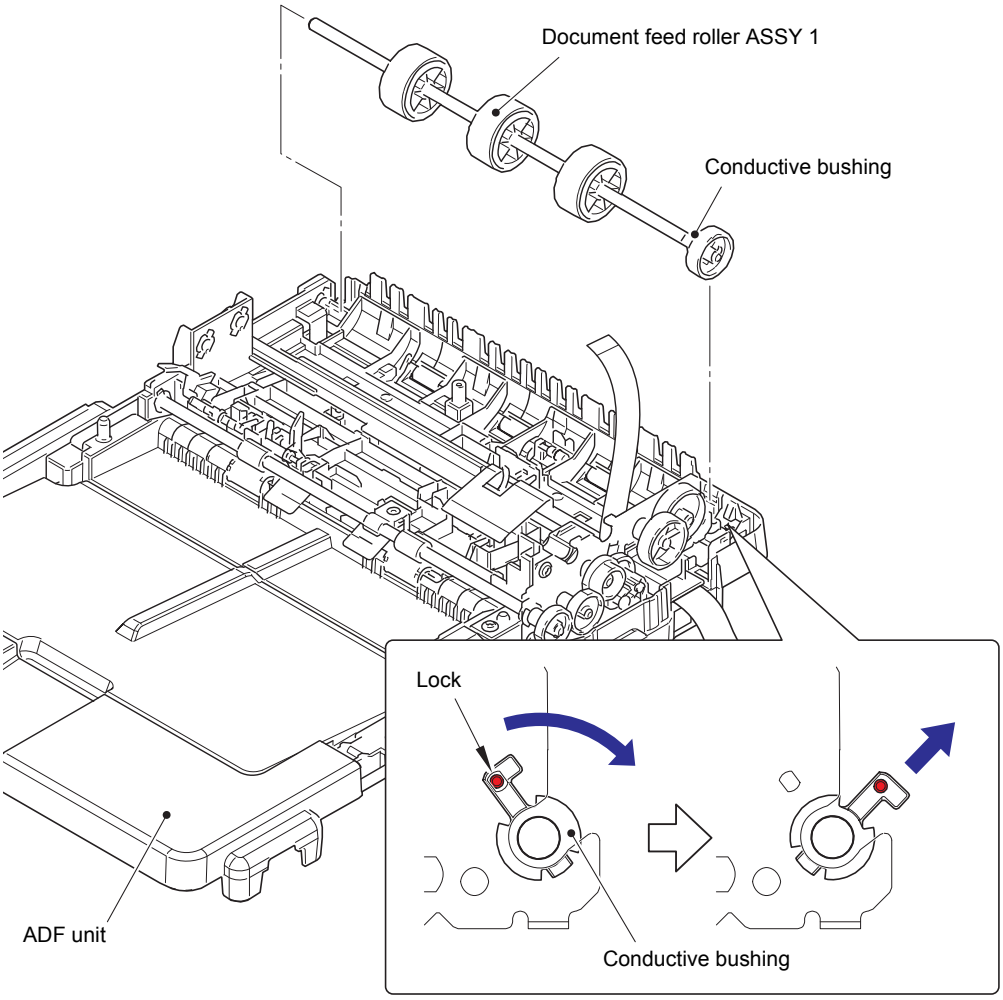

Fig. 3-39

9.12.9 FFC Holder ASSY, Second Side CIS Flat Cable, ADF Motor

(1) Release the ADF harness unit from the securing fixtures. Remove the three taptite cup B M3x10 screws. Release the hook to remove the lower document chute ASSY from the ADF unit.

(2) Remove the FFC holder ASSY from the second side CIS flat cable. Pull out the second side CIS flat cable from the hole of the lower document chute ASSY.

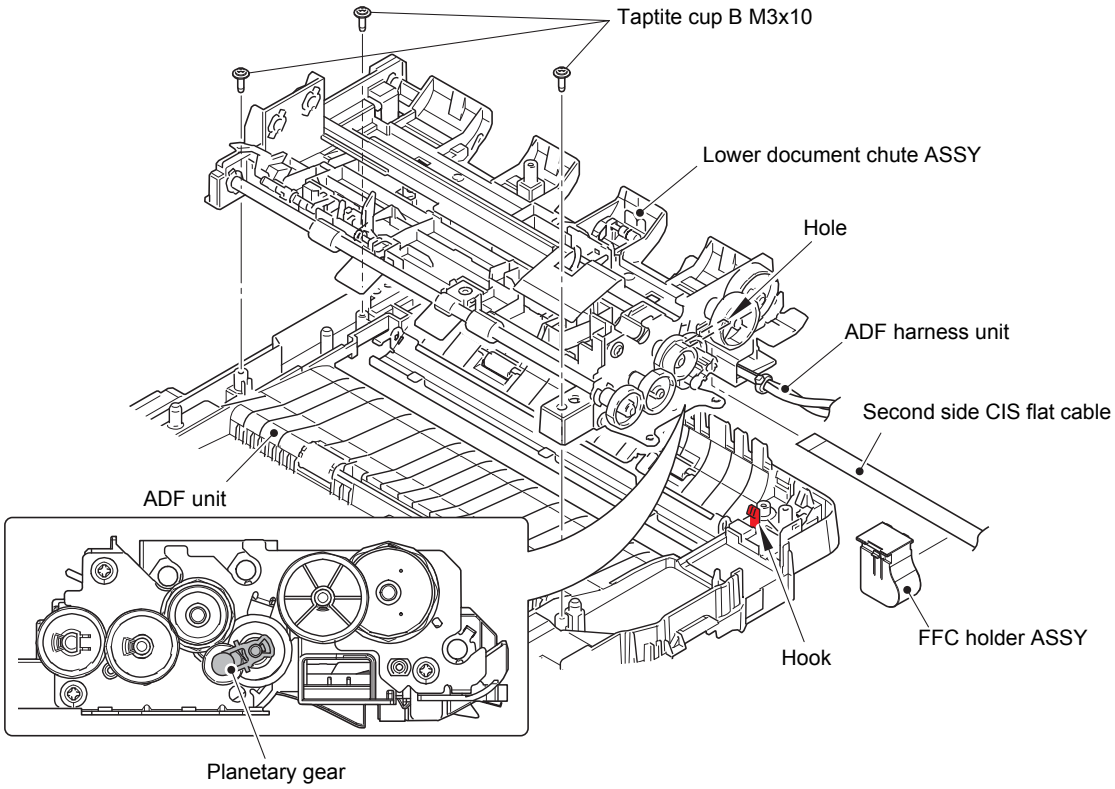

Fig. 3-40

Harness routing: Refer to "8. ADF unit".

Assembling Note:

- When attaching the lower document chute ASSY, make sure that the planetary gear shaded in gray is engaged with the position shown in the figure above.
- The second side CIS flat cable may have been damaged when it was removed from the FFC holder ASSY. Be sure to replace the second side CIS flat cable with a new one. Follow the procedure below to attach the new second side CIS flat cable.

<Attachment Procedure>

1) Fold the second side CIS flat cable as shown in the figure below.

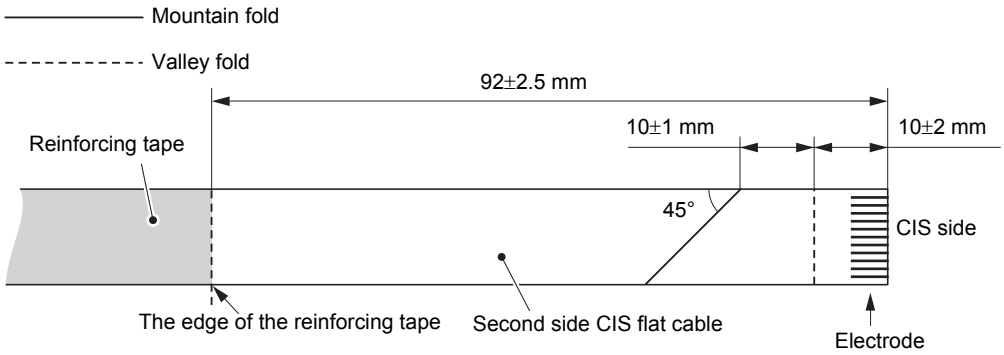

Fig. 3-41

2) Connect the second side CIS flat cable to the second side CIS unit.
3) Pass the second side CIS flat cable through the upper document chute ASSY and the lower document chute ASSY.

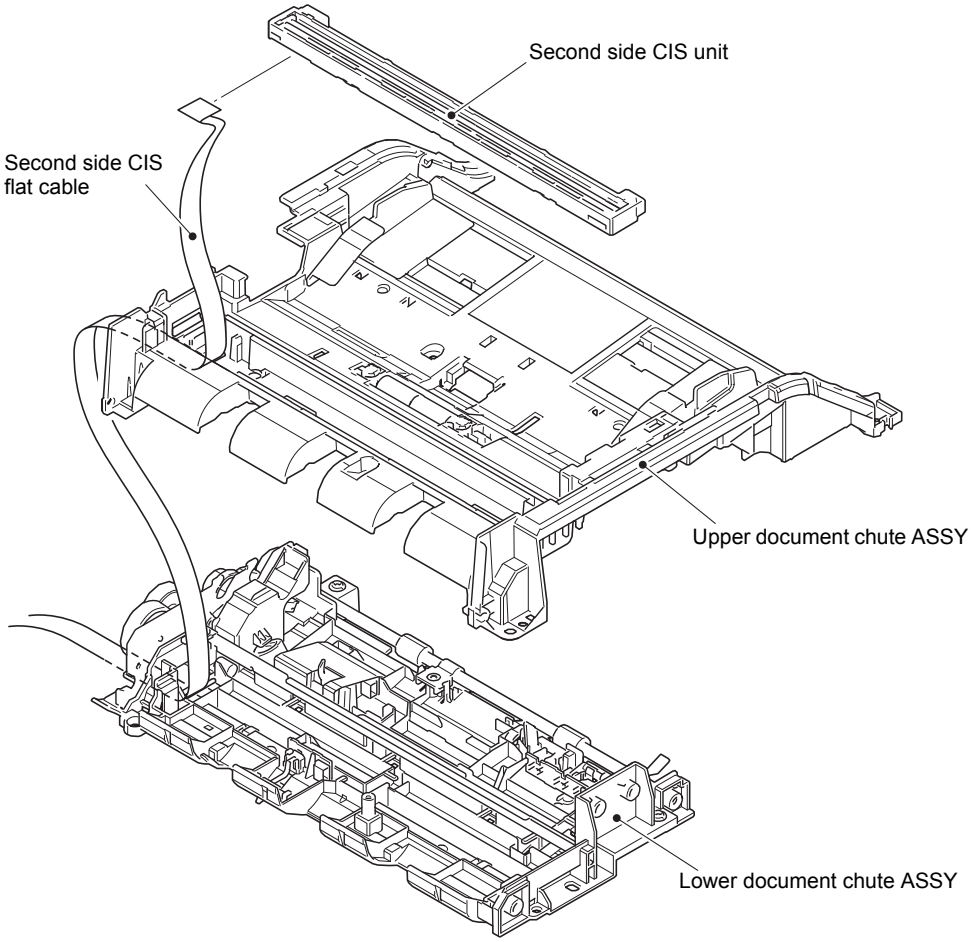

Fig. 3-42

Confidential

4) Attach the double-sided tape to the FFC holder ASSY as shown in the figure below. (If the old double-sided tape remains attached, replace it with new tape.)

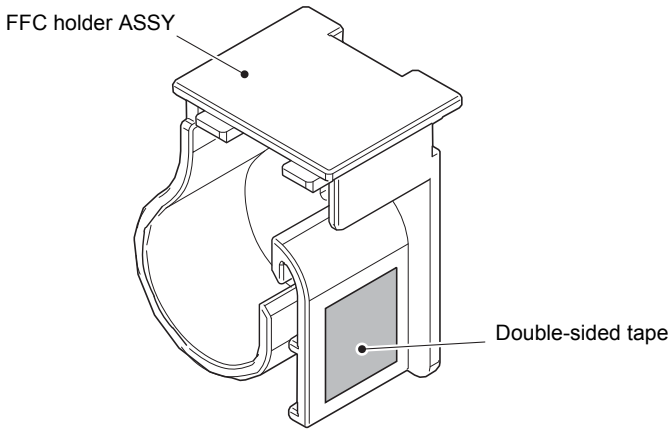

Fig. 3-43

5) Fold the second side CIS flat cable at 201±2 mm away from the second side CIS unit side.

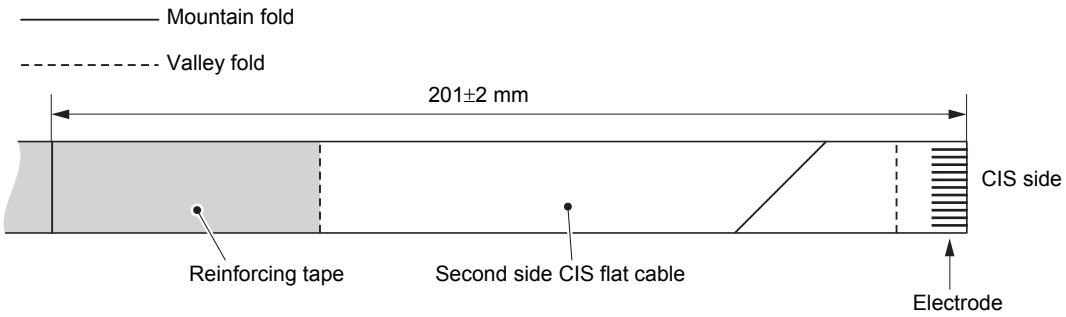

Fig. 3-44

6) As shown in the illustration below, pass the second side CIS flat cable through the FFC holder ASSY while fitting the mountain-folded section to the rib on the FFC holder ASSY. Then secure the second side CIS flat cable with the double-sided tape attached to the FFC holder ASSY.

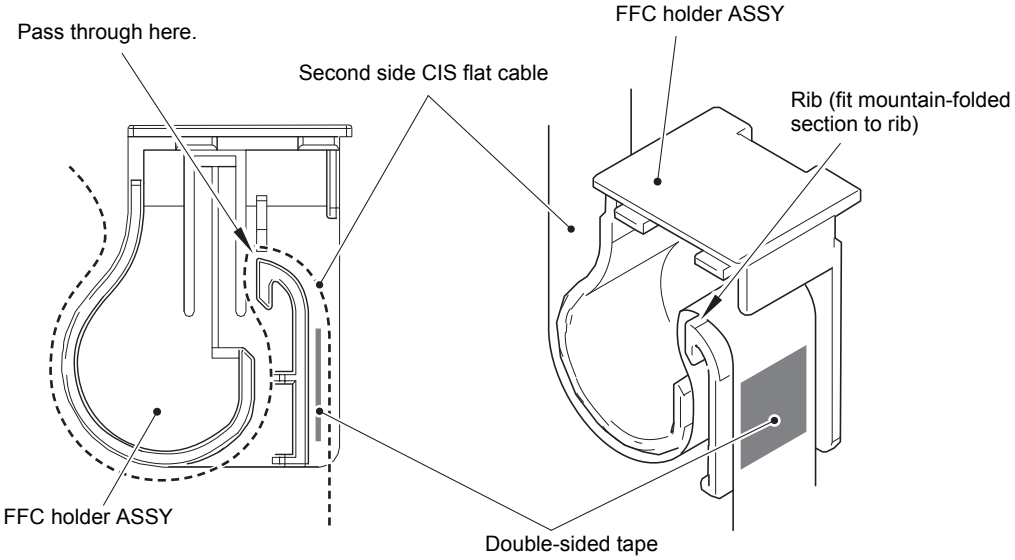

Fig. 3-45

Confidential

7) Fold the other end of the second side CIS flat cable at 75±1 mm away from the main PCB side.

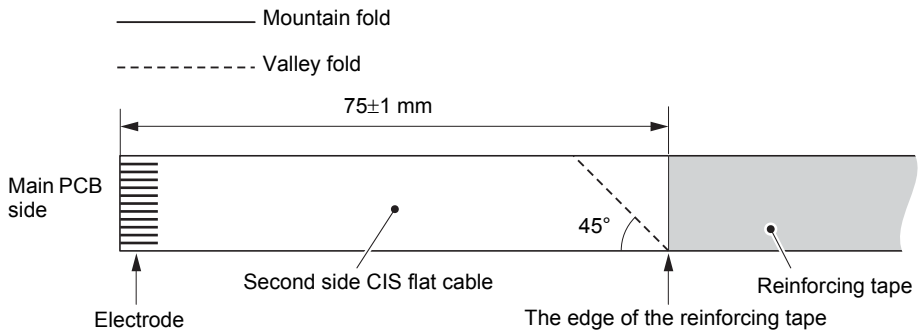

Fig. 3-46

(3) Release the hooks to remove the ejection roller bushing.

(4) Release the lock of the conductive bushing to remove the document ejection roller ASSY from the lower document chute ASSY.

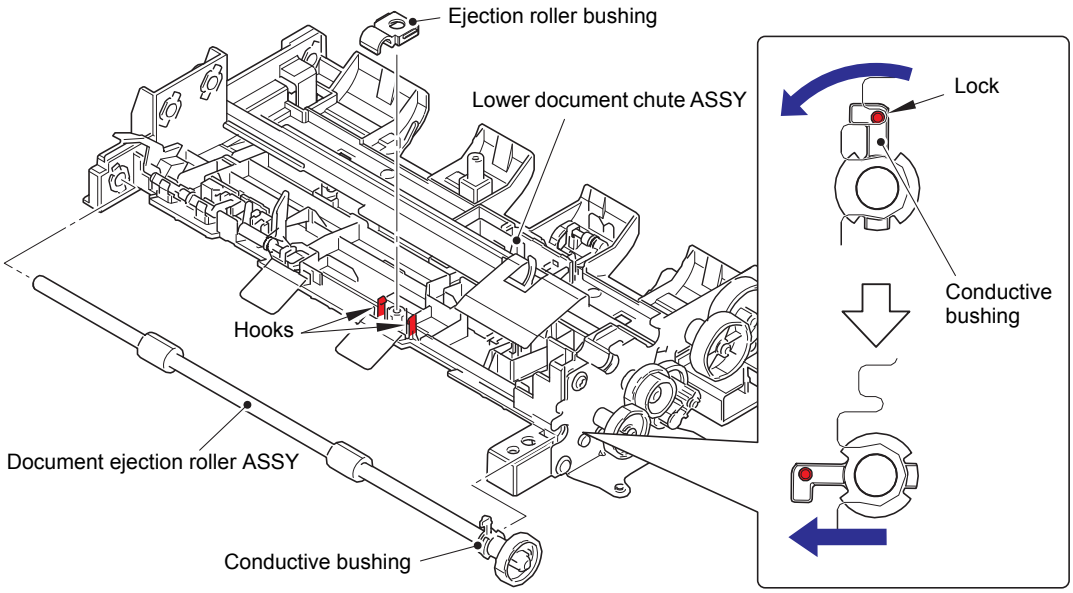

Fig. 3-47

(5) Remove the taptite cup S M3x8 SR screw to remove the ADF FG harness from the drive frame ASSY.

(6) Remove the three taptite cup B M3x10 screws to remove the drive frame ASSY from the lower document chute ASSY. Disconnect the ADF motor harness from the ADF motor.

(7) Release the hook to remove the gear 43 from the drive frame ASSY.

(8) Remove the screw pan (S/P washer) M3x6 screw. Turn the ADF motor in the direction of the arrow, and release it from the claw to remove it from the drive frame ASSY.

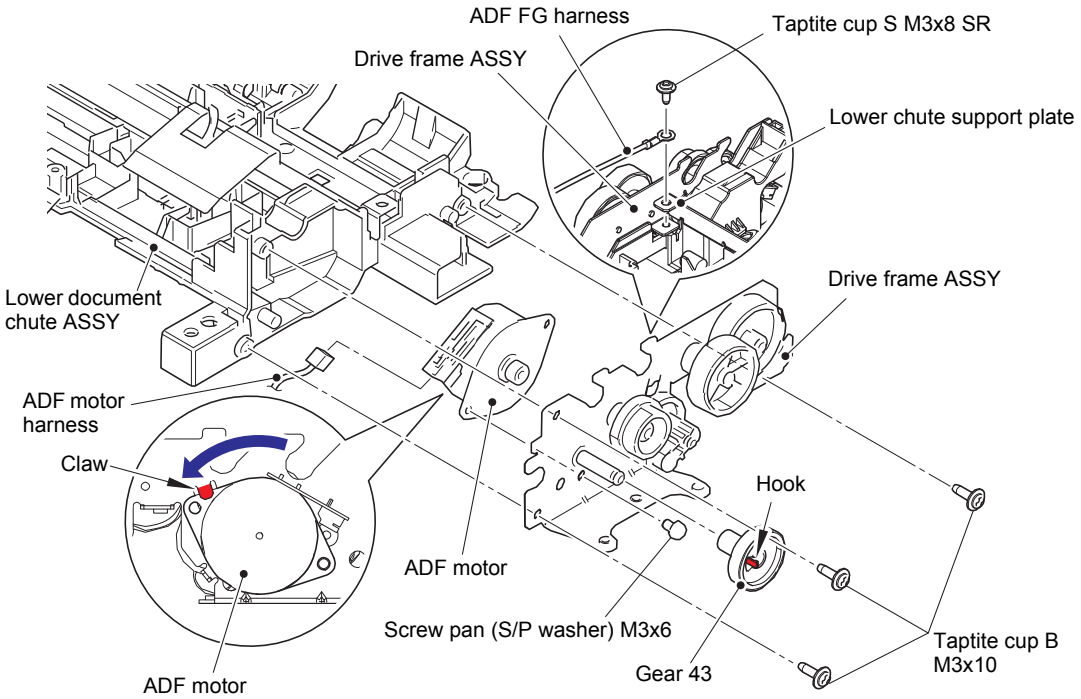

Fig. 3-48

Harness routing: Refer to "8. ADF unit".

Assembling Note:

- When attaching the drive frame ASSY, make sure that the lower chute support plate is above the drive frame ASSY.
- Tighten the lower chute support plate and ADF FG harness together with a taptite cup S M3x8 SR screw.
- Make sure that the terminal of ADF FG harness is located between the rib of the lower document chute ASSY and the left side of the lower chute support plate as shown in the figure below.

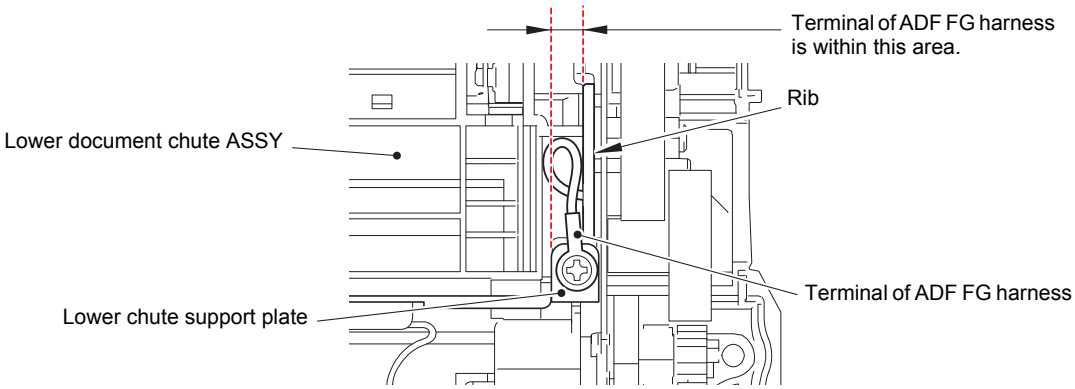

Fig. 3-49

9.12.10 First Side Document Scanning Position Sensor PCB ASSY, Second Side Document Scanning Position Sensor PCB ASSY (Duplex scanning models only), ADF Cover/Document Detection Sensor PCB ASSY

(1) Remove the first side document scanning position sensor PCB ASSY while pushing the rib A. Disconnect the first side document scanning position sensor PCB harness (WH) from the first side document scanning position sensor PCB ASSY.

(2) Peel the film. Remove the second side document scanning position sensor PCB ASSY while pushing the rib B. Disconnect the second side document scanning position sensor PCB harness (BL) from the second side document scanning position sensor PCB ASSY. (Duplex scanning models only)

(3) Remove the ADF cover/document detection sensor PCB ASSY while pushing the rib C. Disconnect the ADF cover/document detection sensor PCB harness from the ADF cover/document detection sensor PCB ASSY.

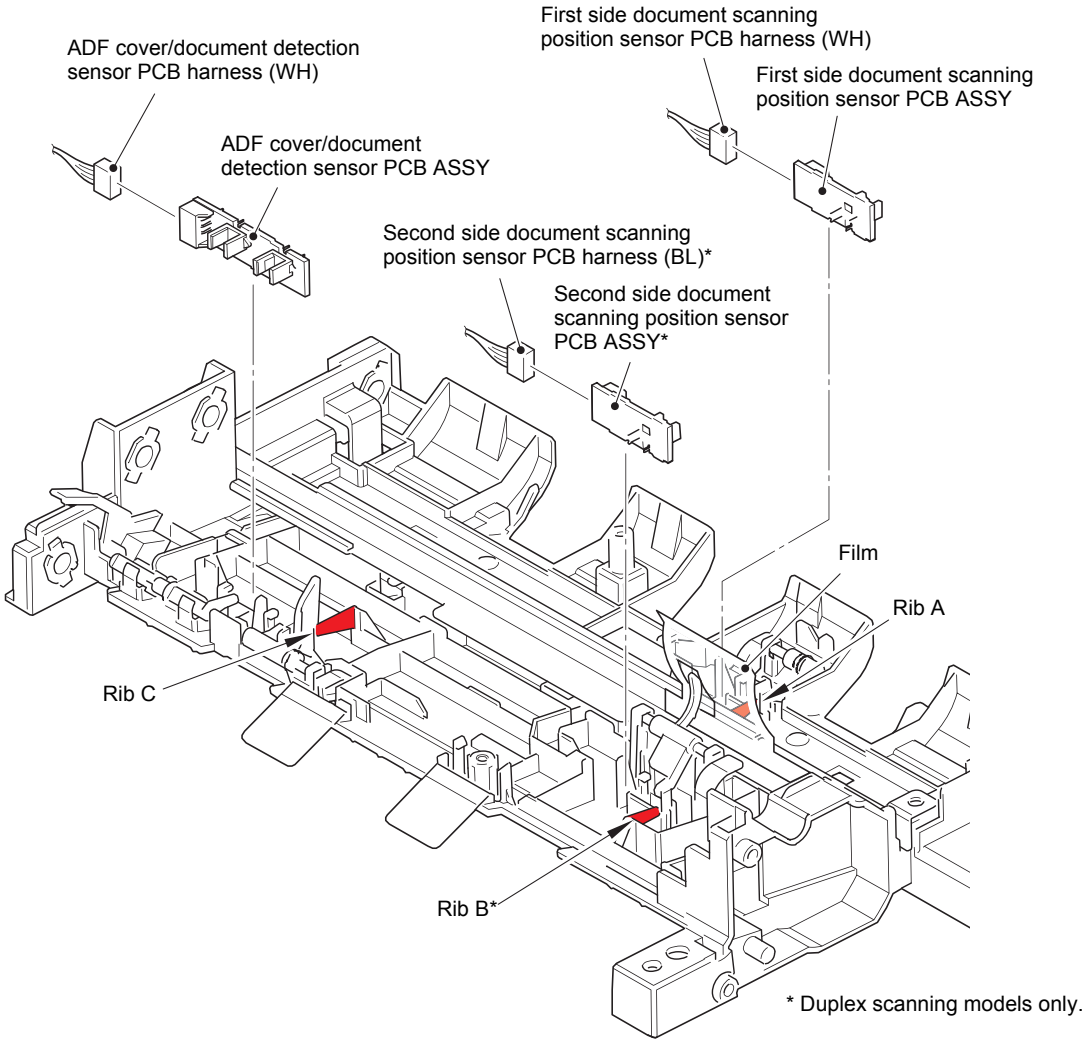

Fig. 3-50

Harness routing: Refer to "8. ADF unit".

9.13 Document Cover ASSY (For models without ADF)

(1) Release the hooks of the hinge L and the hinge R to remove the document cover ASSY by lifting it up.

(2) Remove the taptite cup B M3x10 screw to remove the hinge L support and the hinge L from the hinge arm L.

(3) Remove the taptite cup B M3x10 screw to remove the hinge R support and the hinge R from the hinge arm R.

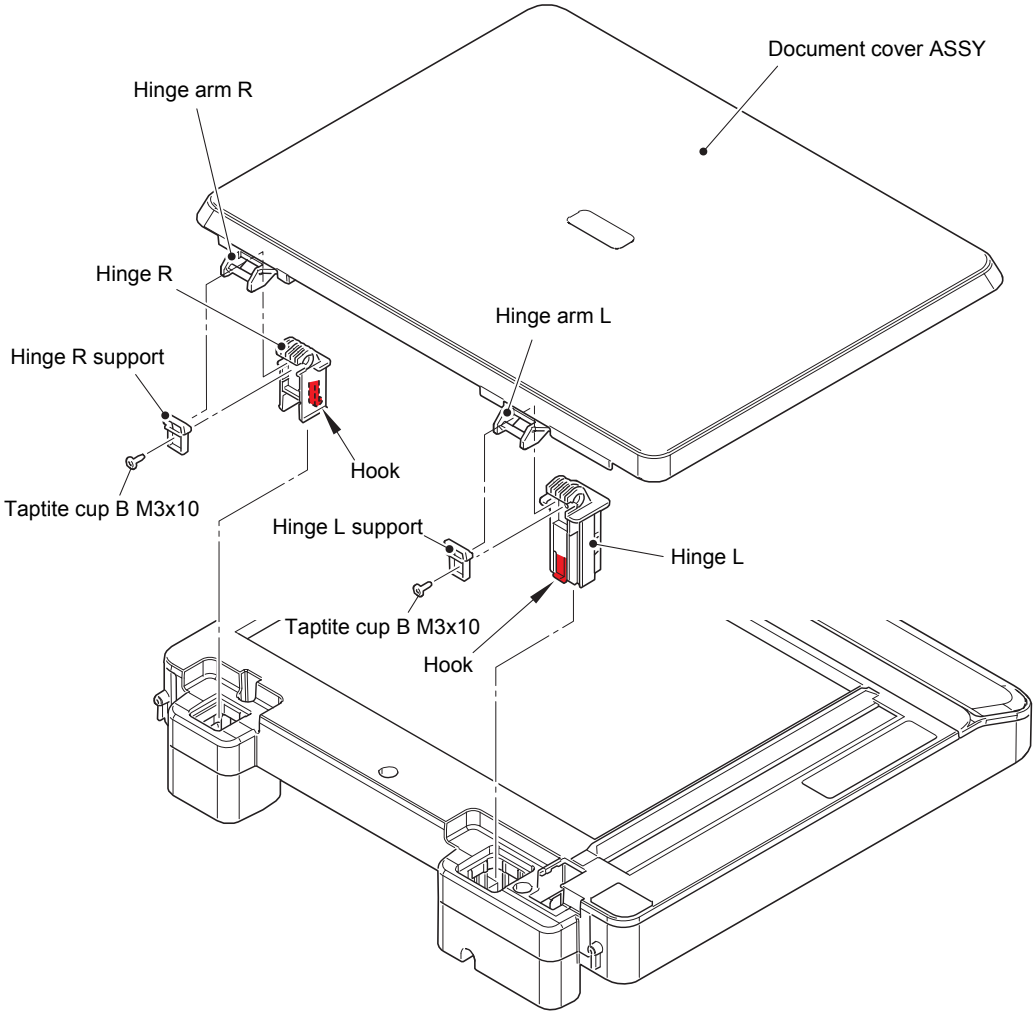

Fig. 3-51

Confidential

(4) Remove the three taptite cup B M3x10 screws to remove the hinge arm L from the document cover ASSY.

(5) Remove the three taptite cup B M3x10 screws to remove the hinge arm R from the document cover ASSY.

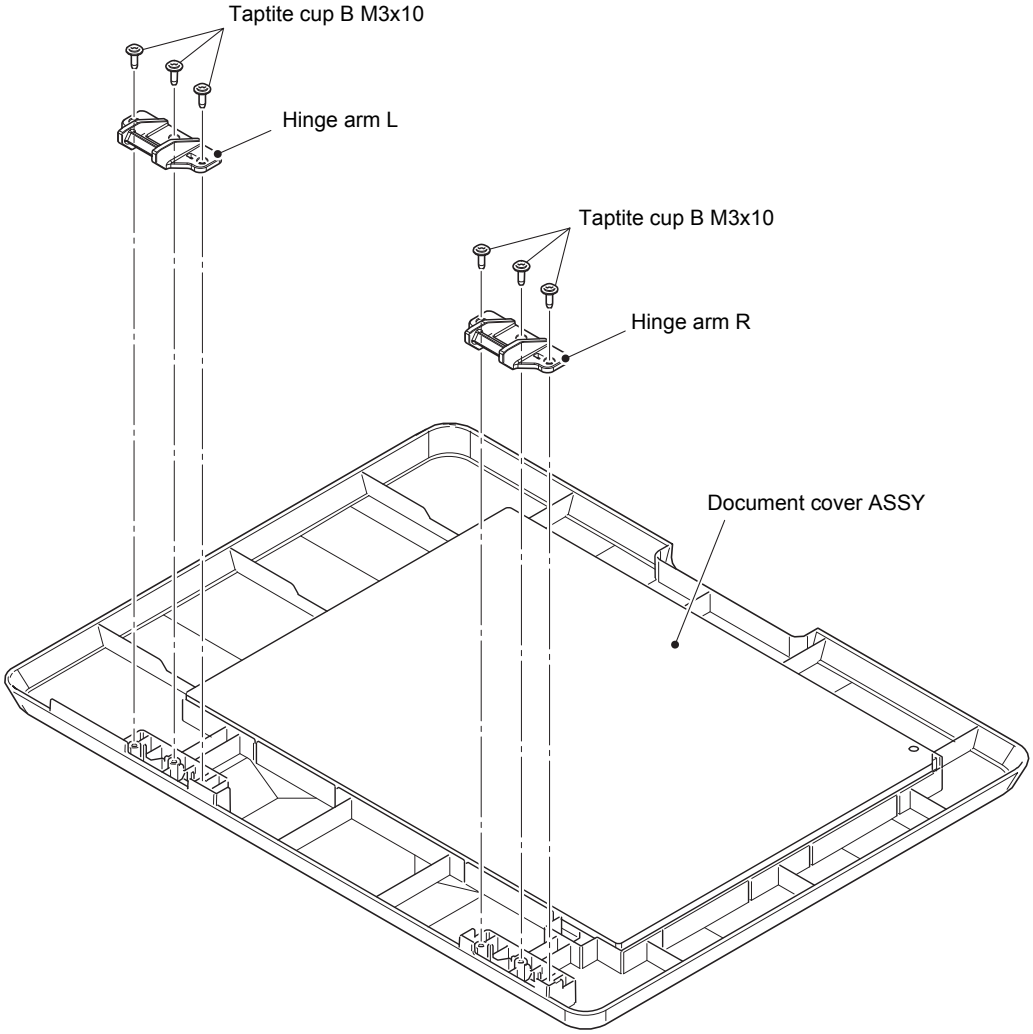

Fig. 3-52

9.14 Panel Unit (For models with touch panel)

9.14.1 Panel Unit

(1) Remove the four taptite cup B M3x10 screws.

(2) Release the claws to remove the panel unit. Disconnect the panel harness from the panel PCB ASSY.

Note:

- When removing the panel unit, DO NOT pull the panel unit strongly because it is connected to the panel harness.

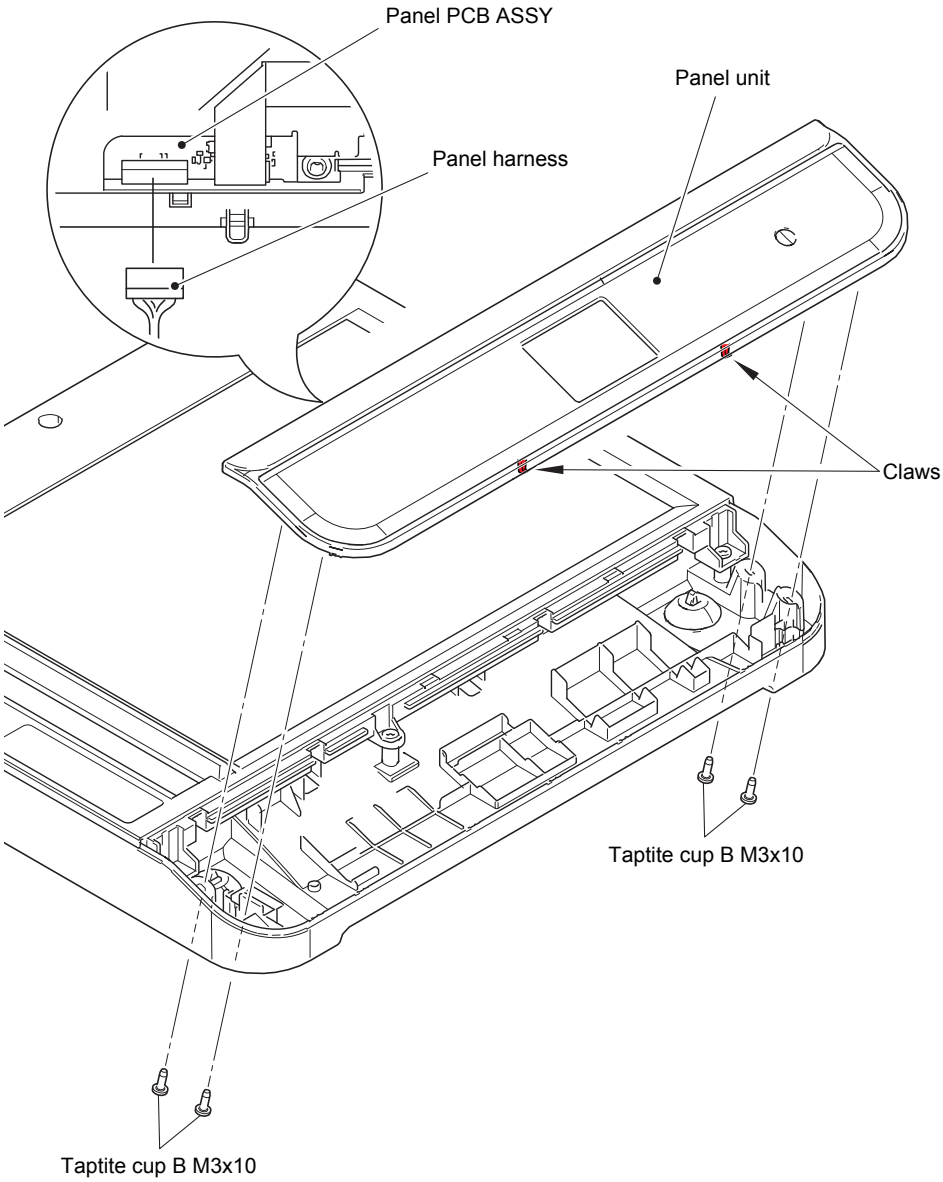

Fig. 3-53

Harness routing: Refer to "9. Scanner unit".

Assembling Note:

- If you replaced the panel unit, refer to "4. IF YOU REPLACE THE PANEL UNIT OR PANEL PCB UNIT" in Chapter 4 to configure settings.

9.14.2 Panel PCB ASSY, LCD

(1) Disconnect the key PCB flat cable from the panel PCB ASSY, and release it from the securing fixtures.

(2) Release the hook to remove the LCD pressure plate from the panel unit.

(3) Remove the four taptite cup B M3x10 screws to remove the shield plate cover from the panel unit.

(4) Remove the panel PCB ASSY. Release the lock to disconnect the LCD flat cable from the panel PCB ASSY.

(5) Remove the shield plate base from the panel unit.

(6) Remove the LCD from the panel unit.

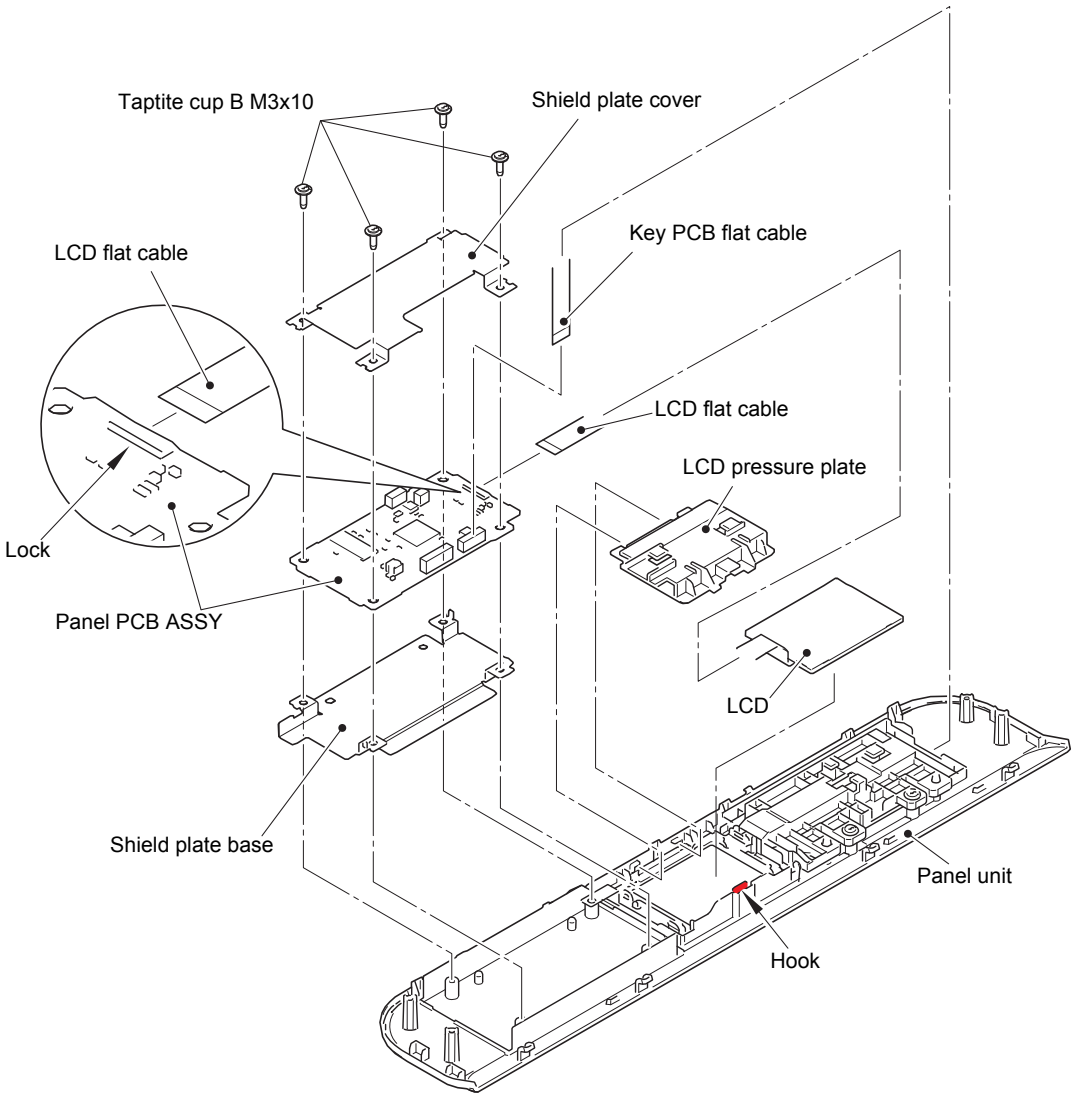

Fig. 3-54

Harness routing: Refer to "10. Panel unit (Touch panel models only)".

9.14.3 Touch Panel ASSY

(1) Remove the two taptite cup B M3x10 screws to remove the panel key PCB presser from the panel unit.

(2) Disconnect the touch panel flat cable from the key PCB ASSY.

(3) Remove the touch panel plate and the LCD frame sheet from the panel unit.

(4) Remove the touch panel ASSY from the panel unit.

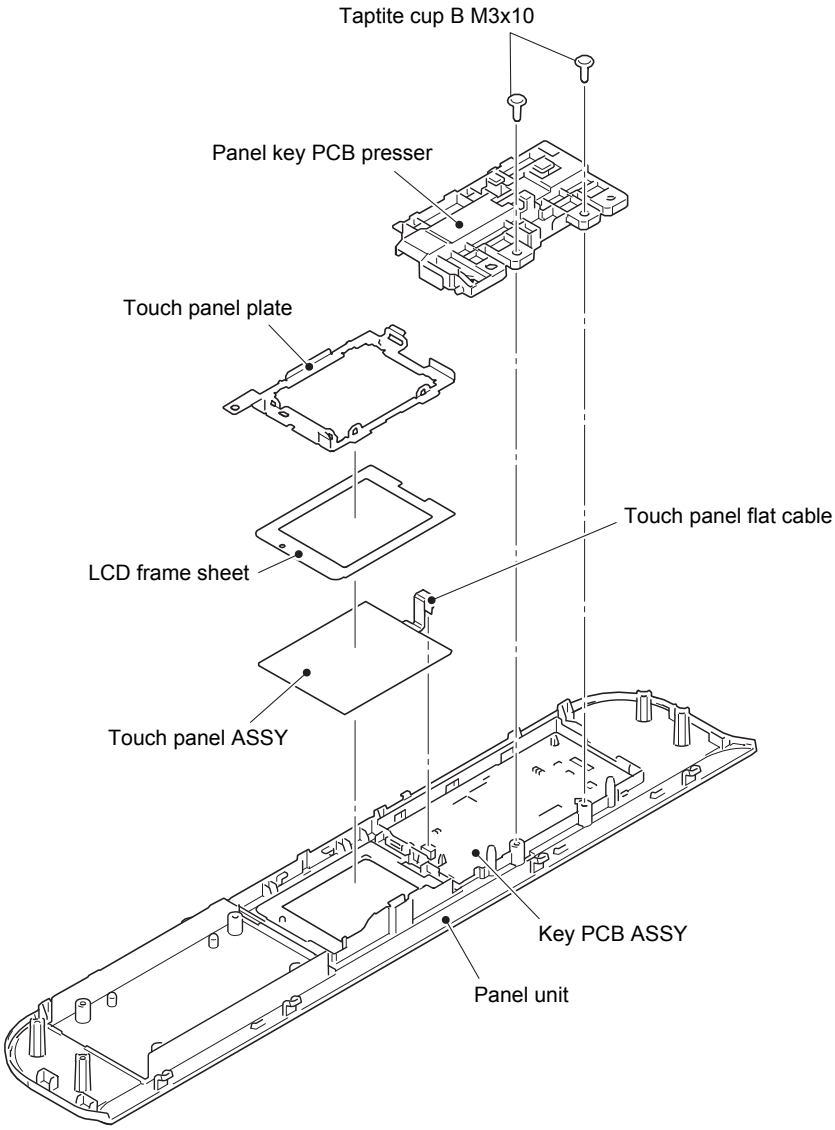

Fig. 3-55

Assembling Note:

- If you replaced the touch panel ASSY, refer to "4. IF YOU REPLACE THE PANEL UNIT OR PANEL PCB UNIT" in Chapter 4 to configure settings.

9.15 Panel Unit (For models without touch panel)

9.15.1 Panel Unit

(1) Remove the four taptite cup B M3x10 screws.

(2) Release the claws to remove the panel unit. Disconnect the panel harness from the panel PCB ASSY.

Note:

- When removing the panel unit, DO NOT pull the panel unit strongly because it is connected to the panel harness.

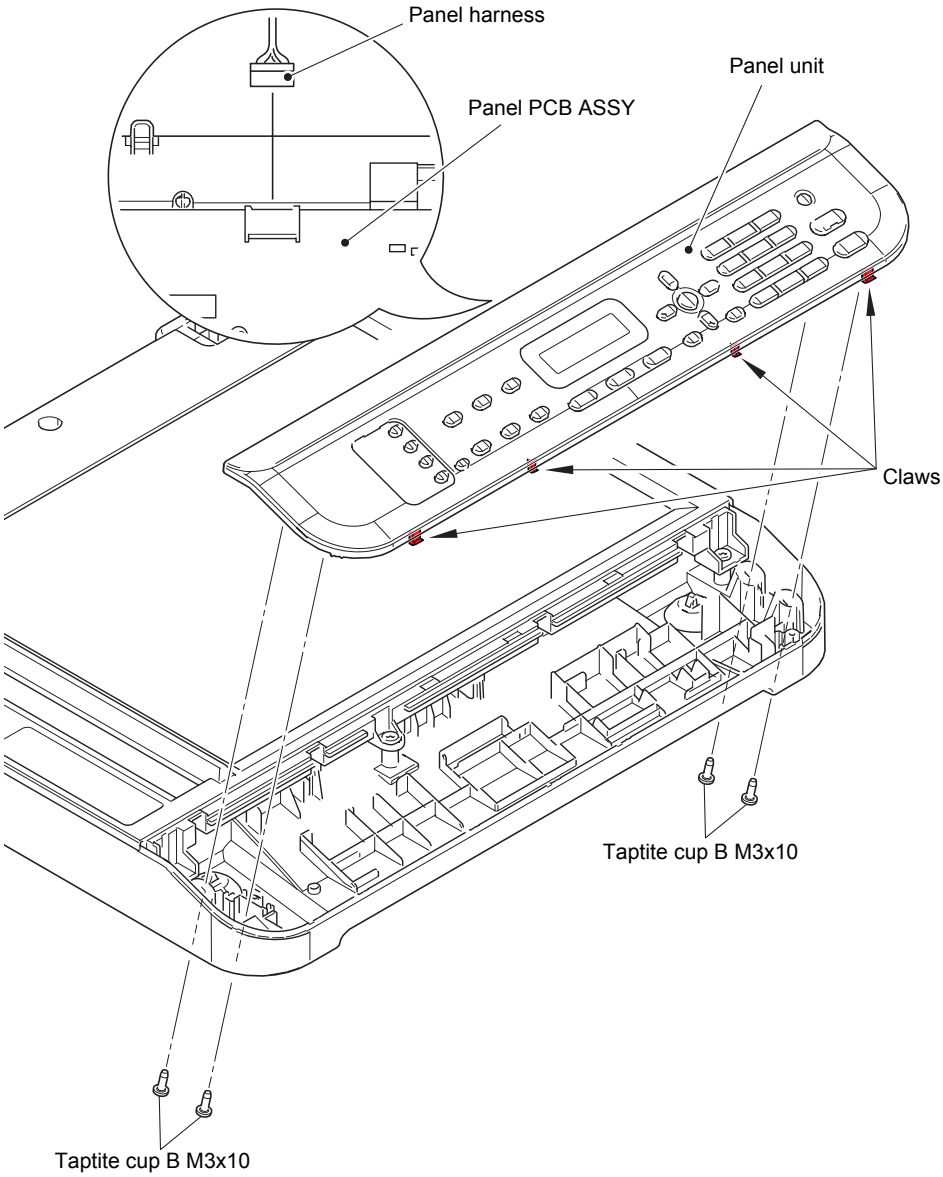

Fig. 3-56

Harness routing: Refer to "9. Scanner unit".

9.15.2 Panel PCB ASSY

(1) Release the hooks to remove the panel PCB ASSY from the panel unit.

(2) Reverse the panel PCB ASSY. Release the locks to disconnect the LCD flat cable from the panel PCB ASSY.

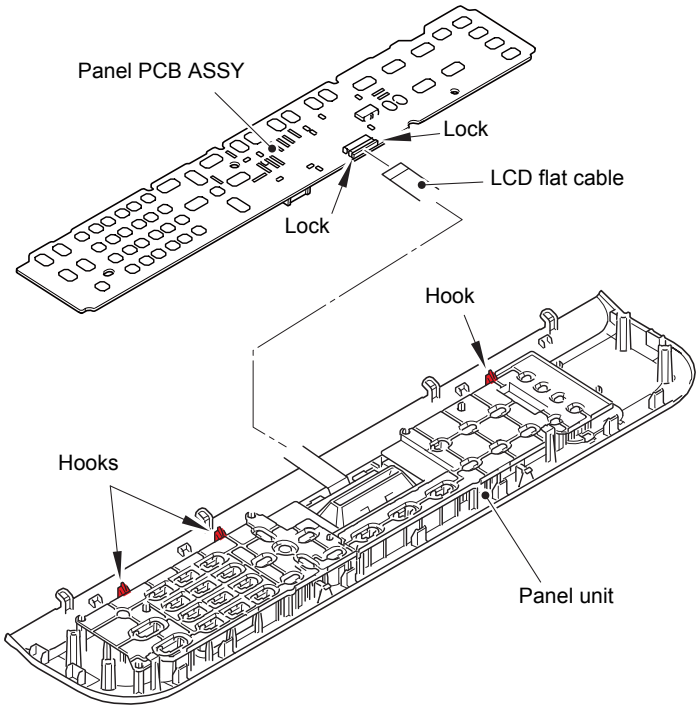

Fig. 3-57

Confidential

9.15.3 LCD

(1) Remove the rubber key L and the rubber key R from the panel unit.

(2) Release the hooks A to remove the backlight guide from the panel unit.

(3) Release the hooks B to remove the LCD and the diffusion film from the backlight guide.

(4) Remove the LCD sheet from the panel unit.

(5) Remove the address label from the panel unit.

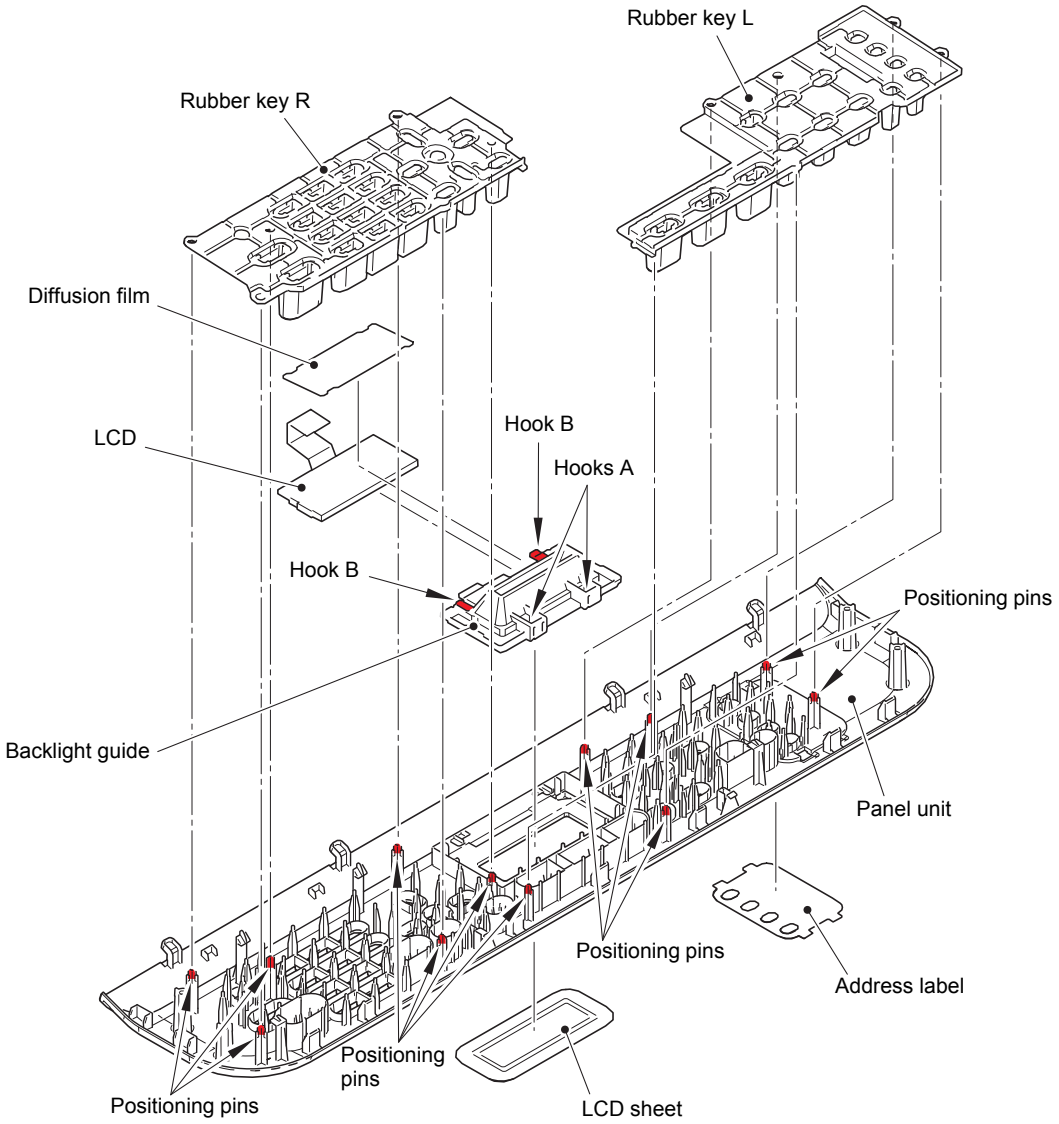

Fig. 3-58

Assembling Note:

- When assembling the LCD, attach the rubber key R and rubber key L in this order.
- Make sure that the positioning pins are inserted to the holes of the rubber key L/R.
- DO NOT bend the hooks when removing them. If the hooks are deformed, the LCD may not be attached to the backlight guide or the backlight guide may not be attached to the panel unit.

9.16 First Side CIS Unit, First Side CIS Flat Cable

Note:

- Disassemble in a dust-free location.

(1) Remove the six taptite bind B M4x12 screws.

(2) Remove the document scanner top cover from the document scanner bottom cover ASSY.

(3) Remove the CIS roller holder L ASSY and the CIS roller holder R ASSY from the first side CIS unit.

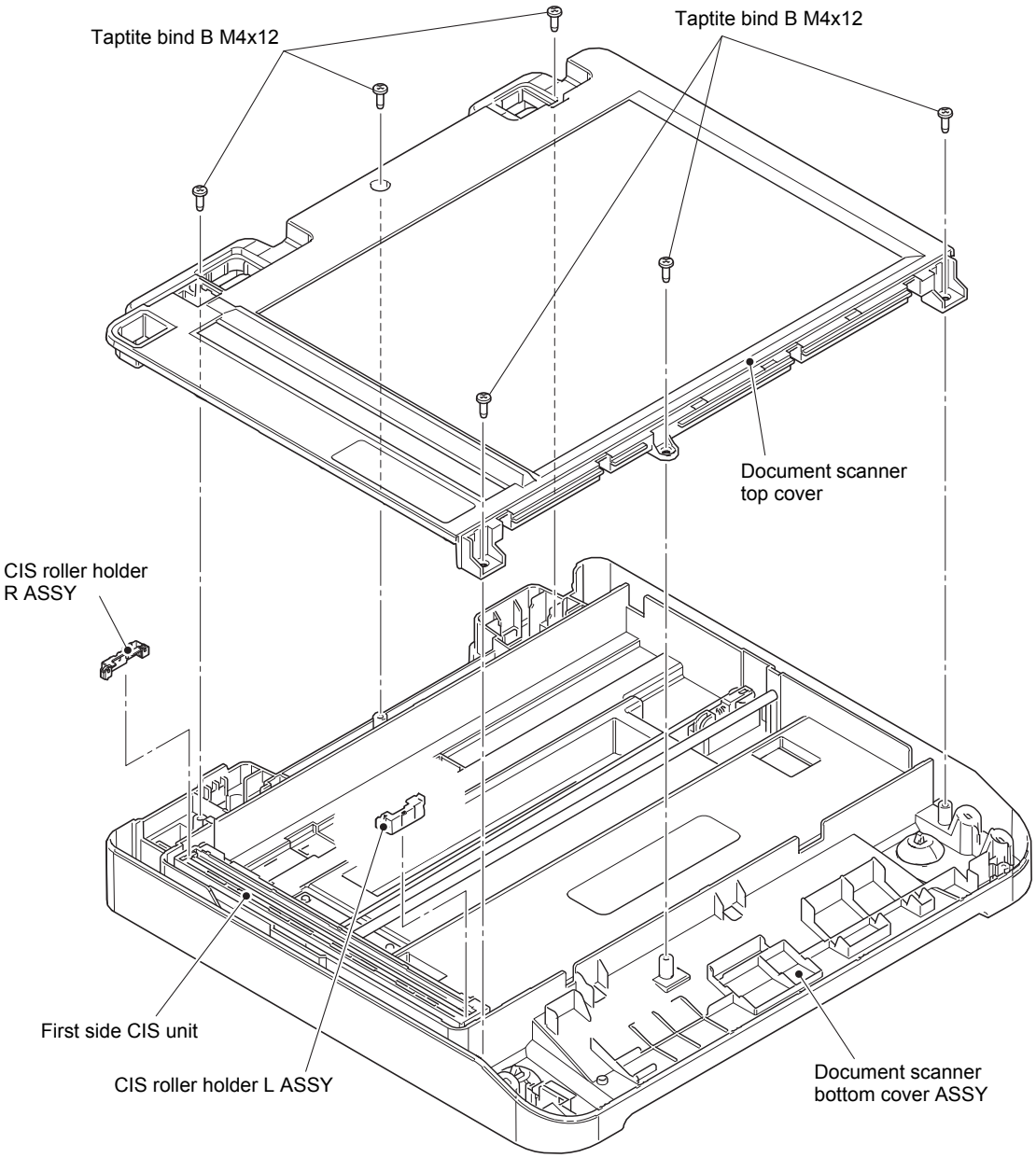

Fig. 3-59

Assembling Note:

- If you replaced the first side CIS unit, refer to "5. IF YOU REPLACE THE FIRST SIDE CIS UNIT OR DOCUMENT SCANNER UNIT" in Chapter 4 to configure settings.

(4) Slide the CIS carriage slowly to the location shown in the figure below.

(5) Open the first side CIS unit at 90 degrees to the CIS carriage, and slide it in the direction of the arrow to remove it by releasing the two bosses. Disconnect the first side CIS flat cable from the first side CIS unit.

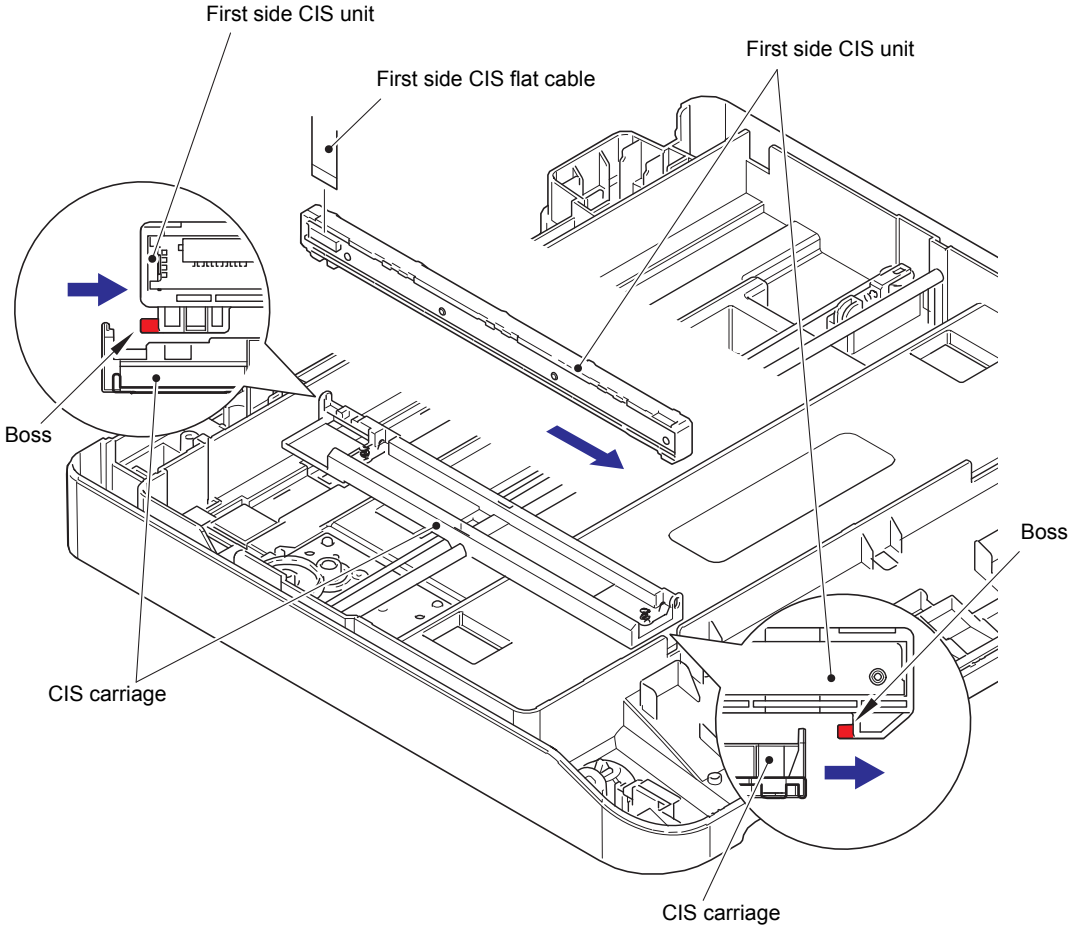

Fig. 3-60

Assembling Note:

- Acquire the white level data, and set the CIS scanning area.
  (Refer to "Acquire white level data and set CIS scan area (function code: 55)" in Chapter 5.)

(6) Remove the CIS carriage from the CIS drive belt.

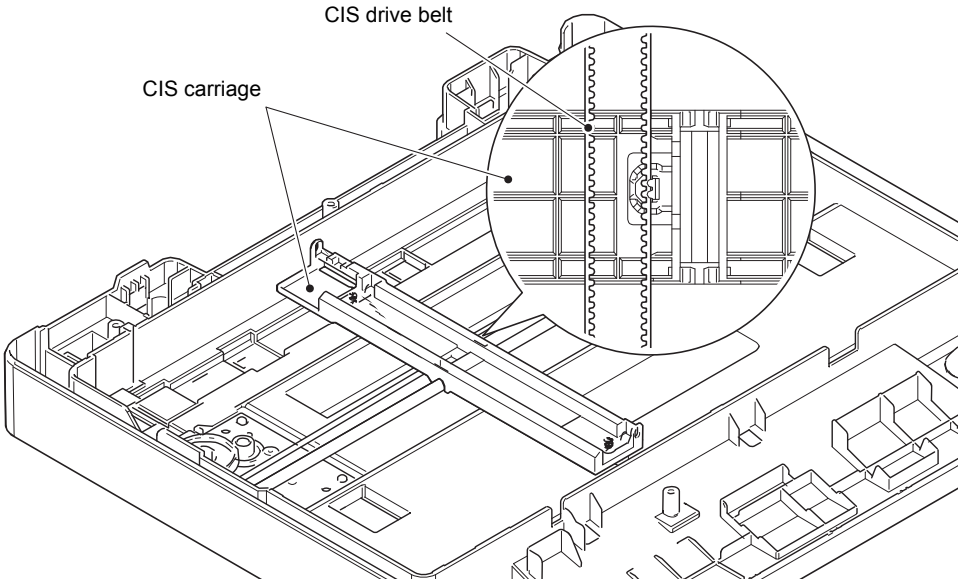

Fig. 3-61

(7) Remove the first side CIS flat cable attached on the back of the CIS carriage from the double-sided tape.

Note:

- Be sure to replace the double-sided tape with a new one, after taking off the first side CIS flat cable from the double-sided tape.

(8) Remove the first side CIS flat cable from the document scanner bottom cover ASSY.

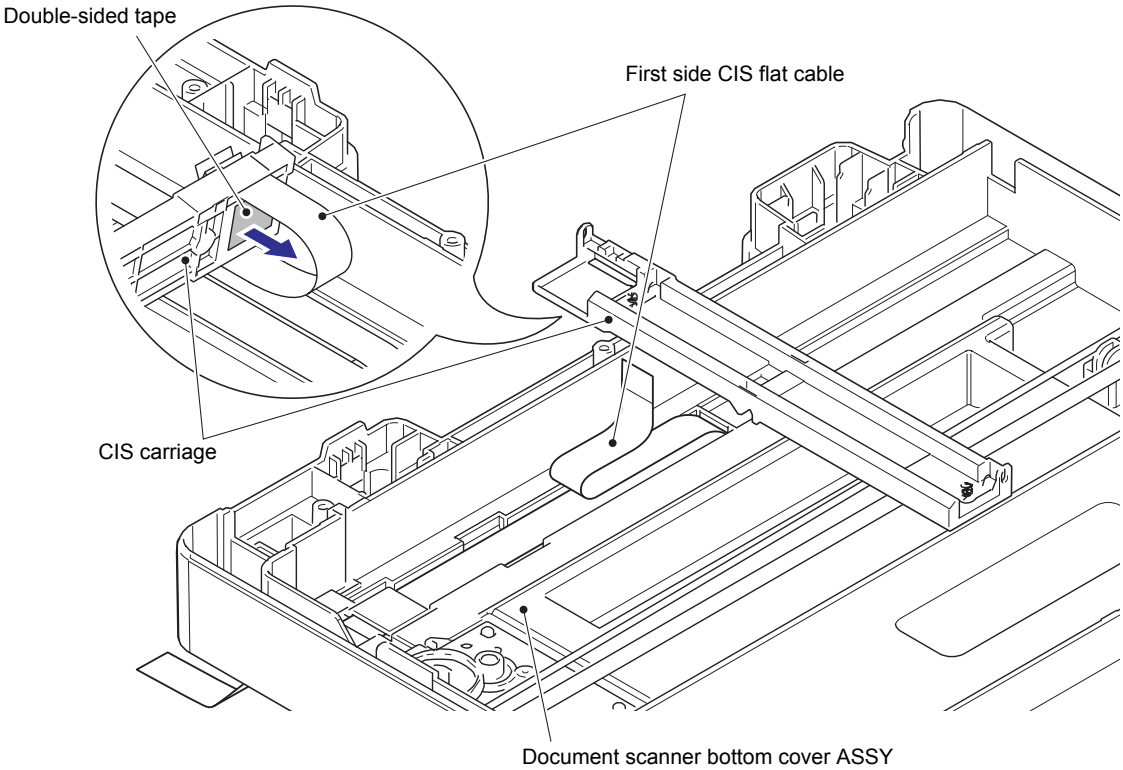

Fig. 3-62

<Attachment Procedure>

1) Fold the first side CIS flat cable as shown in the illustration below.

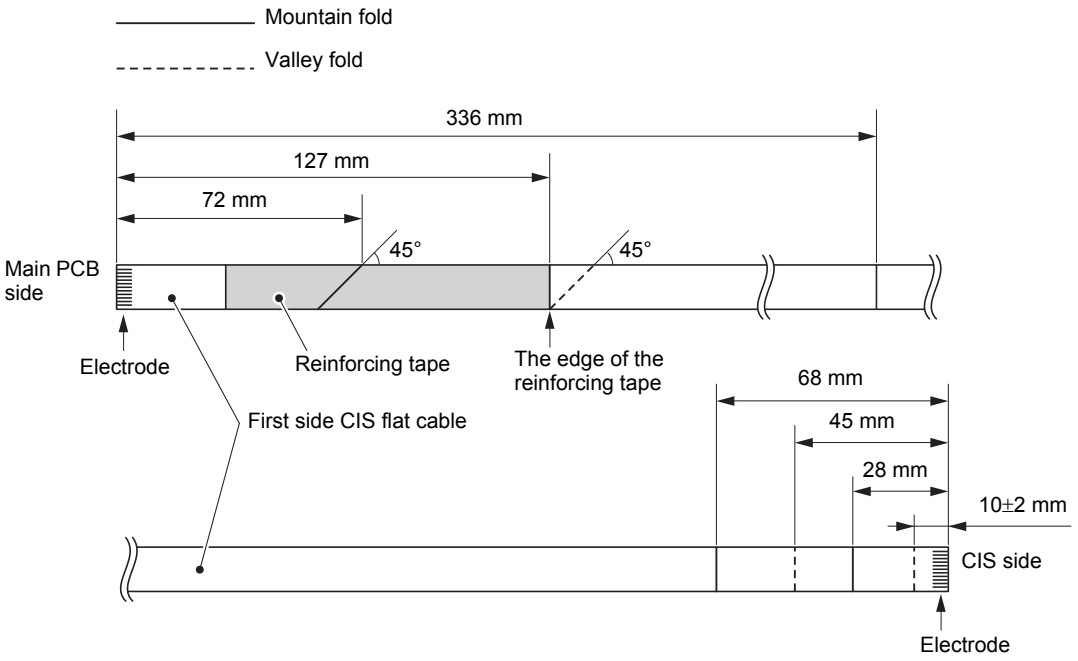

Fig. 3-63

2) Attach the two pieces of 12 mm x 12 mm double-sided tape to the document scanner bottom cover ASSY at positions shown in the figure below. (If the old double-sided tape remains attached, replace it with a new tape.)

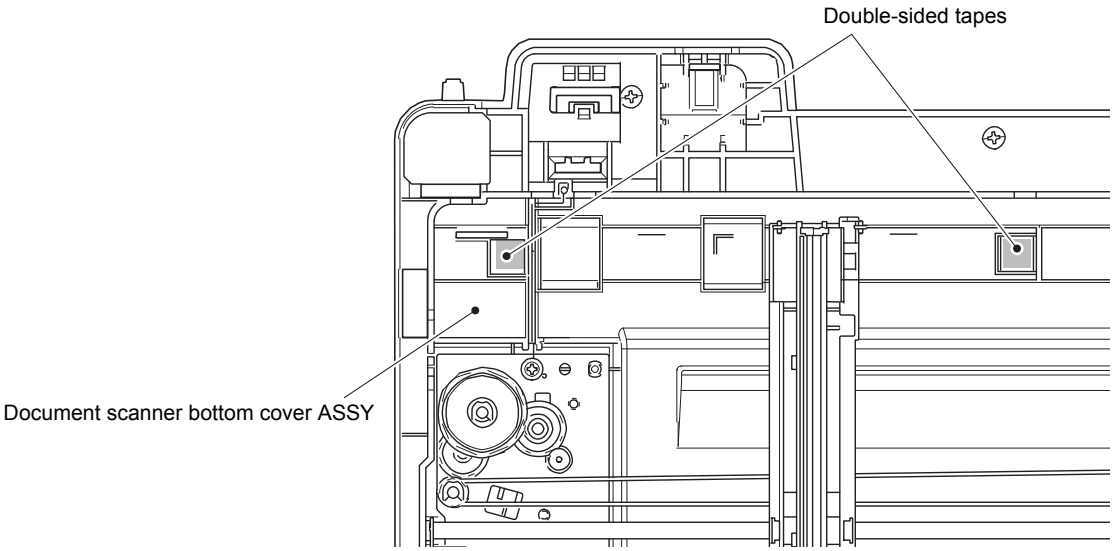

Fig. 3-64

Confidential

3) Attach the 12 mm x 12 mm double-sided tape to the CIS carriage at positions shown in the figure below. (If the old double-sided tape remains attached, replace it with a new tape.)

4) Connect the first side CIS flat cable to the first side CIS unit.

5) Attach the first side CIS unit to the CIS carriage.

6) Peel the release liner of the double-sided tape attached to the CIS carriage, and secure the first side CIS flat cable with the tape as shown in the figure below.

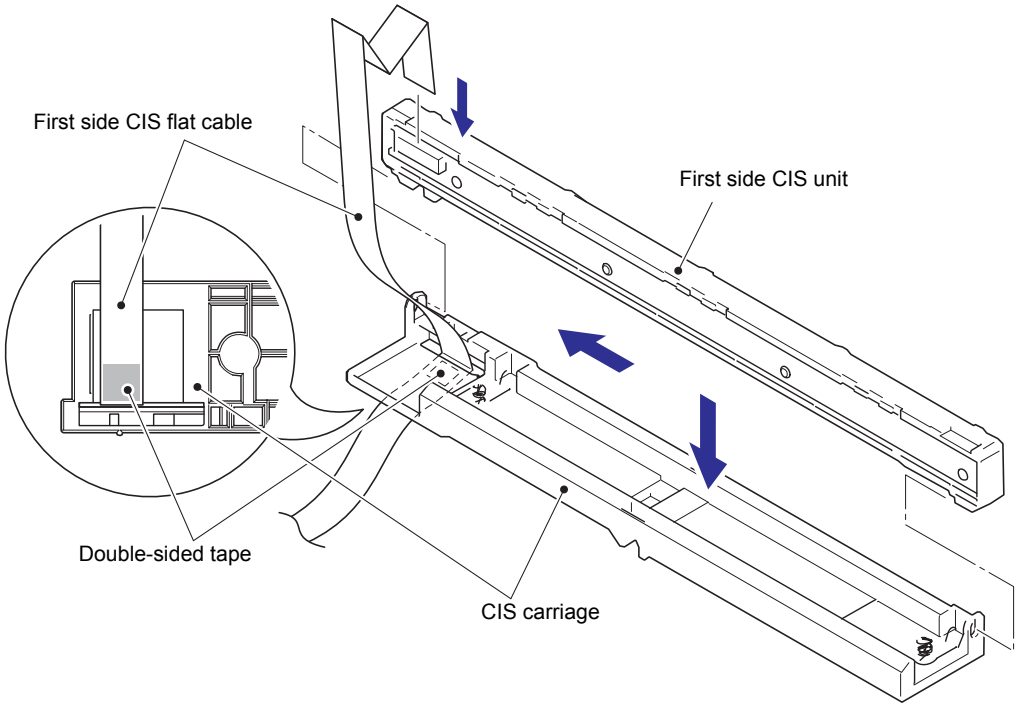

Fig. 3-65

Confidential

7) Pass the first side CIS flat cable through the flat core.

8) Peel the release liner of the two pieces of double-sided tape attached to the document scanner bottom cover ASSY, and secure the first side CIS flat cable with the tape as shown in the figure below.

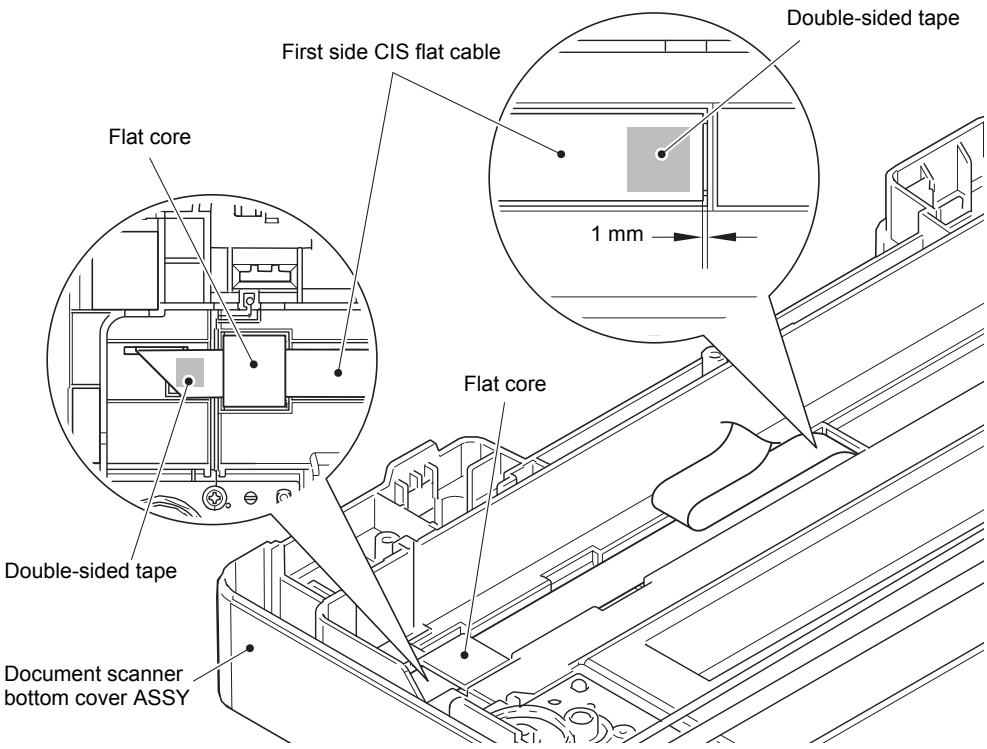

Fig. 3-66

Harness routing: Refer to "9. Scanner unit".

9.17 Lock Claw, Pull Arm Guide

(1) Remove the lock claw. Release the hook to remove the pull arm guide. (2 locations)

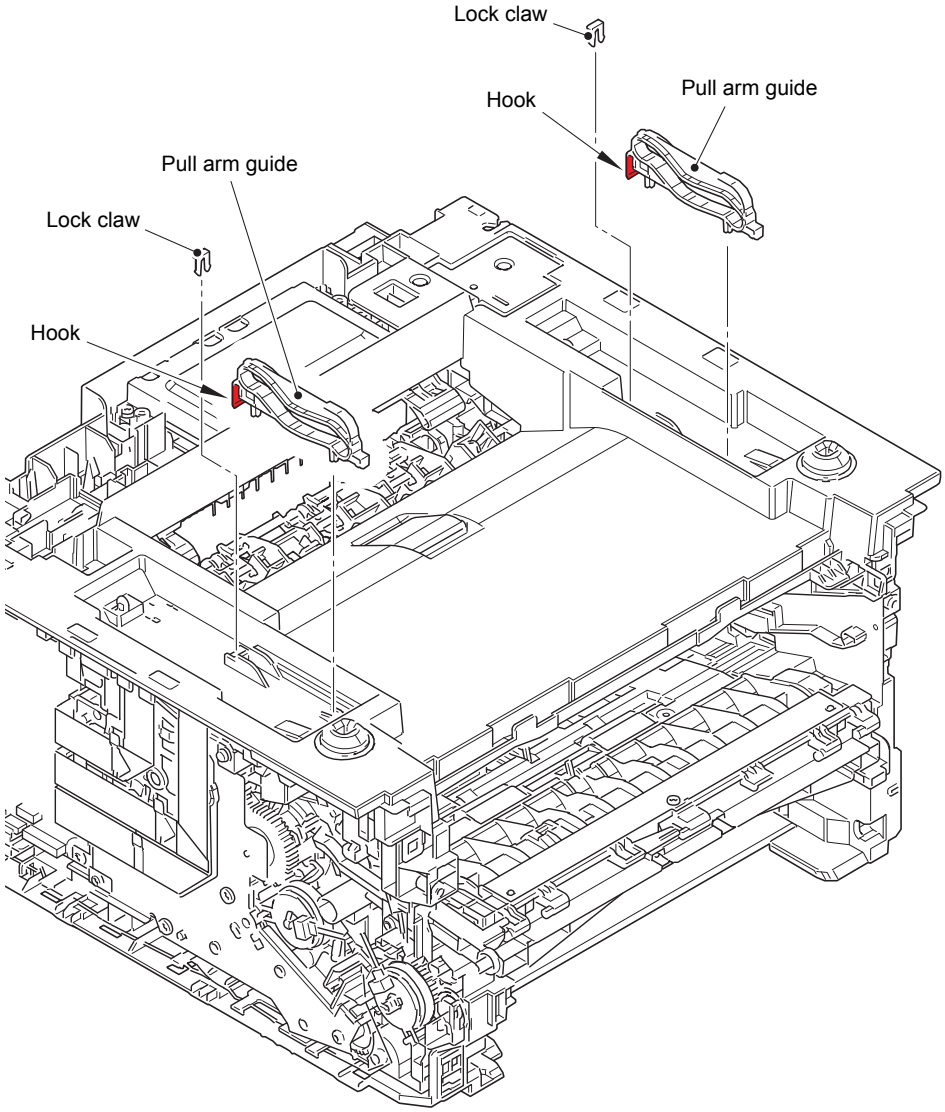

Fig. 3-67

Confidential

9.18 Modem PCB ASSY

(1) Release the hook to remove the speaker cover.

(2) Remove the two screw pan (S/P washer) M3.5x6 screws, and release the modem FG harness LVPS from the securing fixtures.

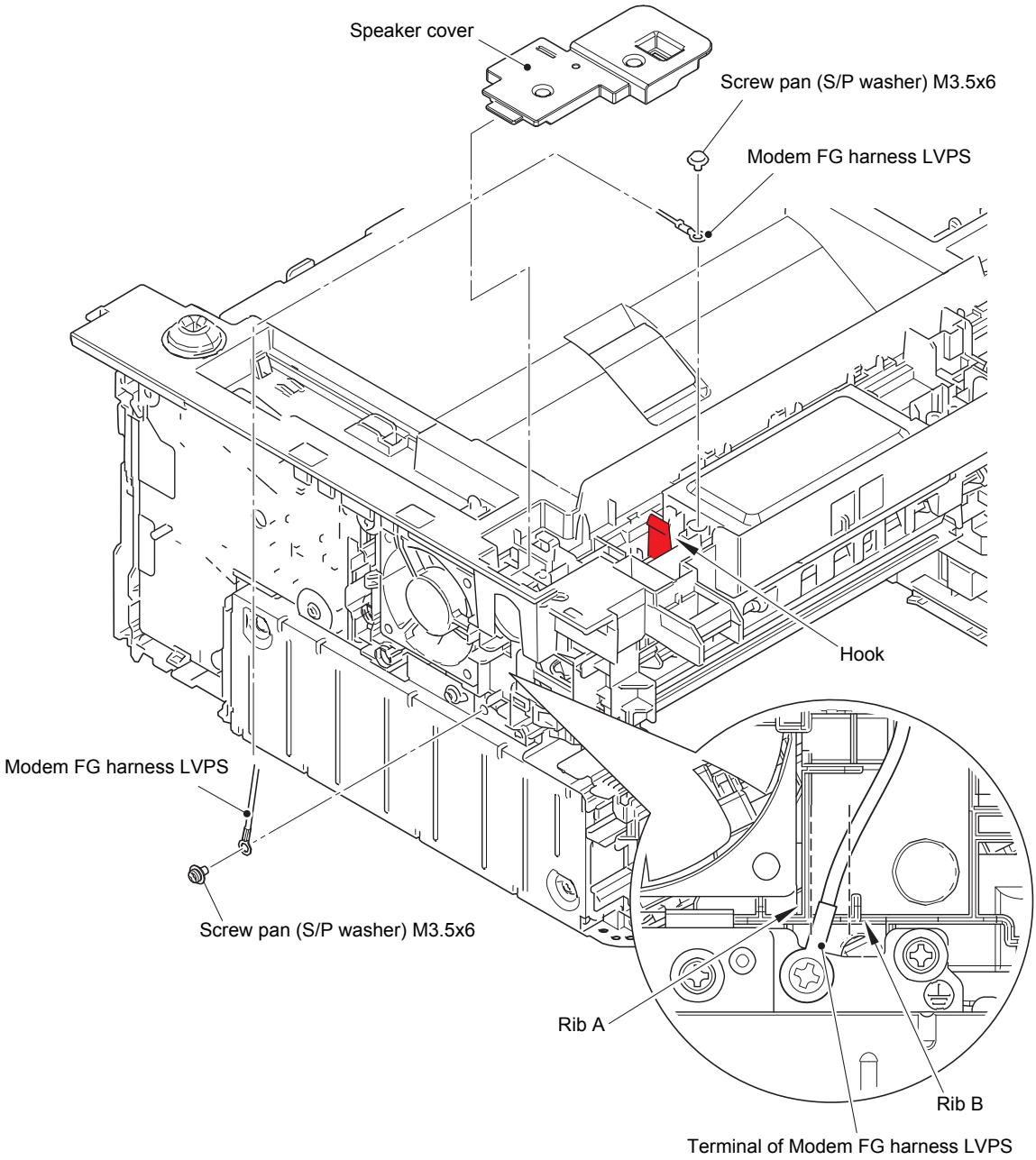

Fig. 3-68

Harness routing: Refer to "7. Speaker unit, Modem (LVPS side)".

Assembling Note:

- Make sure that the terminal of modem FG harness LVPS is located between the rib A and rib B as shown in the figure above.

(3) Remove the screw pan (S/P washer) M3.5x6 screw and the taptite cup S M3x8 SR to release the modem FG harness main from the securing fixtures.
(4) Disconnect the modem flat cable from the main PCB ASSY and the modem PCB ASSY, and release it from the securing fixtures.
(5) Remove the two taptite bind B M4x12 screws to remove the modem shield plate.
(6) Remove the screw pan (S/P washer) M3.5x6 screw to remove the modem shield cover from the modem shield plate.
(7) Remove the two taptite cup S M3x6 SR screws to remove the modem PCB ASSY from the modem shield plate.

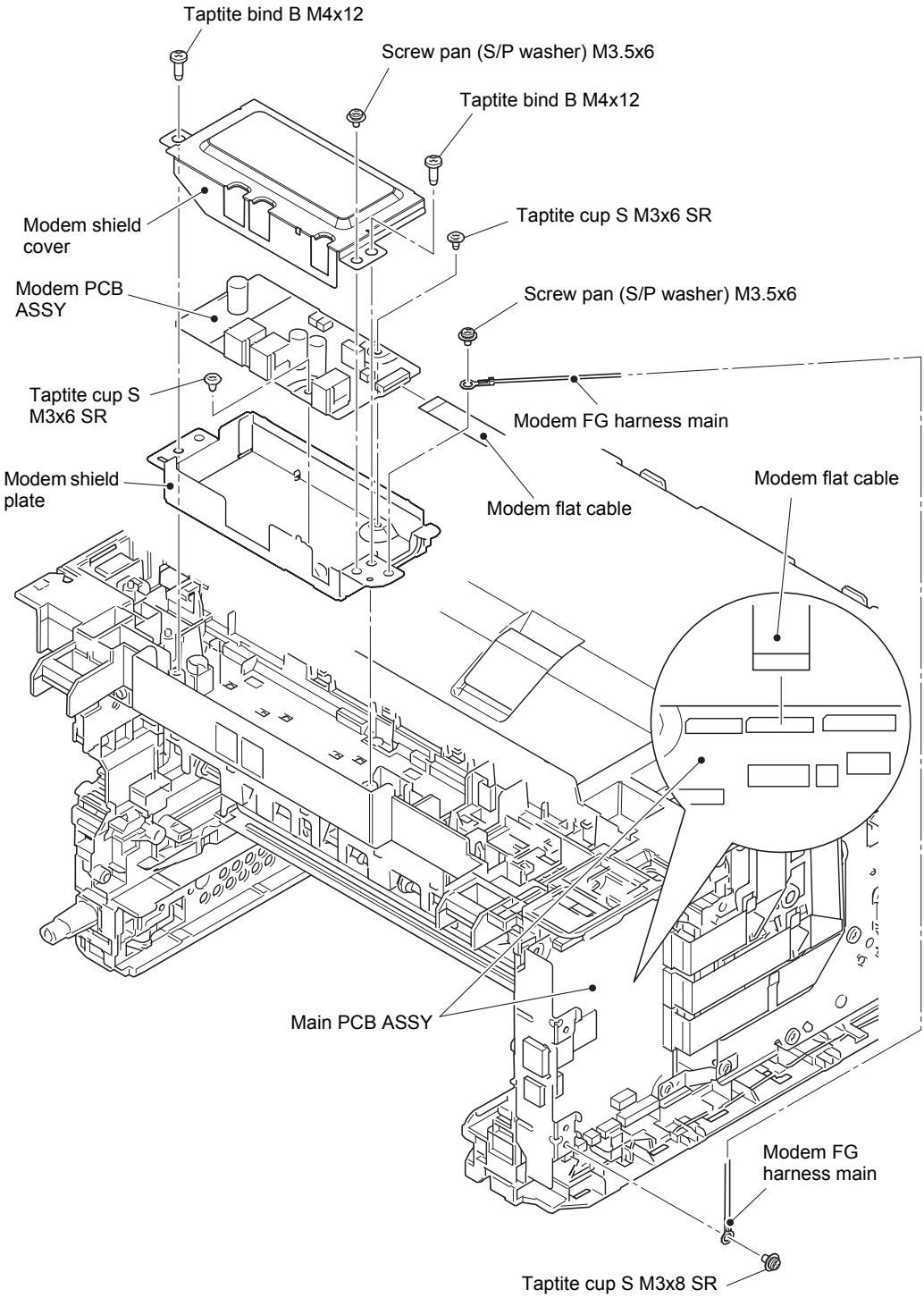

Fig. 3-69

Harness routing: Refer to "6. Speaker unit, Modem (Main PCB side)".

9.19 Speaker Unit

(1) Disconnect the speaker harness from the main PCB ASSY, and release it from the securing fixtures.

(2) Remove the speaker hold spring while pushing the hook of the speaker hold spring with a flat-blade screwdriver.

(3) Remove the speaker unit.

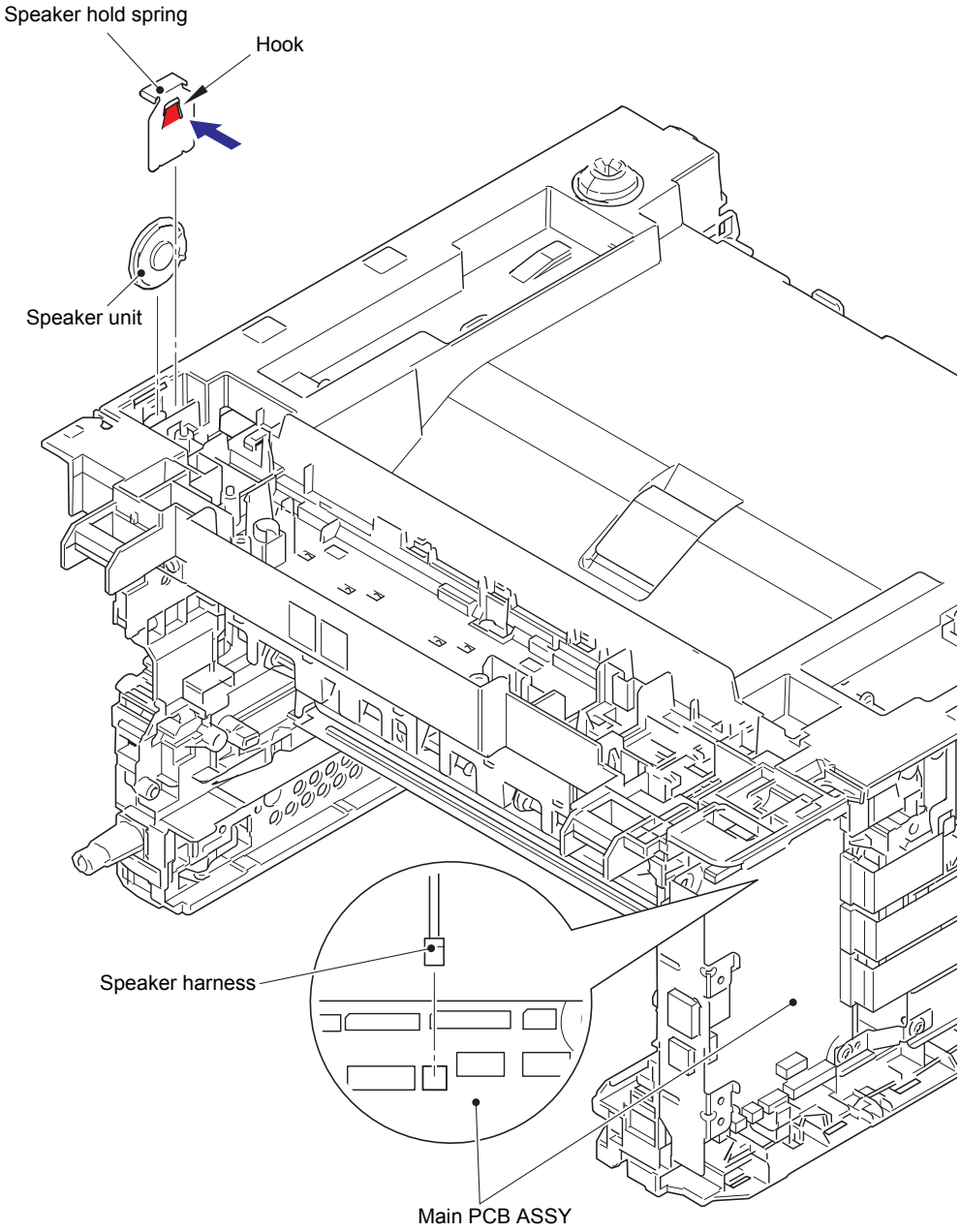

Fig. 3-70

Harness routing: Refer to "6. Speaker unit, Modem (Main PCB side)", "7. Speaker unit, Modem (LVPS side)".

9.20 Joint Cover ASSY

(1) Remove the four taptite bind B M4x12 screws.

(2) Release the hooks on the joint cover ASSY in order of the hook A to F, and remove the joint cover ASSY in the direction of the arrow.

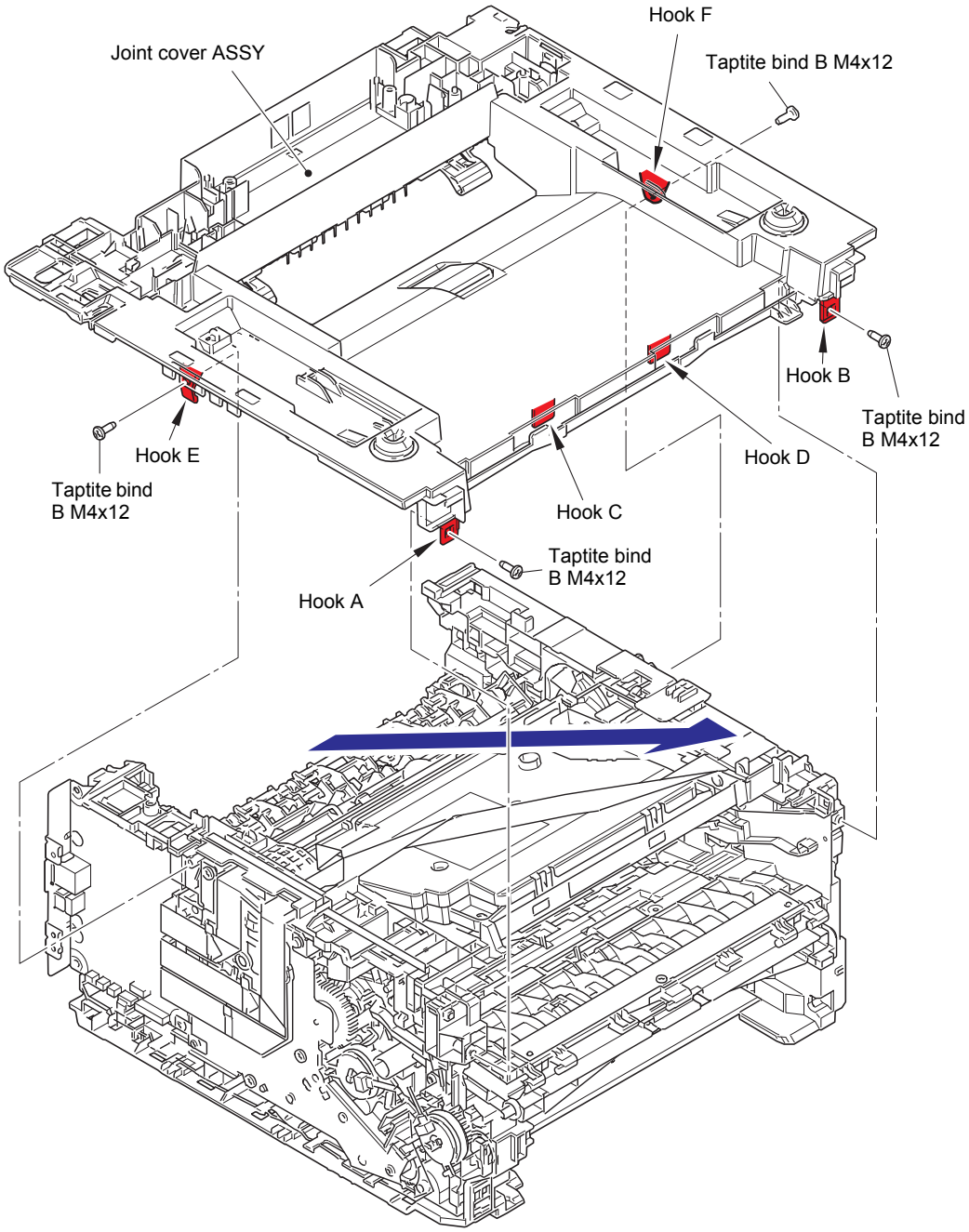

Fig. 3-71

Confidential

9.21 Fuser Unit

(1) Release the fuser unit heater harness from the securing fixtures, and disconnect it from the LVPS-heater harness.

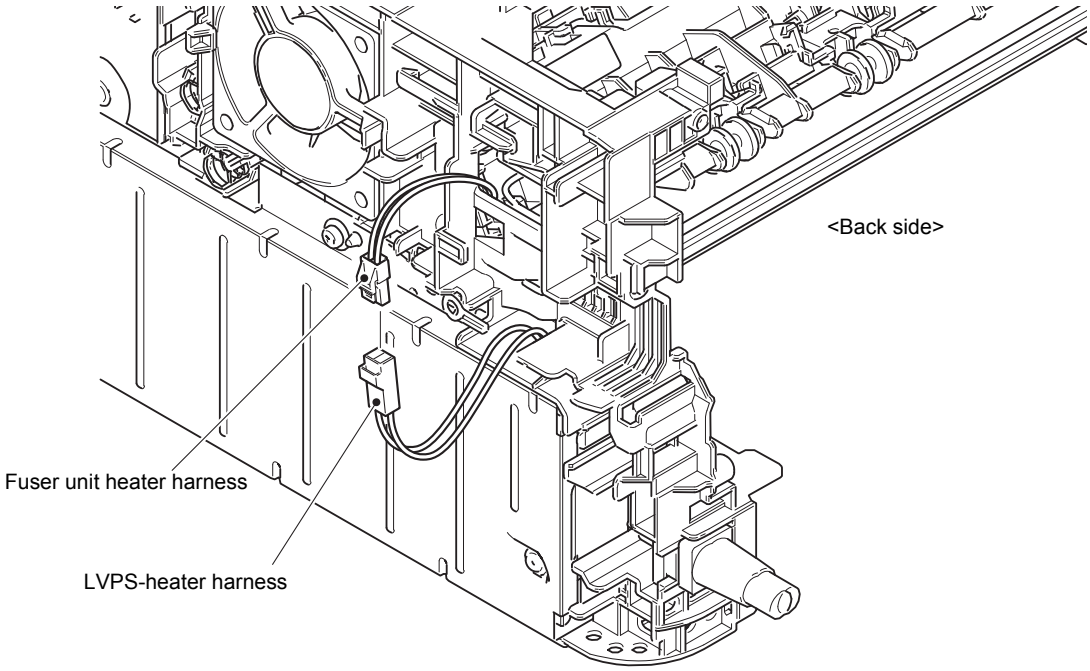

Fig. 3-72

Harness routing: Refer to "4. Rear side of the machine".

(2) Disconnect the center thermistor harness ASSY and the side thermistor harness ASSY from the eject sensor PCB ASSY.

(3) Release the center thermistor harness ASSY and the side thermistor harness ASSY from the securing fixtures.

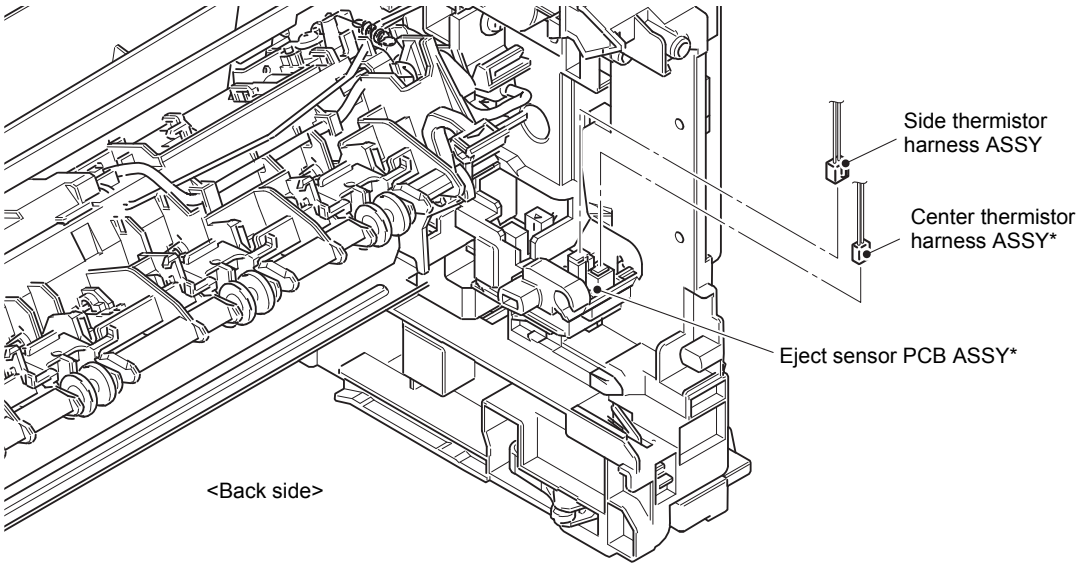

Fig. 3-73

Harness routing: Refer to "4. Rear side of the machine".

Assembling Note:

* Center thermistor has a black and blue connectors. (230V models only)
The black connector may be connected to the blue insertion port and vice versa.

(4) Remove the two taptite pan B M4x14 screws, and remove the fuser unit.

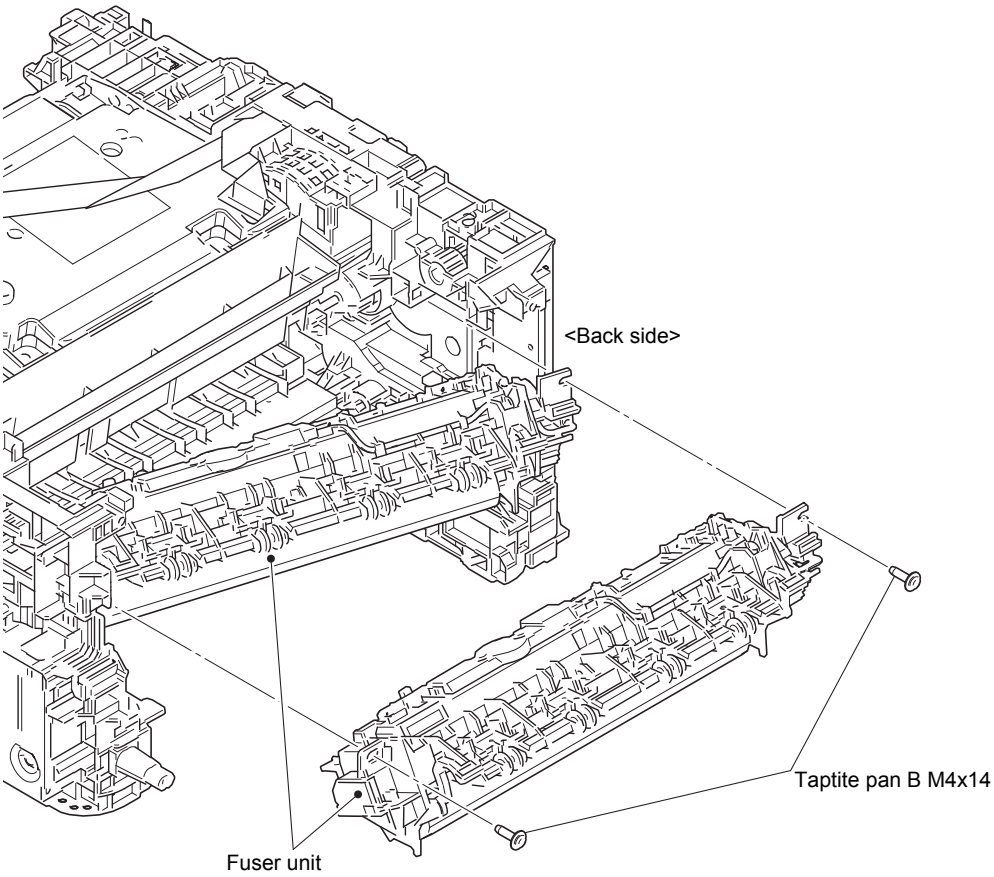

Fig. 3-74

Note:
- DO NOT apply a physical impact or vibration to the fuser unit.
- DO NOT touch the rollers and electrodes to prevent breakage of the fuser unit.

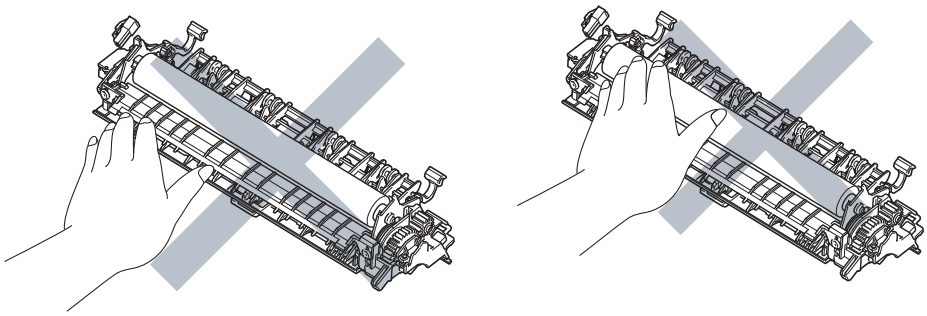

Fig. 3-75

9.22 Low-voltage Power Supply PCB ASSY

(1) Remove the front chute FG spring from the LVPS shield plate cover and the front chute ASSY.

(2) Remove the two taptite cup S M3x8 SR screws and the screw pan (S/P washer) M3.5x6 screw to remove the LVPS shield plate cover and the LVPS insulation sheet.

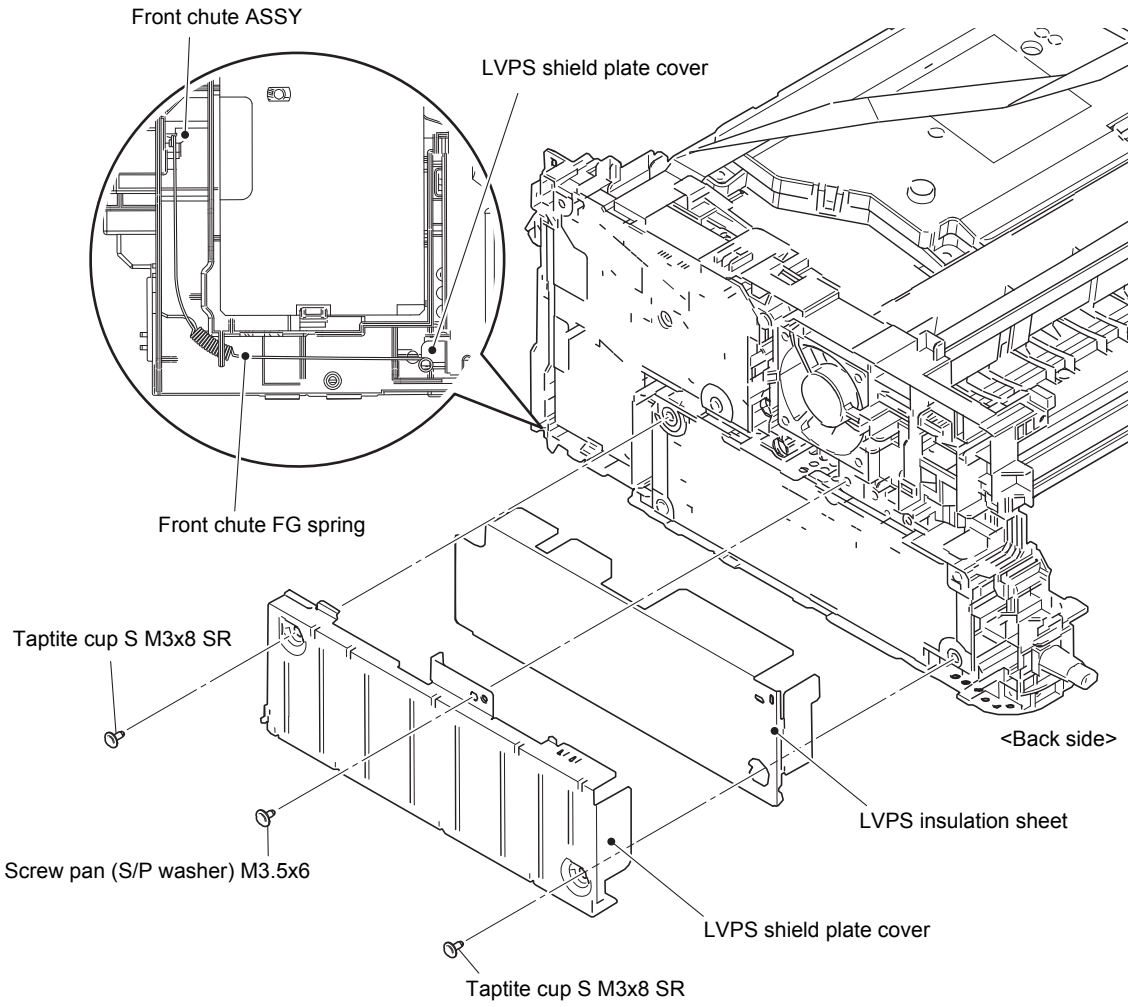

Fig. 3-76

Assembling Note:

- Make sure to attach insulation sheet. Failure to attach the insulation sheet can result in fire or electrical shock.

(3) Remove the screw pan (S/P washer) M3.5x6 screw, and remove the FG harness from the LVPS shield plate.

(4) Release the LVPS-heater harness and the FG harness from the securing fixtures.

(5) Remove the power cord or the inlet from the mounting position. (For models with inlet*, remove the taptite flat B M3x10 screw, and remove the inlet*.)

(6) Remove the two taptite cup S M3x8 SR screws, and remove the low-voltage power supply PCB ASSY. Disconnect the LVPS harness from the back of the low-voltage power supply PCB ASSY.

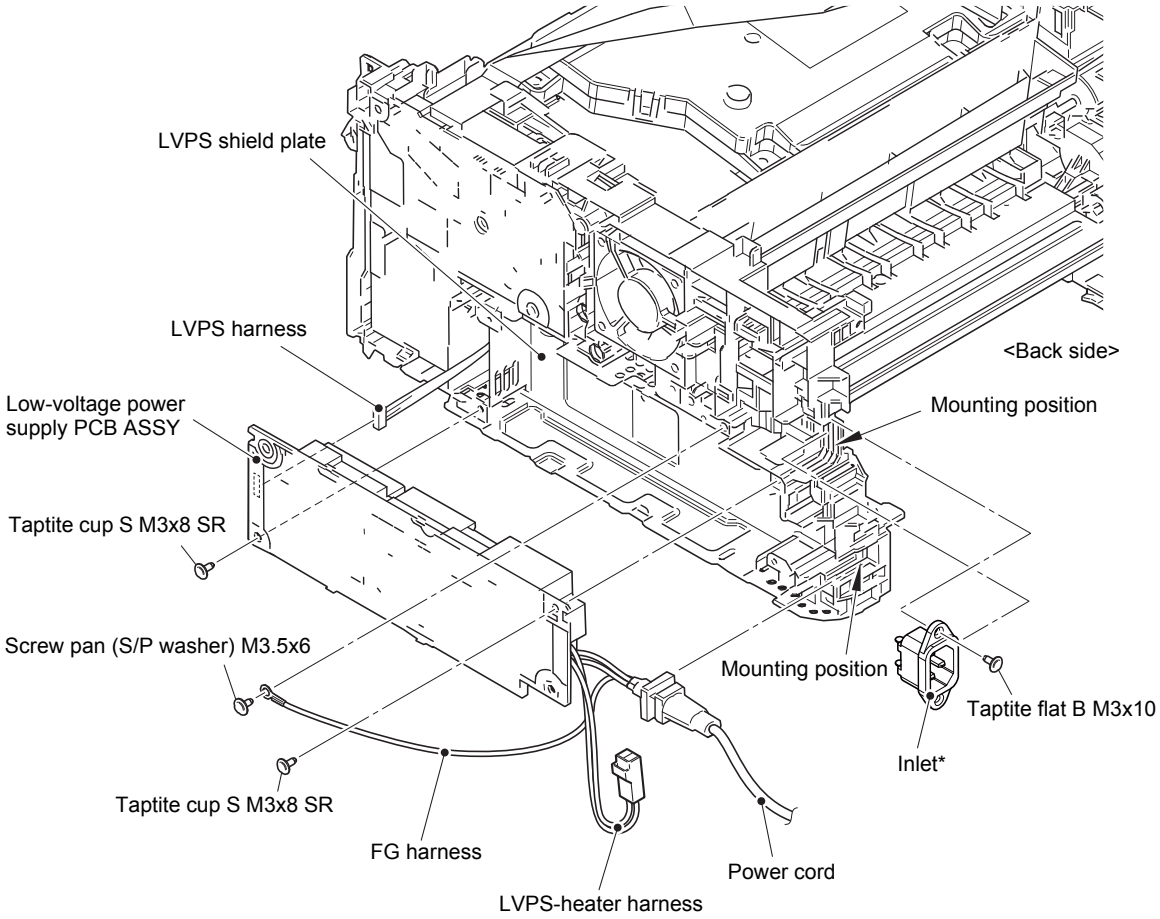

Fig. 3-77

Harness routing: Refer to "4. Rear side of the machine".

Assembling Note:

- After the replacement, refer to "2. IF YOU REPLACE THE LOW-VOLTAGE POWER SUPPLY PCB ASSY" in Chapter 4 to reset irregular power supply detection counter of the low-voltage power supply PCB ASSY.
- Make sure to attach insulation sheet. Failure to attach the insulation sheet can result in fire or electrical shock.

* Models with inlet: Germany/U.K./Switzerland/Italy/Israel/Russia/France/Belgium/ Netherlands/PAN-NORDIC/Iberia/CEE-General/Poland/Argentina/Chile/Peru

9.23 Fan

(1) Disconnect the fan harness from the high-voltage power supply PCB ASSY, and release it from the securing fixtures.

(2) Release each hook to remove the fan, and pull out the fan harness from the hole.

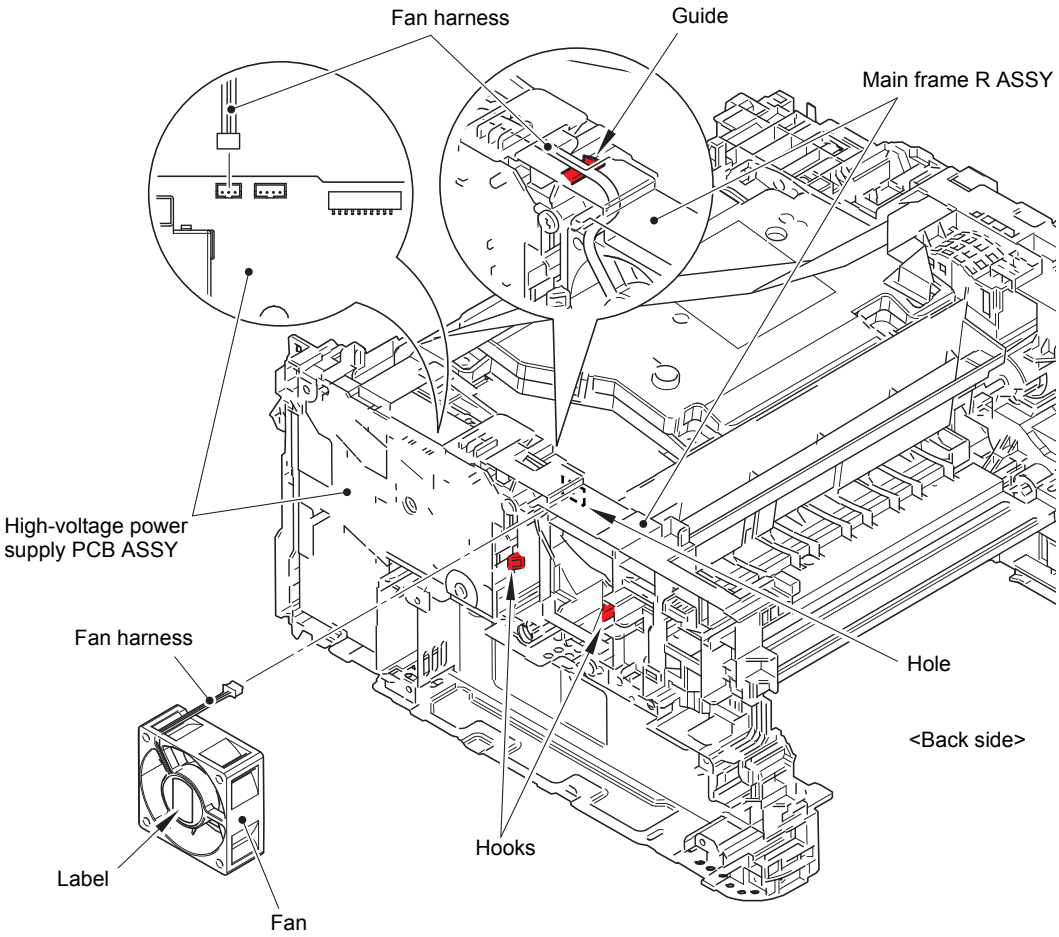

Fig. 3-78

Harness routing: Refer to "4. Rear side of the machine".

Assembling Note:

- When assembling the fan, insert the fan harness into the hole and slip it onto the guide of the main frame R ASSY to make sure that the fan harness is not caught.
- Attach the fan so that the surface with the label faces out.

9.24 High-voltage Power Supply PCB ASSY

(1) Disconnect the HVPS flat cable and the registration front/rear sensor PCB harness from the high-voltage power supply PCB ASSY. Disconnect the HVPS flat cable from the main PCB ASSY, and release it from the securing fixtures.

Note:
- After disconnecting flat cables, check that each cable is not damaged at its end or short-circuited.
- When connecting flat cables, do not insert them at an angle. After insertion, check that the cables are not at an angle.

(2) Remove the taptite cup S M3x8 SR screw. Release the hooks and pull out the right side of the high-voltage power supply PCB ASSY in the direction of the arrow A to remove it from the pins. Then pull out the high-voltage power supply PCB ASSY in the direction of the arrow B to remove it from the rib.

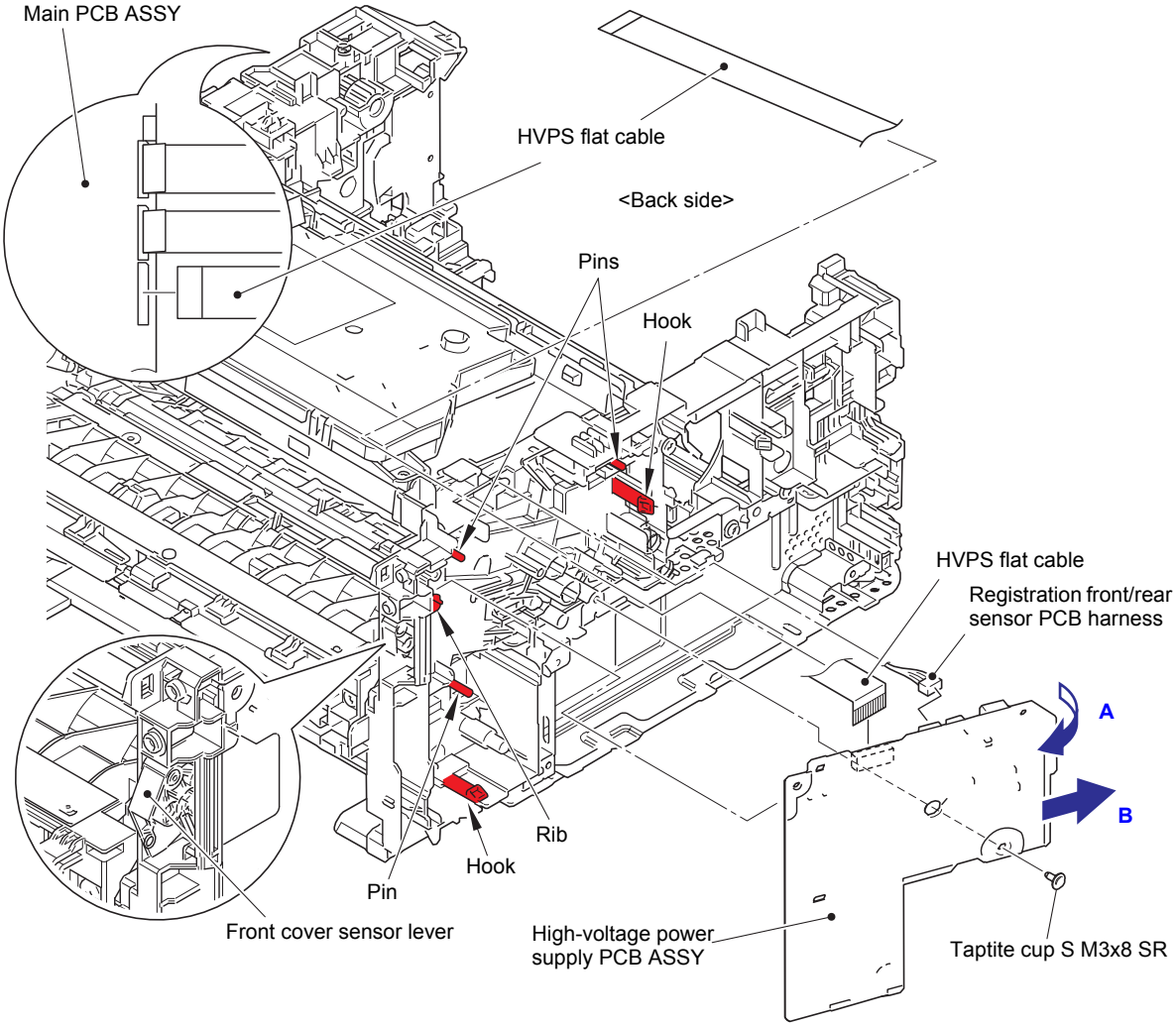

Fig. 3-79

Harness routing: Refer to "1. Right side of the machine", "4. Rear side of the machine".

Assembling Note:
- After attaching the high-voltage power supply PCB ASSY, push electrode springs from inside of the machine to check that the nothing is caught. (Refer to Fig. 2-9.)
- When attaching the high-voltage power supply PCB ASSY, check that the front cover sensor lever is on the position in the figure above (jutted forward).

Assembling Note:

- Fold the HVPS flat cable at the positions described below.

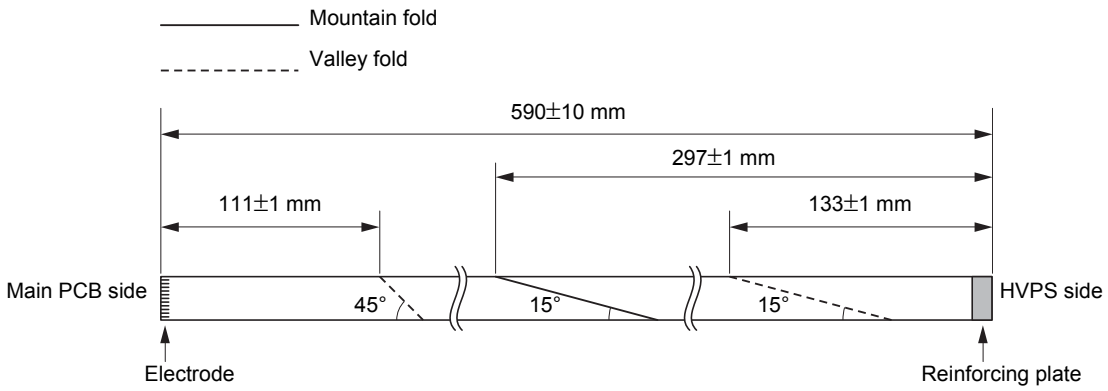

Fig. 3-80

Assembling Note:

- Attach the flat cable sponge to the location shown in the figure below.

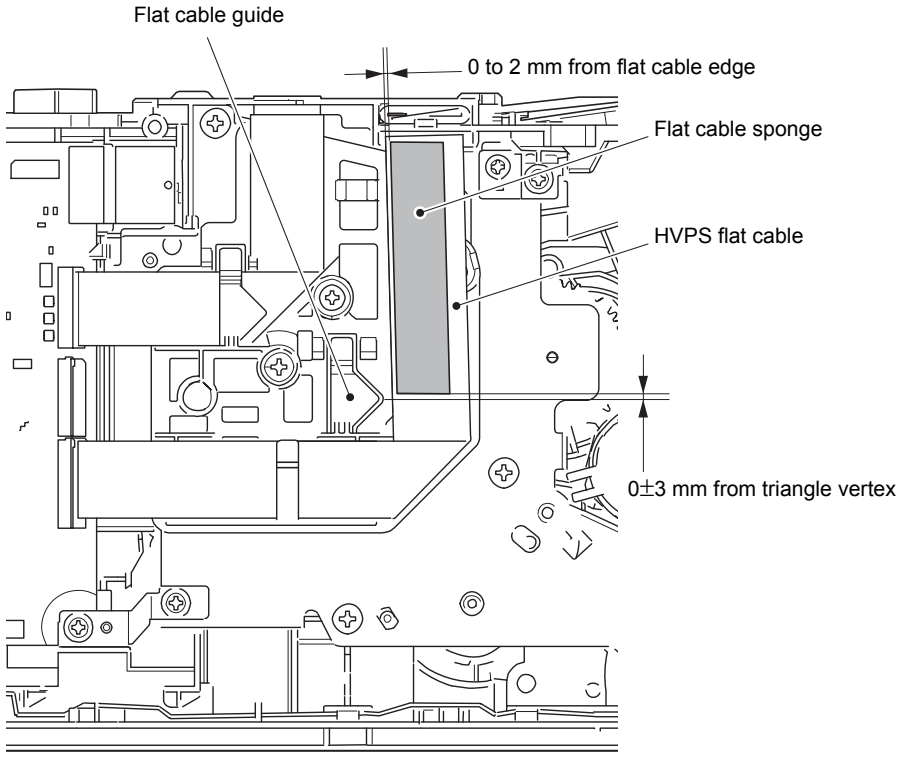

Fig. 3-81

Confidential

9.25 Filter

(1) Release each hook to remove the air duct.

(2) Pull out the rib on the air duct in the direction of the arrow, and remove the filter.

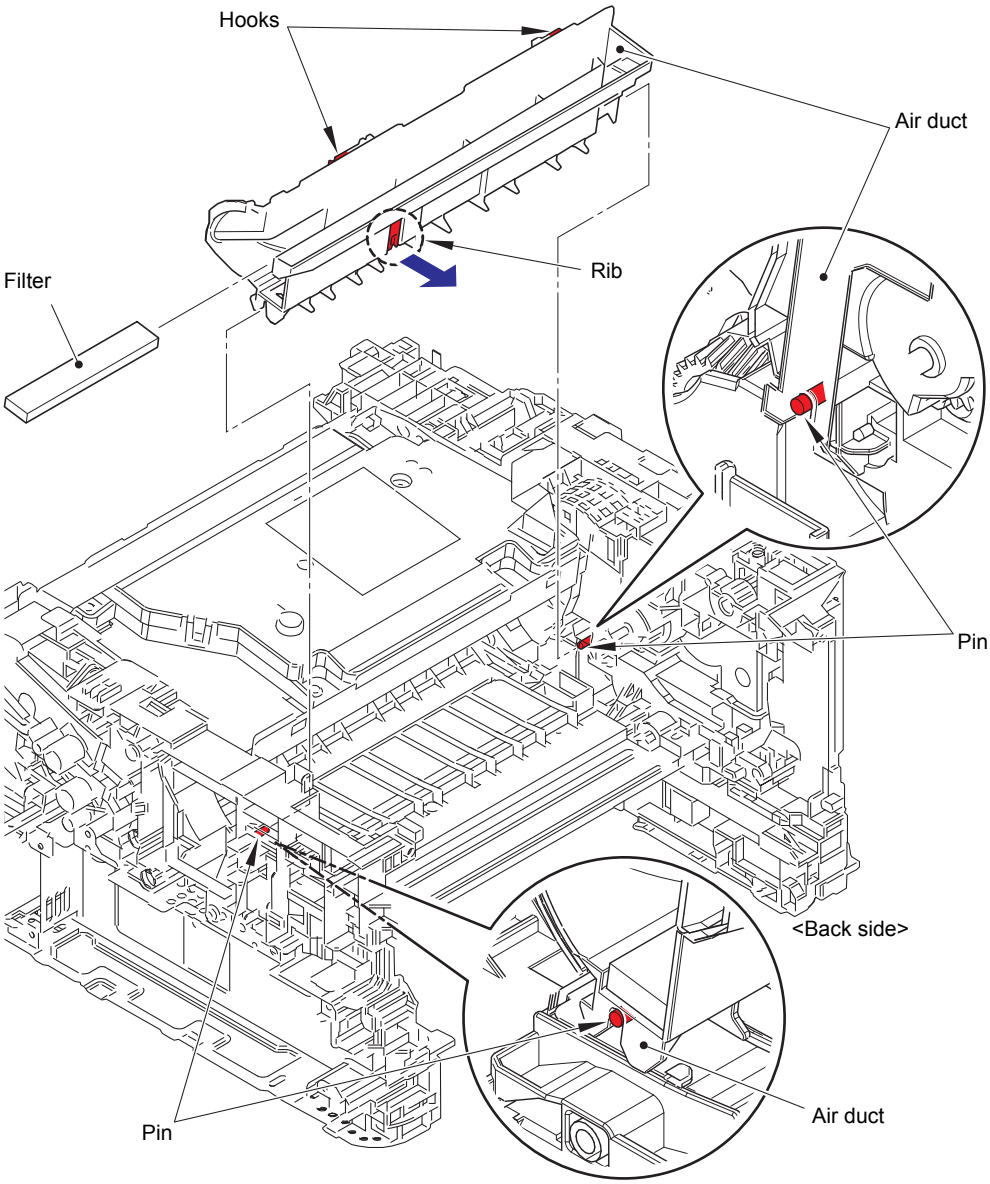

Fig. 3-82

Assembling Note:

- When attaching the air duct, engage the notches on the air duct with the pins.

Confidential

9.26 Laser Unit

(1) Disconnect the laser unit flat cable from the main PCB ASSY and the laser unit, and release it from the securing fixtures.

Note:
- After disconnecting flat cables, check that each cable is not damaged at its end or short-circuited.
- When connecting flat cables, do not insert them at an angle. After insertion, check that the cables are not at an angle.

(2) Remove the four taptite cup S M3x8 SR screws, and remove the laser unit.

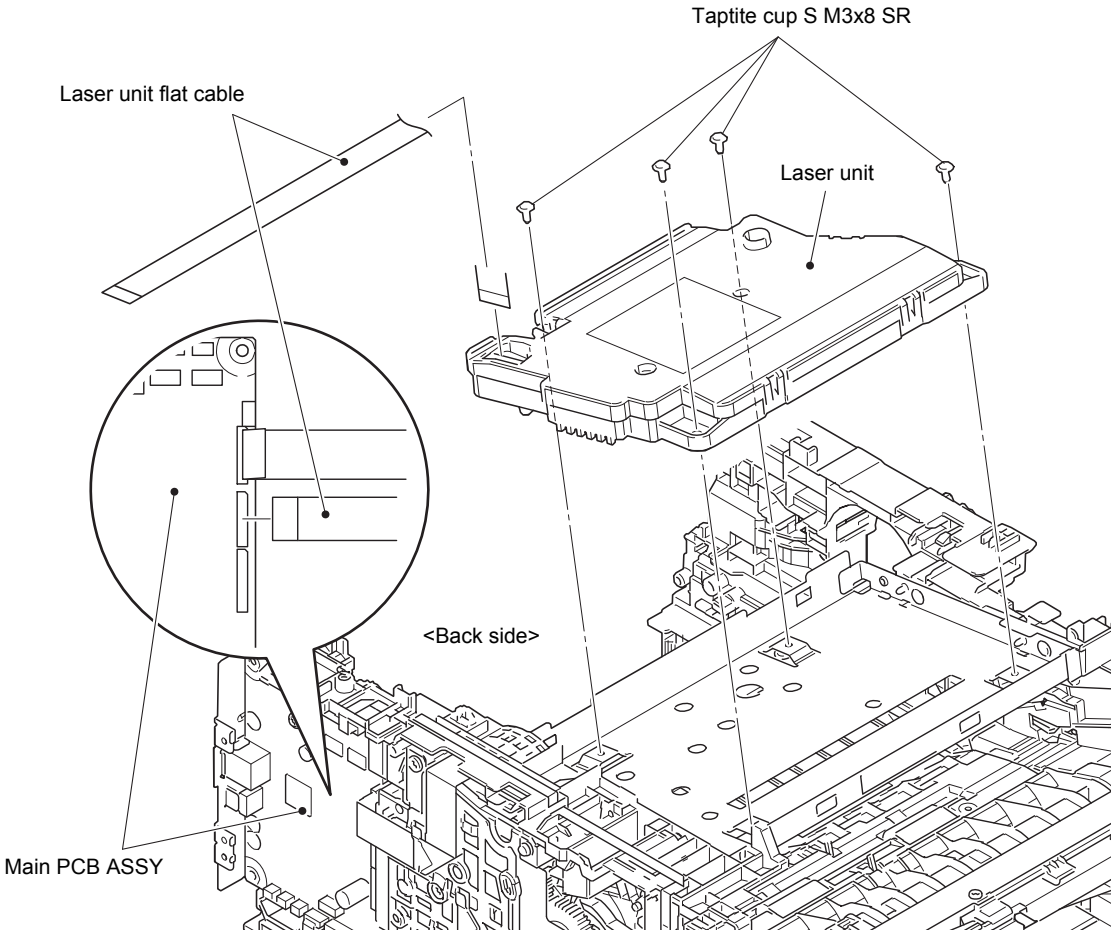

Fig. 3-83

Harness routing: Refer to “3. Left side of the machine”, “4. Rear side of the machine”.

Assembling Note:

- Fold the laser unit flat cable at the positions described below.

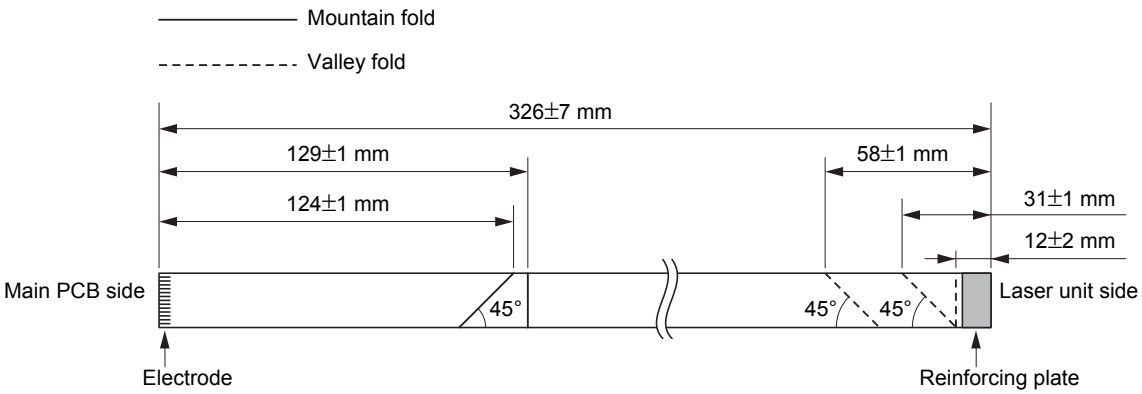

Fig. 3-84

Assembling Note:

- There are two types of laser unit (SP / SN) that can be ordered as a spare part. When replacing the laser unit, be sure to order the same type of the laser unit that was attached to the machine.
- After the replacement, refer to "3. IF YOU REPLACE THE LASER UNIT" in Chapter 4 to enter the adjusted value of the laser unit.

<How to identify the type of laser unit and the position of the laser serial number label>

Check the first two characters of the laser serial number label.

- SP type: SPxxxxxxVXXYY
- SN type: SNxxxxxxVXXYY

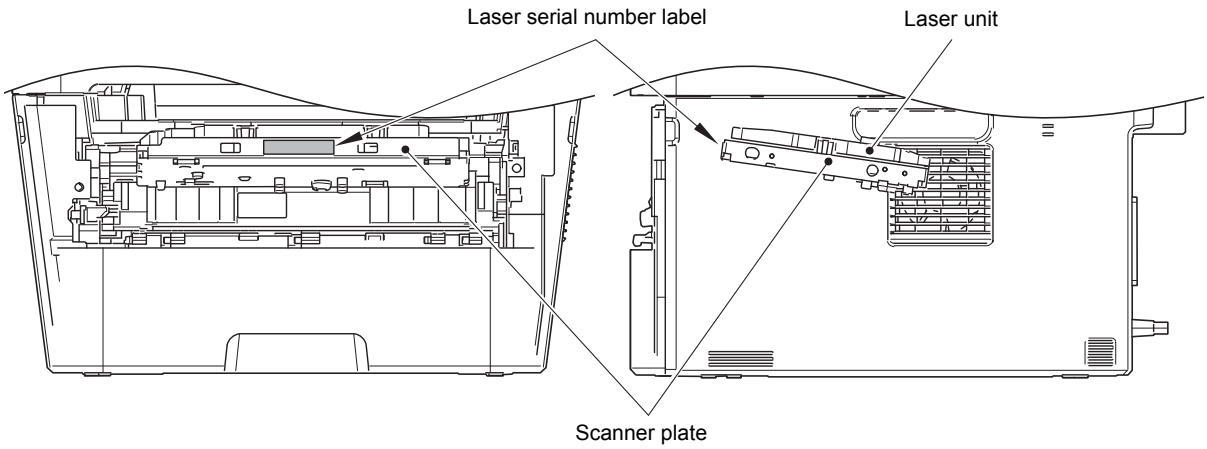

Fig. 3-85

Assembling Note:

- Attach the laser serial number label as shown in the figure above (on the scanner plate) after replacing the laser unit.

9.27 Wireless LAN PCB (Wireless network models only)

(1) Remove the tape on the wireless LAN PCB, and disconnect the wireless LAN PCB from the main PCB ASSY.

(2) Remove the gasket from the wireless LAN PCB.

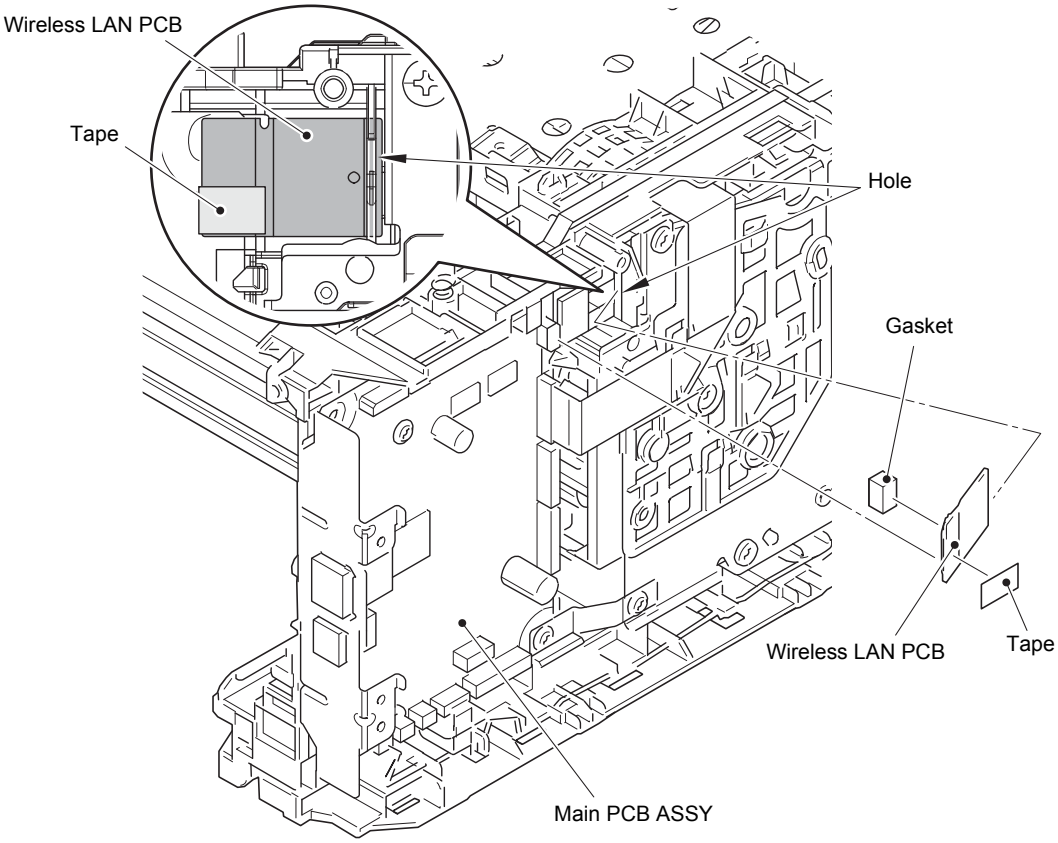

Fig. 3-86

Assembling Note:

- When connecting the wireless LAN PCB, insert the wireless LAN PCB to the hole on the machine, and connect the wireless LAN PCB to the main PCB ASSY.
- When assembling the wireless LAN PCB, remove the all tapes on the wireless LAN PCB. Also, do not attach a tape. These tapes are for securing the wireless LAN PCB during the shipping, not required for usage. These tapes are special tape and using other tapes may cause short circuit between terminals.
- Attach the gasket to the location shown in the figure below.

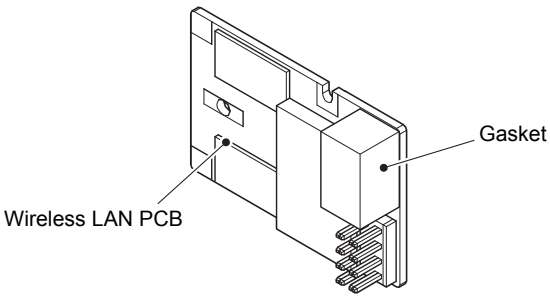

Fig. 3-87

9.28 Roller Holder ASSY

(1) Push the link arm in the direction of the arrow A. Rotate the roller holder ASSY, and release the boss.

(2) Slide the roller holder ASSY in the direction of the arrow B, and remove it from the shaft. Remove the roller holder ASSY.

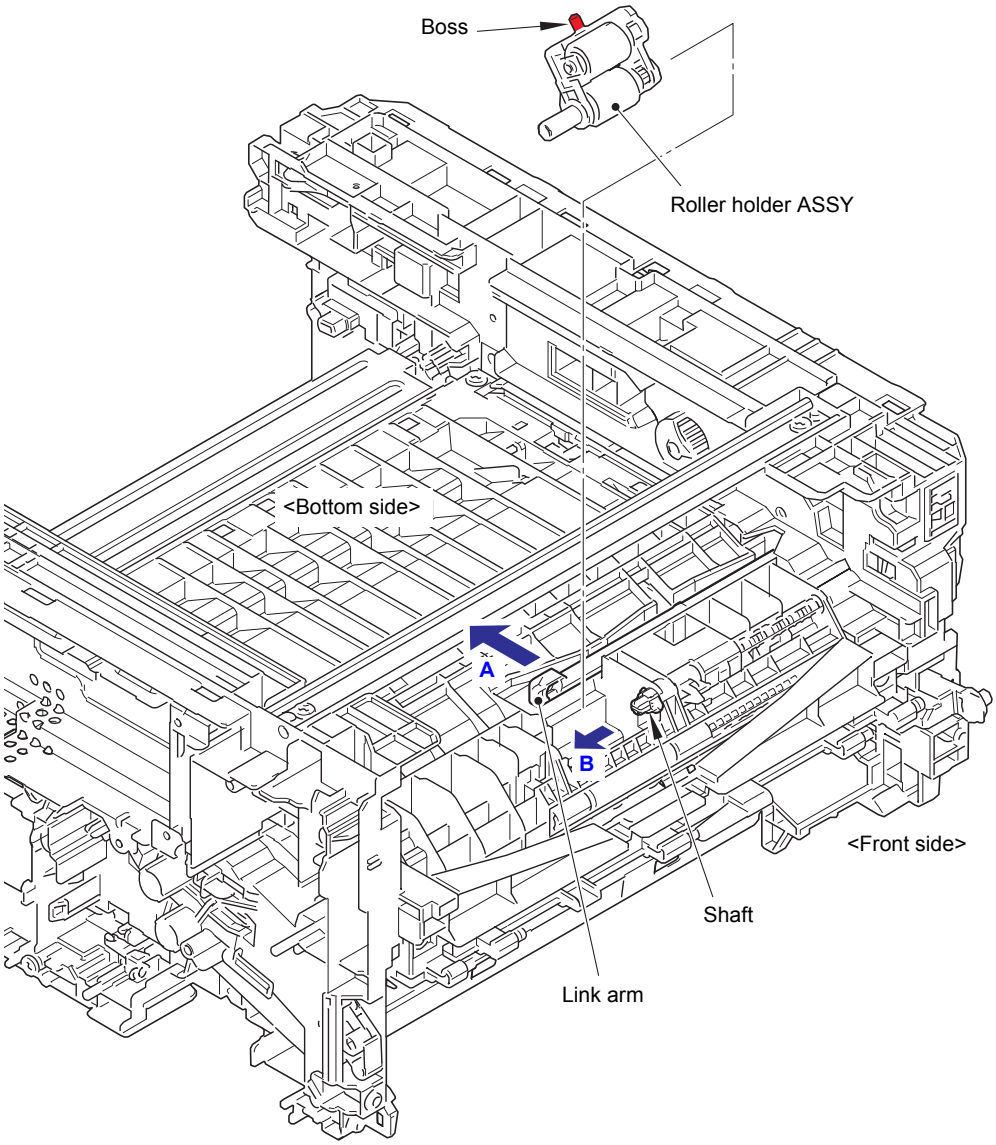

Fig. 3-88

9.29 Main PCB ASSY

(1) Disconnect all harnesses and flat cables from the main PCB ASSY.

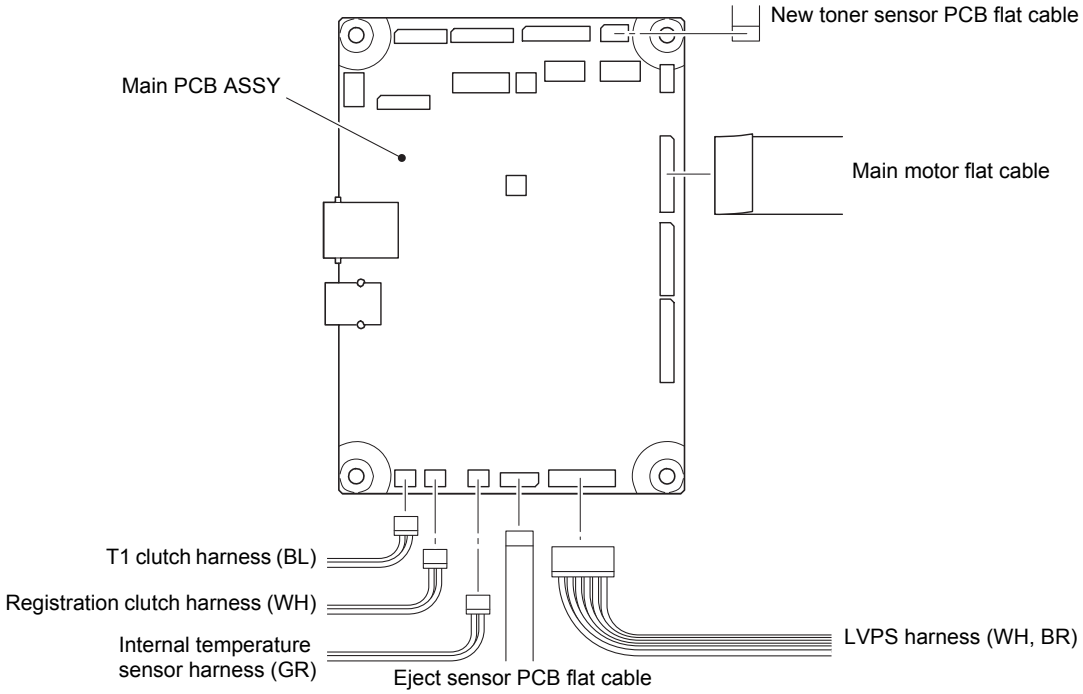

Fig. 3-89

Harness routing: Refer to "3. Left side of the machine".

(2) Remove the two taptite cup S M3x8 SR screws, and remove the main PCB FG plate 1.

(3) Remove the three taptite cup S M3x8 SR screws. Release the hook, and remove the main PCB ASSY.

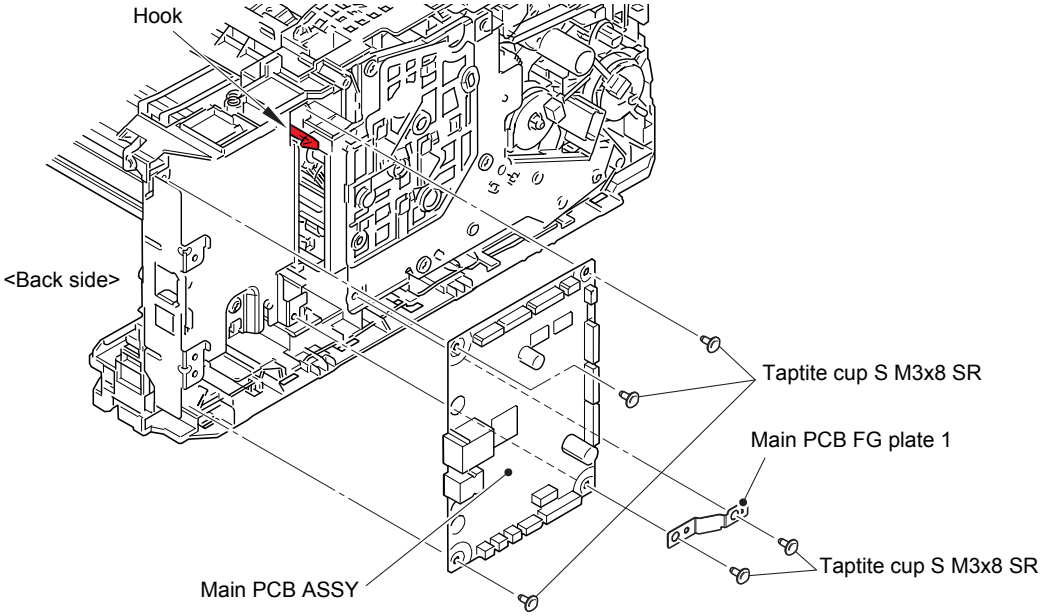

Fig. 3-90

Assembling Note:

- After the replacement, refer to "1. IF YOU REPLACE THE MAIN PCB ASSY" in Chapter 4 to enter the adjusted value of the main PCB ASSY.

9.30 T1 Clutch and Registration Clutch

(1) Release the T1 clutch harness (BL) and the registration clutch harness (WH) from the securing fixtures.

(2) Release the hook, and remove the T1 clutch.

(3) Release the hook, and remove the registration clutch.

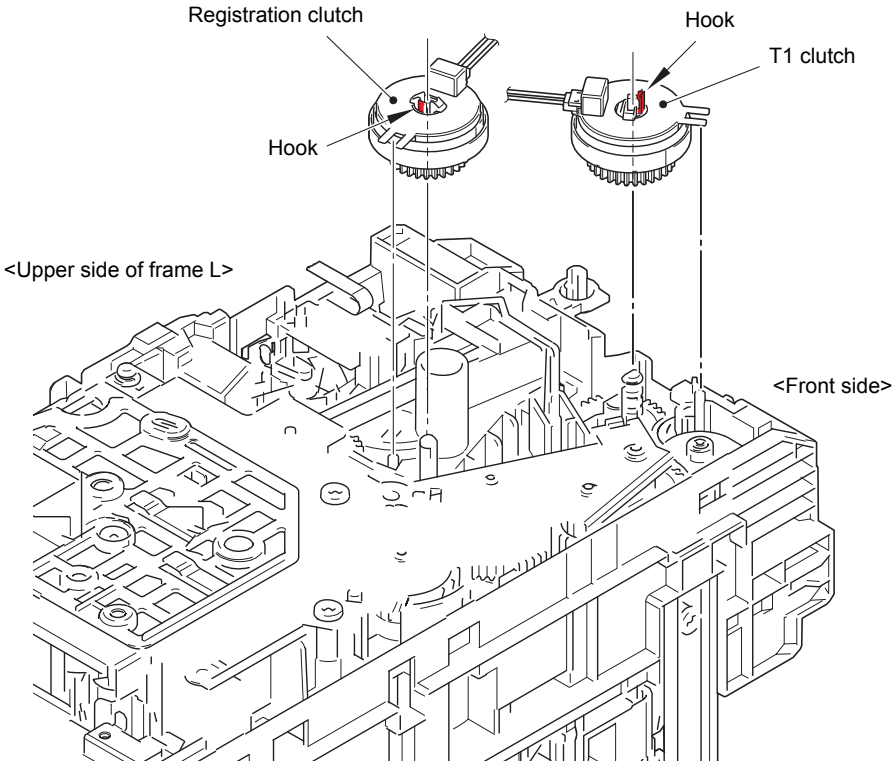

Fig. 3-91

Harness routing: Refer to "3. Left side of the machine".

Assembling Note:

- When securing the T1 clutch harness and the registration clutch harness, check that there is no harness slack.
- Attach the rotation stoppers of the T1 clutch and registration clutch by engaging them with the pins of the machine as shown in the figure below.

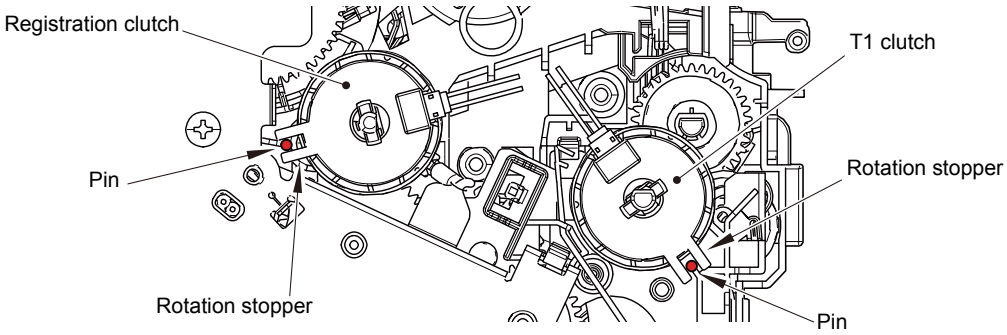

Fig. 3-92

9.31 New Toner Sensor PCB ASSY

(1) Release the new toner sensor PCB flat cable from the securing fixture.

(2) Release the hook, and remove the new toner sensor PCB ASSY. Disconnect the paper feed sensor harness ASSY from the new toner sensor PCB ASSY, and release it from the securing fixtures.

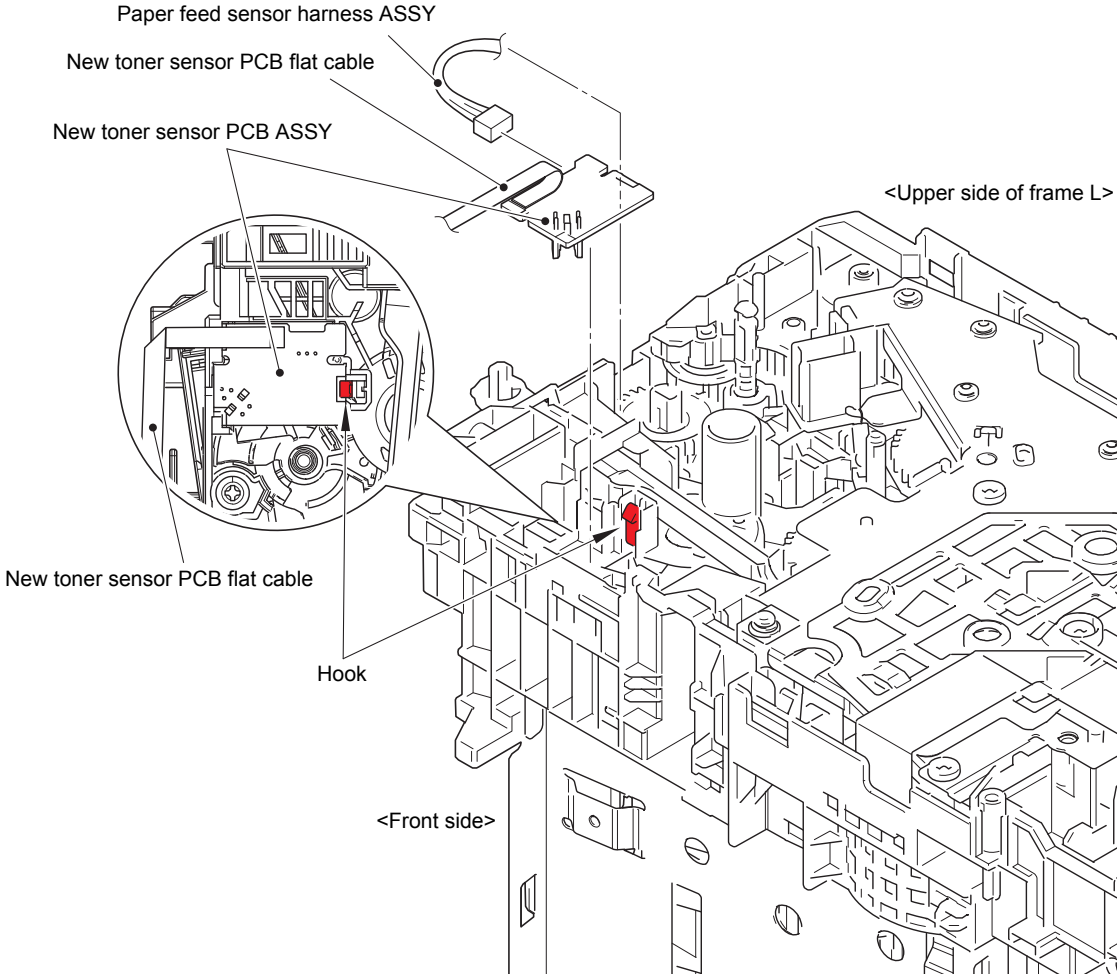

Fig. 3-93

Harness routing: Refer to "3. Left side of the machine", "5. New toner sensor PCB ASSY".

9.32 Main Frame L ASSY

(1) Remove the two taptite bind B M4x12 screws, and remove the front chute ASSY.

(2) Release the LVPS harness from the securing fixtures.

(3) Remove the regist FG spring from the motor drive sub ASSY and the conductive bushing 5.

(4) Use a flat-blade screwdriver or similar tool to release the hook from the hole, and remove the conductive bushing 5.

(5) Release the hook, and remove the feeder gear 34.

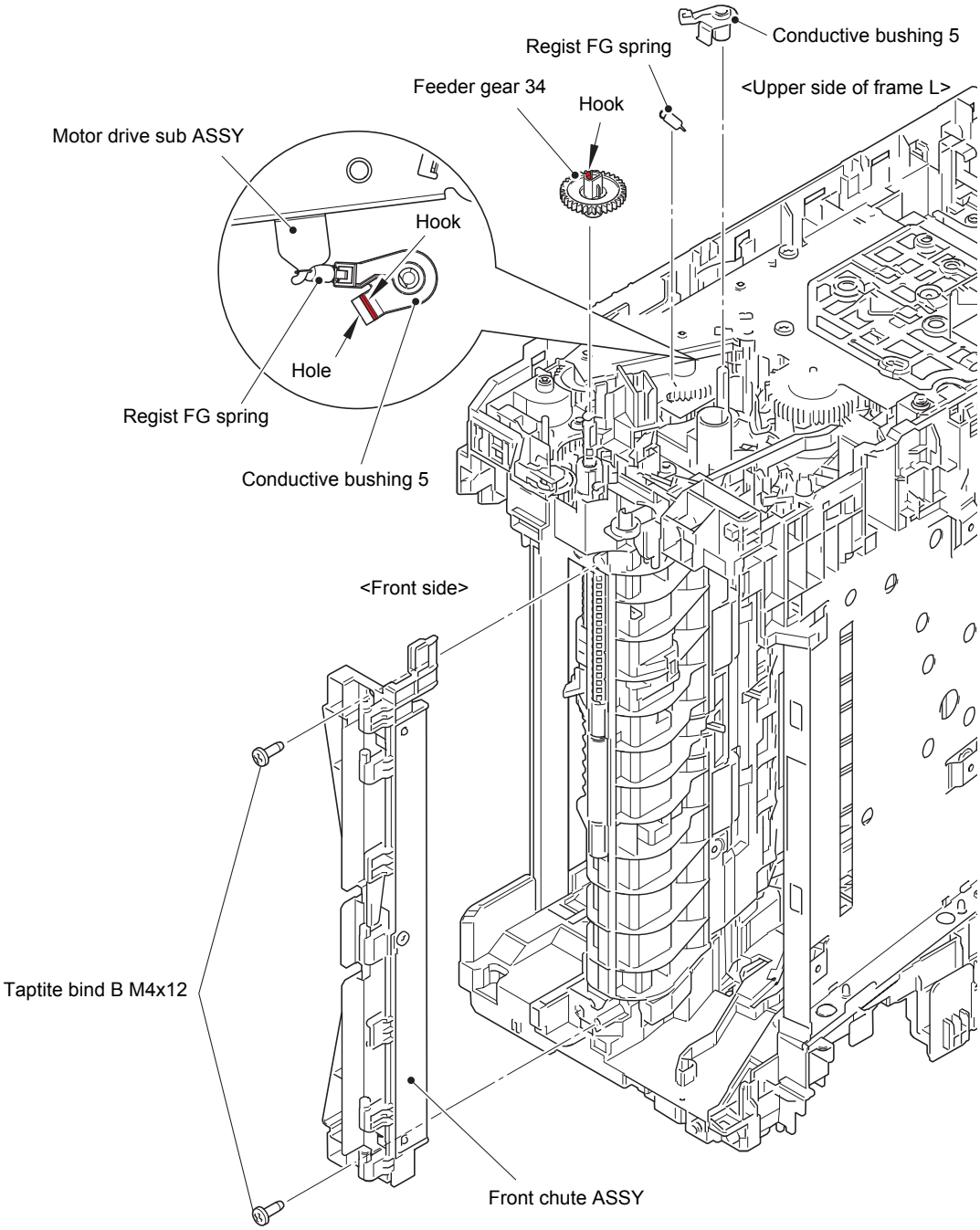

Fig. 3-94

Harness routing: Refer to "3. Left side of the machine".

(6) Remove the taptite bind B M4x12 (6a) screw (for securing the under bar), the taptite cup S M3x6 SR (6b) screw (for securing the chute ground plate), the taptite bind B M4x12 (6c) screw (for securing the registration chute) and the taptite cup S M3x8 SR (6d) screw (for securing the laser L FG plate).

(7) Remove the two taptite bind B M4x12 (7a) screws and the two taptite cup S M3x8 SR (7b) screws, and remove the main frame L ASSY. Pull out the paper feed sensor harness ASSY and the LVPS harness from the holes.

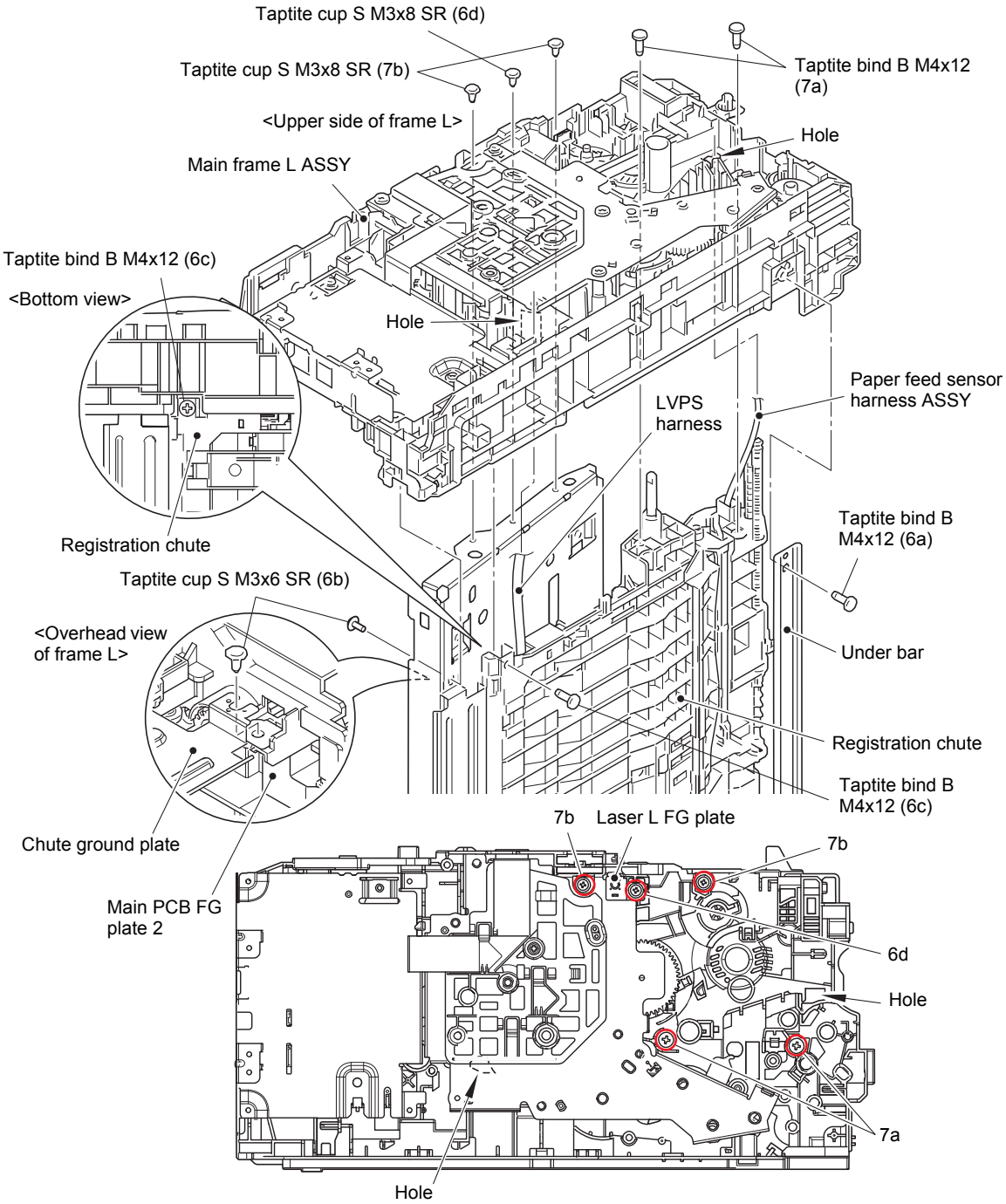

Fig. 3-95

Harness routing: Refer to "3. Left side of the machine".

Assembling Note:

- When assembling the main frame L ASSY, make sure that the chute ground plate is above the main PCB FG plate 2.

9.33 Main Motor

(1) Release the main motor flat cable from the securing fixtures.

(2) Remove the taptite bind B M4x12 screw. Release the hook A, and remove the flat cable guide from the motor drive sub ASSY.

(3) Remove the screw pan (S/P washer) M3x12DB screw, and remove the laser L FG plate from the motor drive sub ASSY.

(4) Remove the three taptite bind B M4x12 screws. Release the hook B to remove the motor drive sub ASSY from the main frame L ASSY.

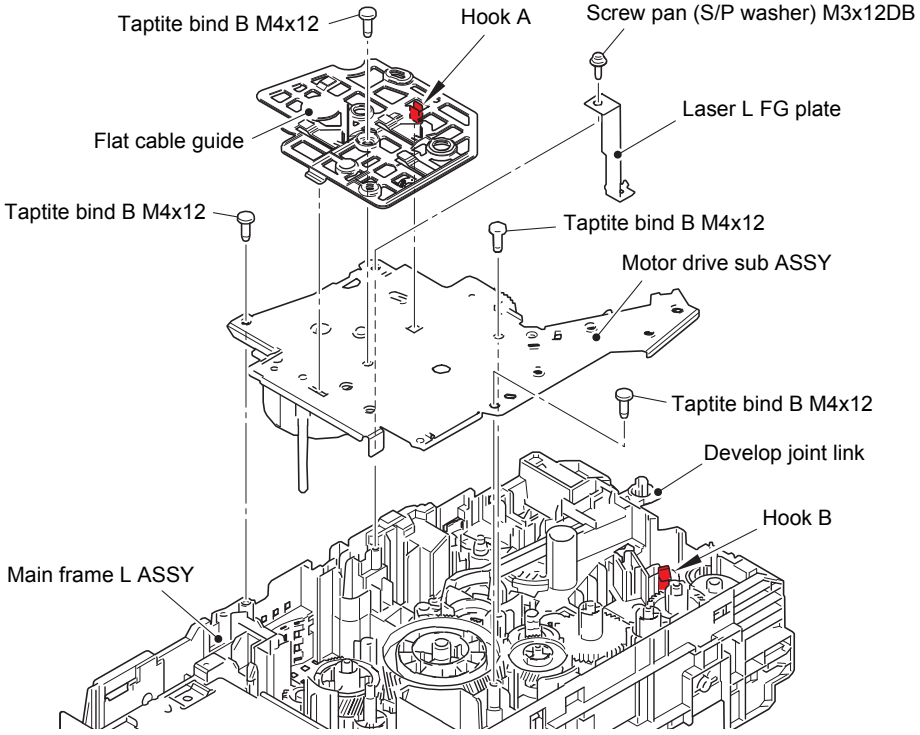

Fig. 3-96

Harness routing: Refer to "3. Left side of the machine".

Assembling Note:

- Be careful not to bend the laser L FG plate.
- Attach the motor drive sub ASSY to the main frame L ASSY while the develop joint link is pushed. Pull the develop joint link back before tightening the screw for motor drive sub ASSY. Failure to follow the procedure above may get the develop joint link caught and jammed.
- If you removed the motor drive sub ASSY while the fuser unit was attached on the machine, remove the fuser unit once (refer to "9.21 Fuser Unit") and reattach it after attaching the motor drive sub ASSY.
  The conductive leaf spring of the fuser unit may be deformed by the calking shaft.

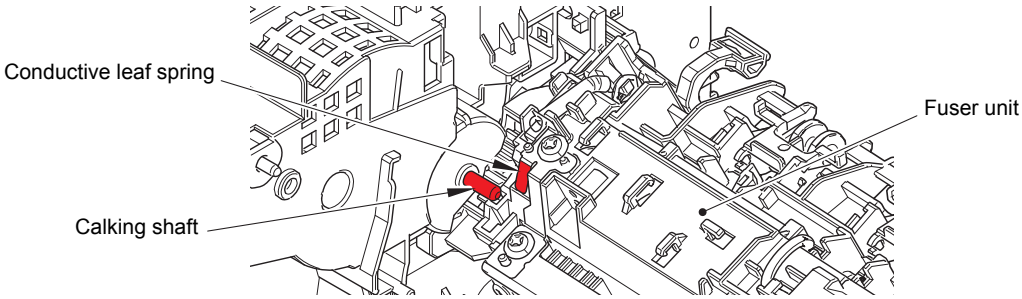

Fig. 3-97

(5) Remove the taptite cup S M3x8 SR screw to remove the motor plate calking ASSY and the drum idle gear 68R from the motor drive sub ASSY.

(6) Remove the three screw bind M3x4 screws to remove the main motor from the motor plate calking ASSY.

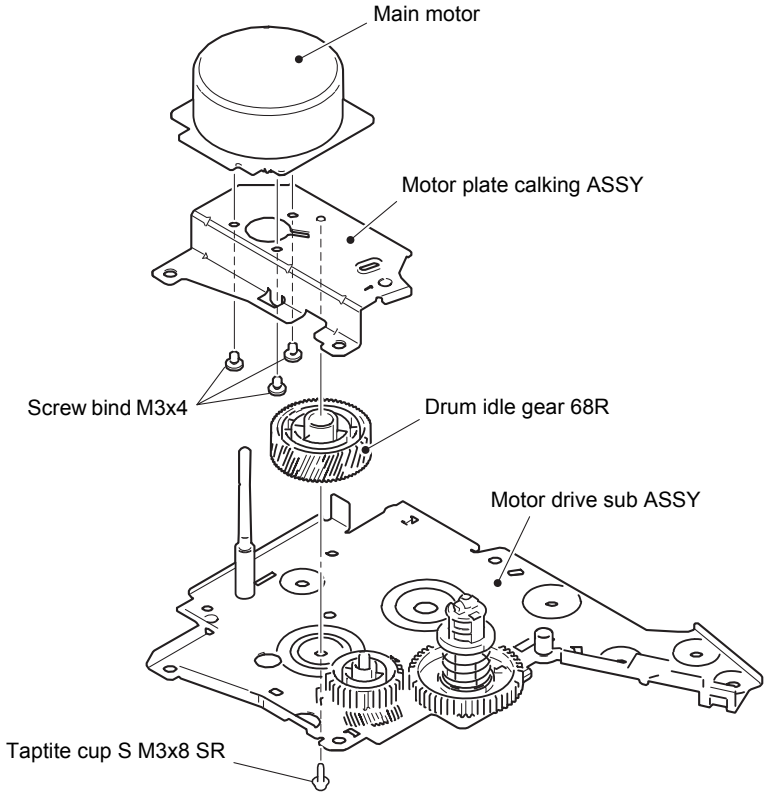

Fig. 3-98

Assembling Note:

- When assembling the motor plate calking ASSY, set the drum idle gear 68R and the develop gear 65L/34 to the motor plate calking ASSY as shown in the figure below, and then attach it to the motor drive sub ASSY.

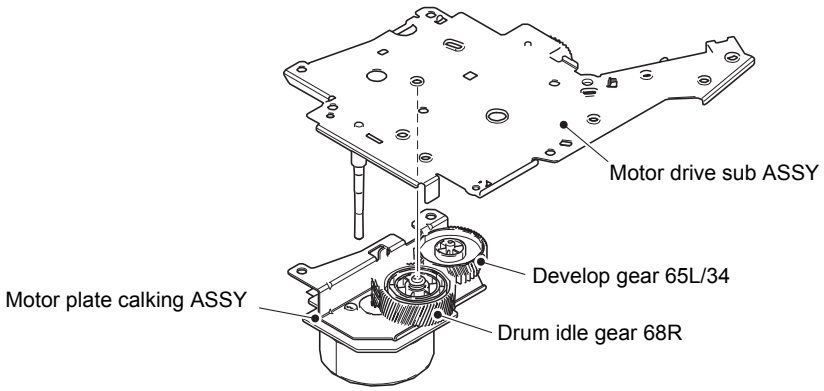

Fig. 3-99

9.34 Fuser Gear 67R/40R

(1) Remove the fuser gear 67R/40R from the main frame L ASSY.

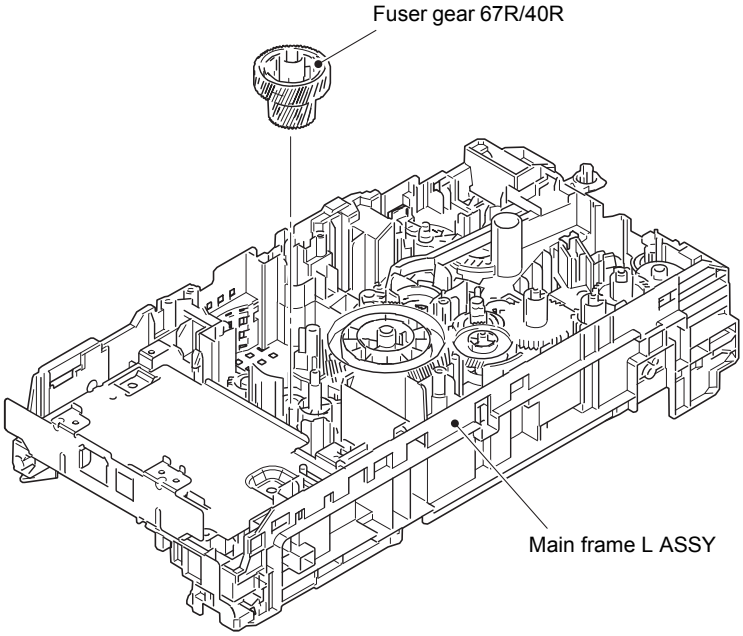

Fig. 3-100

Confidential

9.35 Eject Sensor PCB ASSY

(1) Remove the taptite cup S M3x8 SR screw and the screw pan (S/P washer) M3x12DB screw. Lift the upper side of the main shield plate up to remove it from the pin, and pull out the main shield plate in the direction of the arrow to remove it from the rib of the main frame L ASSY.

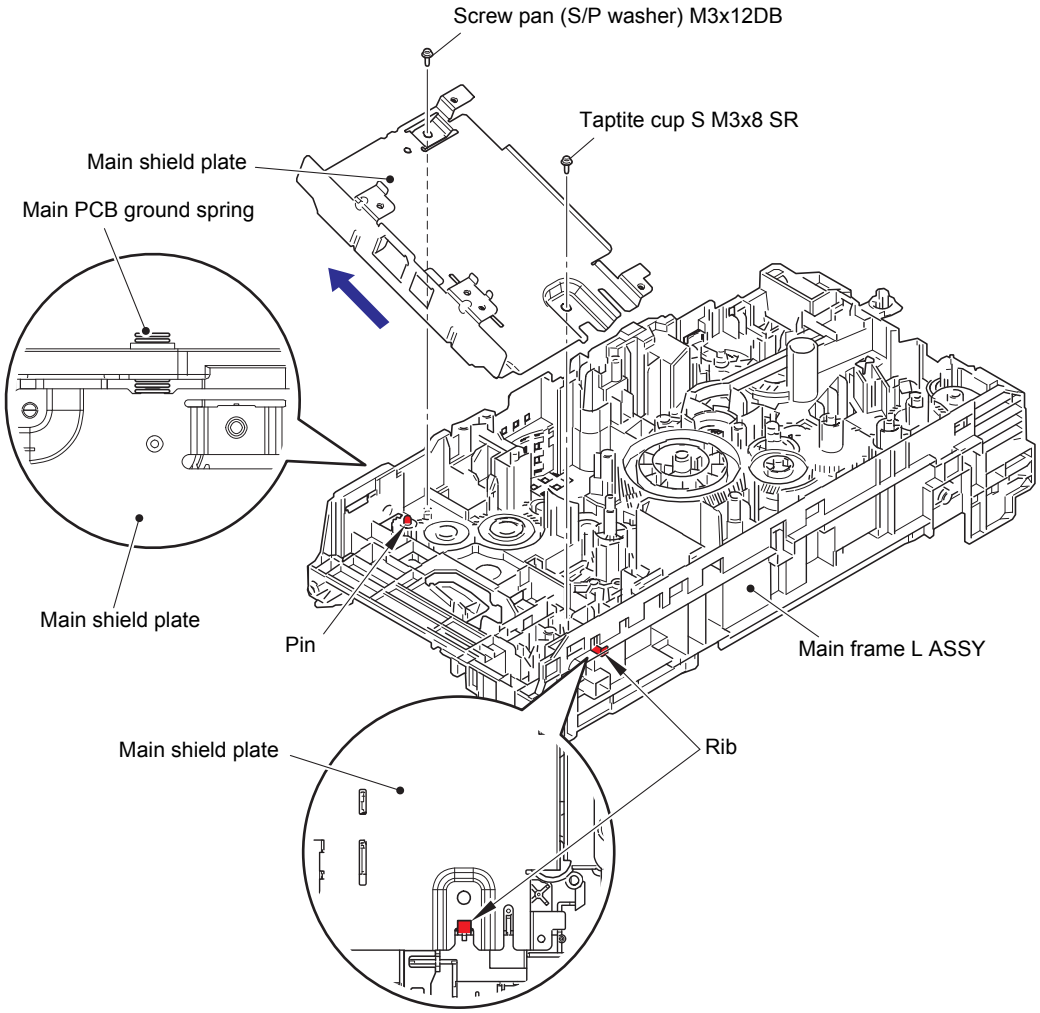

Fig. 3-101

Assembling Note:

- When assembling the main shield plate, check that the main PCB ground spring is not inclined. Attach it correctly as shown in the figure above.

(2) Release the hook A, and remove the eject sensor PCB ASSY from the pin on the main frame L ASSY.

(3) Release the back cover/duplex tray sensor harness from the guide on the main frame L ASSY.

(4) Release the hooks B, and remove the back cover/duplex tray sensor from the main frame L ASSY.

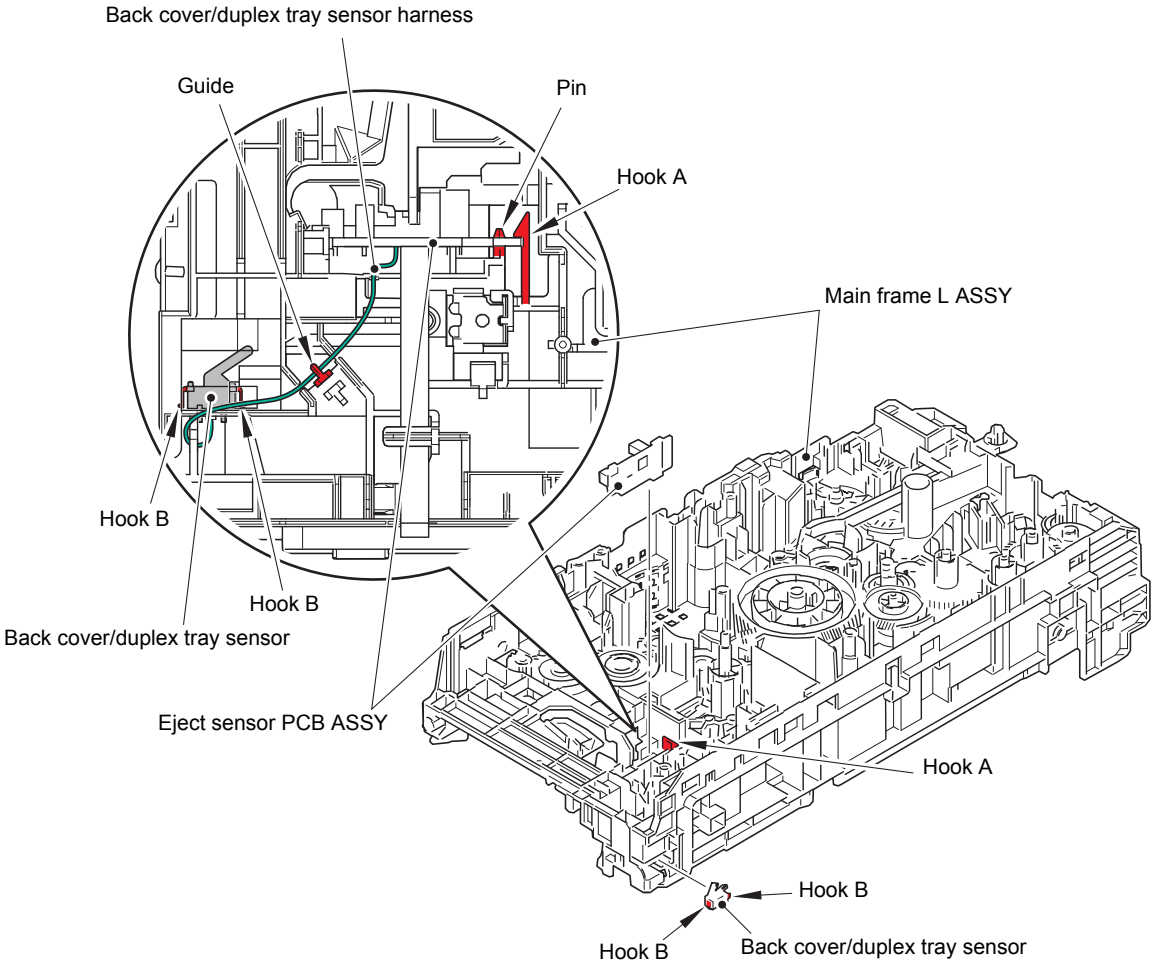

Fig. 3-102

Assembling Note:

- When assembling the back cover/duplex tray sensor, attach it by engaging the hooks B of the back cover/duplex tray sensor properly.
- If you removed the main shield plate while the fuser unit was attached on the machine, release the side thermistor harness ASSY and the center thermistor harness ASSY from the securing fixture of the main frame L ASSY. Then tighten the screw for the main shield plate and secure each harness in the securing fixture. If the main shield plate is assembled while the fuser unit is attached to the machine, the side thermistor harness ASSY and the center thermistor harness ASSY may be caught.

9.36 Registration Front/Rear Actuator Holder ASSY

Note:

- As the under bar is easy to bend, be careful to handle it.

(1) Release the hook part of the under R FG wire from the LVPS shield plate.

(2) Remove the taptite cup S M3x8 SR screw, and remove the laser R FG plate.

(3) Remove the taptite cup S M3x8 SR screw and the taptite bind B M4x12 screw. Pull out the right side of the LVPS shield plate in the direction of the arrow A to remove it from the pin. Then pull it out in the direction of the arrow B to remove it from the machine.

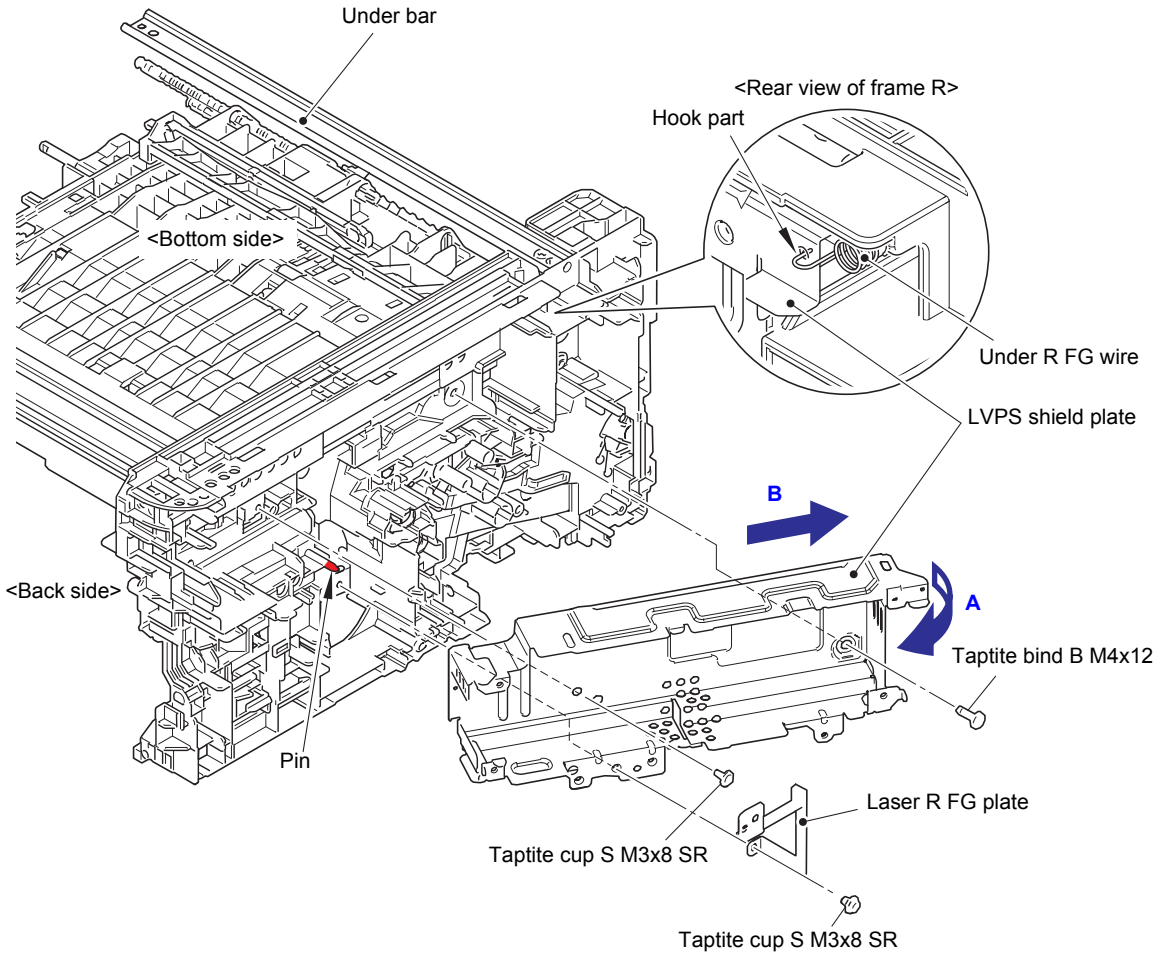

Fig. 3-103

(4) Release the registration front/rear sensor PCB harness and the LVPS harness from the securing fixtures.

(5) Remove the taptite cup S M3x6 SR screw and the two taptite bind B M4x12 screws, and remove the main frame R ASSY. Pull out the registration front/rear sensor PCB harness from the hole.

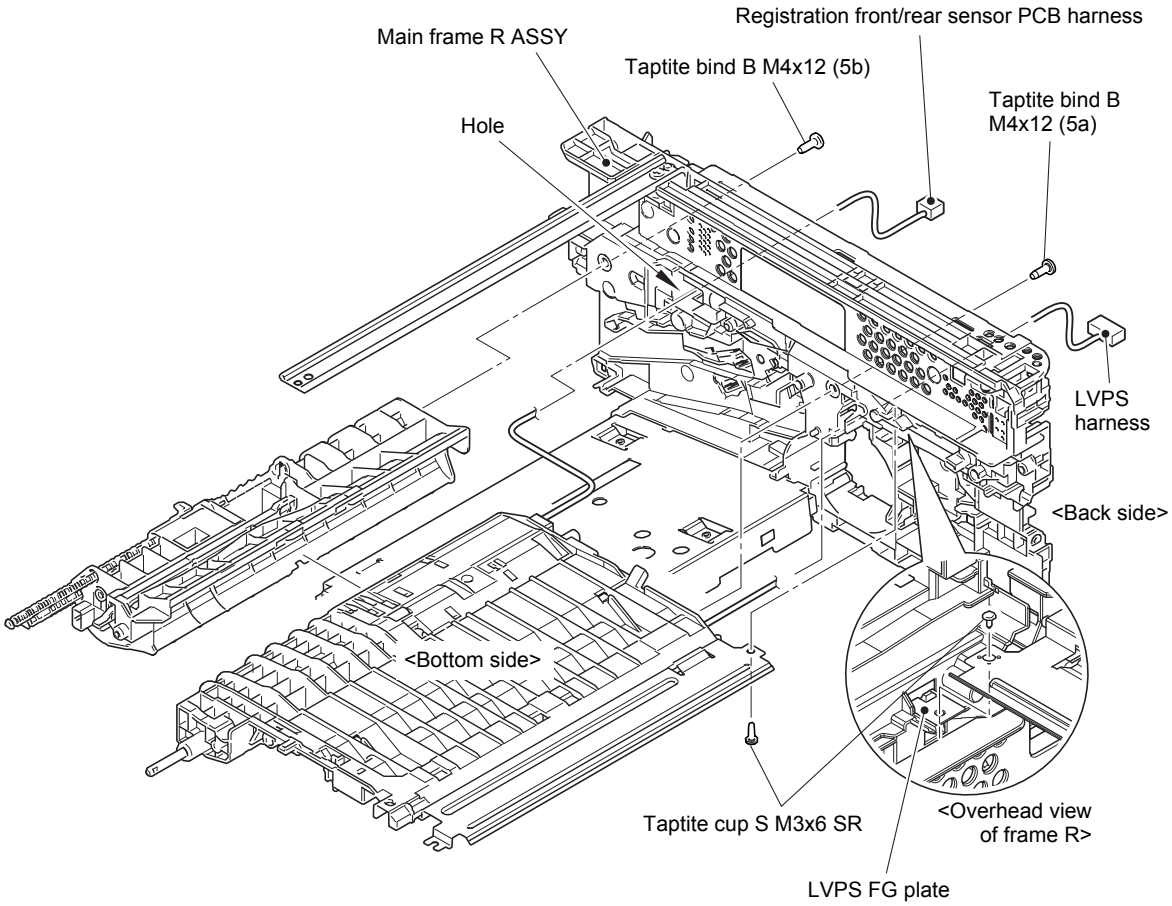

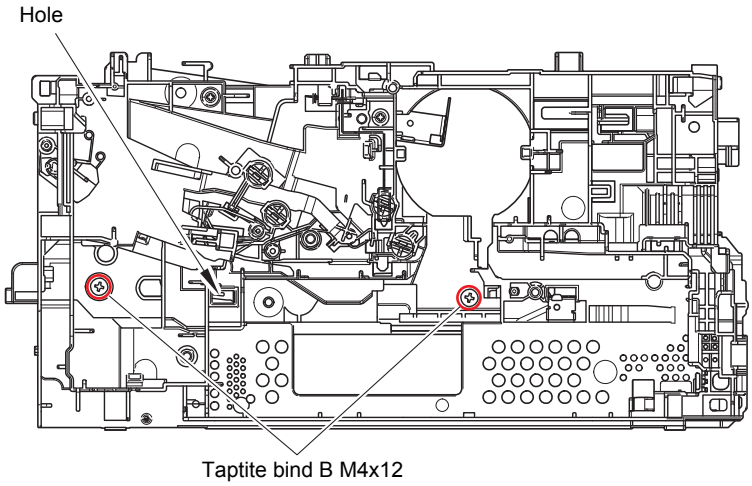

Fig. 3-104

Harness routing: Refer to "1. Right side of the machine" and "2. Top side of the registration chute".

Assembling Note:

- When attaching the main frame R ASSY, check that the LVPS FG plate is set to the main frame R ASSY.

(6) Remove the taptite bind B M3x10 screw. Release the each hook, and remove the registration front/rear actuator holder ASSY from the registration chute. Pull out the registration front/rear sensor PCB harness from the hole.

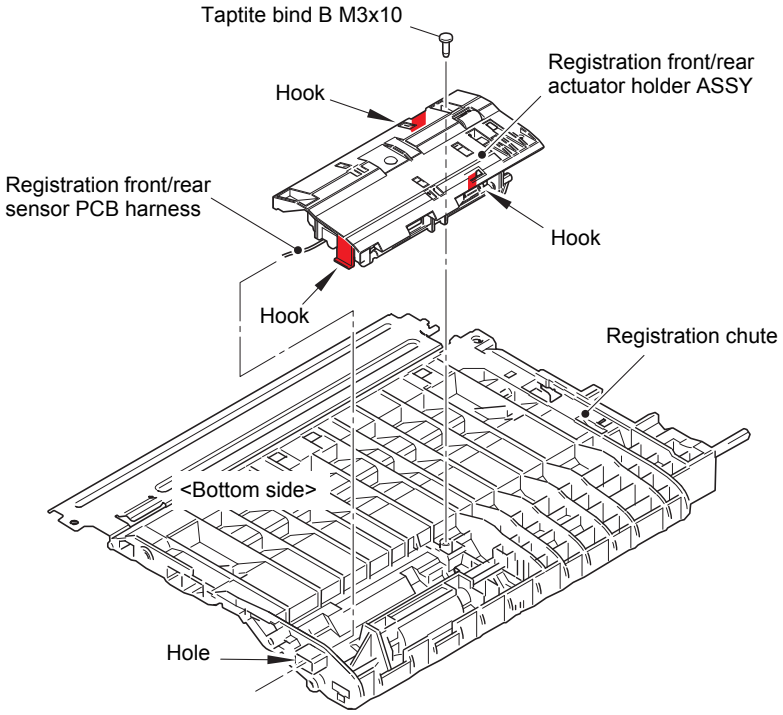

Fig. 3-105

Harness routing: Refer to "2. Top side of the registration chute".

Assembling Note:

- After assembling the registration front/rear actuator holder ASSY to the registration chute, push the actuators by fingers and check if it is pushed back by its spring (if the spring is not caught at assembling).

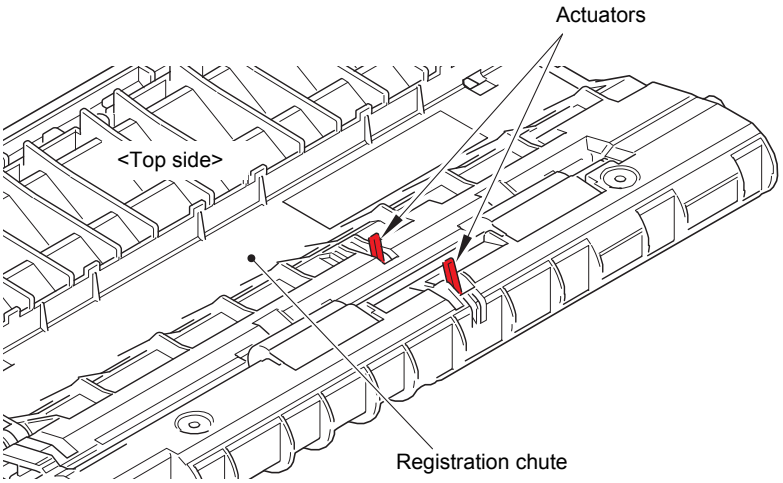

Fig. 3-106

CHAPTER 4 ADJUSTING AND UPDATING SETTINGS AS REQUIRED AFTER PARTS REPLACEMENT

1. IF YOU REPLACE THE MAIN PCB ASSY

■ What to do after replacement

- Setting by Spec (Function code: 74)
- Installing Firmware (Sub firmware, demo firmware, panel firmware, and main firmware)
- Initializing the EEPROM of the Main PCB ASSY (Function code: 01)
- Setting Serial Number and Entering Adjusted Value of Laser Unit
- Acquiring White Level Data (Function code: 55)
- Adjusting Touch Panel (Function code: 61) (Touch panel models only)
- Resetting to Factory Shipping State

■ What you need to prepare

(1) One USB cable

(2) Create a temporary folder on the C drive of the computer (Windows® XP or later).

(3) Service setting tool (BrUsbsn.zip)
Copy this file into the temporary folder created on the C drive. Extract the copied file and double-click "BrUsbsn.exe" to start it.

(4) Download utility (FILEDG32.EXE)
Copy this file into the temporary folder created on the C drive.

(5) Maintenance printer driver (MaintenanceDriver.zip)
When the maintenance printer driver is not installed on the computer, copy this file into the temporary folder created on the C drive, and extract the copied file. Refer to "APPENDIX 3 INSTALLING THE MAINTENANCE PRINTER DRIVER" for the installation procedure.

(6) Firmware

Sub firmware	LZXXXX_$.djf
Demo firmware	LZXXXX_$.djf
Panel firmware (Touch panel models only)	LZXXXX_$.djf
Main firmware	LZXXXX_$.djf
LZXXXX: First six digits of the part number of the firmware $: Alphabetic character representing the revision version of the firmware	

(7) Touch panel stylus (Touch panel models only)

1.1 Setting by Spec (Function code: 74)

Configure the setting by spec as described in “1.3.23 Setting by spec (function code: 74)” in Chapter 5.

1.2 Installing Firmware (Sub firmware, demo firmware, panel firmware, and main firmware)

1.2.1 Checking firmware version

Check whether the firmware installed on the machine is the latest version. If it is the latest version, there is no need to install the firmware. If it is not, be sure to install the firmware to the machine as described in “1.2.2 Installing firmware”.

<How to check firmware version>

For models without touch panel

(1) Press the [Menu], and then the [Start] key while the machine is in the ready state. Then, press the [▲] key four times to enter the maintenance mode.

(2) Press the [▲] or [▼] key to display "MAINTENANCE 25" on the LCD, and press the [OK] key. For keypad models, press the [2] and [5] keys in this order. The main firmware version information is displayed on the LCD.

(3) Press the [Start] key to display the version information of the sub firmware and demo firmware on the LCD, and then check the version information.

For models with touch panel

(1) Press and hold the [Home] key for approximately five seconds while the machine is in the ready state.

(2) Press and hold the blank field at the bottom of the LCD for approximately two seconds.

(3) Press the [*], [2], [8], [6], and [4] keys on the LCD in this order to enter the maintenance mode.

(4) Press the [2] and [5] keys in this order. The main firmware version information is displayed on the LCD.

(5) Press the [Mono Start] key to display the version information of the sub firmware, demo firmware, and panel firmware on the LCD, and then check the version information.

Note:

- You can check the sub firmware, demo firmware, panel firmware, and main firmware version by implementing "Print maintenance information (function code: 77)" (refer to “1.3.24 Print maintenance information (function code: 77)” in Chapter 5).

1.2.2 Installing firmware

Note:

- Install the Sub firmware → Demo firmware → Panel firmware → Main firmware in this order.
- DO NOT disconnect the power cord or USB cable from the machine or computer during installing.
- If the install is failed, turn OFF the machine and turn it back on. The machine enters the firmware installing mode automatically. Continue to the operating procedure below from the procedure (2).

<Operating Procedure>

Common to all models

(1) If the computer is connected to the machine using the USB cable, disconnect the USB cable to enter maintenance mode. (Refer to "1.1 How to Enter Maintenance Mode" in Chapter 5)

(2) Connect the machine to your computer using the USB cable.

(3) Open the temporary folder and double-click "FILEDG32.EXE" to start it, and select "Brother Maintenance USB Printer".

(4) Drag and drop the required program file (ex: LZXXXX_$.djf) in the same folder onto the Brother Maintenance USB Printer icon. The file is loaded to the machine, and installing to the flash ROM starts.

(5) When installing is completed, the machine restarts and returns to the ready state automatically.

(6) Turn OFF the power switch of the machine, and then repeat the procedures (1) to (5) to install required firmwares.

(7) Turn OFF the power switch of the machine, and disconnect the USB cable.

1.3 Initializing the EEPROM of the Main PCB ASSY (Function code: 01)

Initialize the EEPROM of the main PCB ASSY as described in "1.3.1 Initialize EEPROM parameters (function code: 01, 91)" in Chapter 5.

1.4 Setting Serial Number and Entering Adjusted Value of Laser Unit

<Operating Procedure>

Common to all models

(1) Enter the maintenance mode. (Refer to "1.1 How to Enter Maintenance Mode" in Chapter 5)

(2) Connect the machine to your computer using the USB cable.

(3) Double-click the "BrUsbsn.exe" file that was copied to the temporary folder in the computer to start it. "BrUsbSn" screen shown on the right appears.

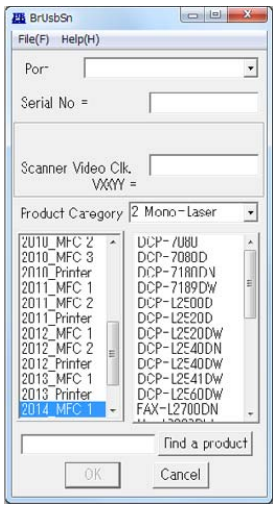

(4) Enter the model name of your machine in the [Find a Product] field (ex: DCP-L2520D) and click the [Find a Product] button. [Find a Product] button turns into [Find Next] button, and model name appears in the box above the [Find Next] button.

(5) Check if the model name of your machine is shown in the box above the [Find Next] button. If you can not find the model name of your machine, keep clicking the [Find Next] button until it appears.

(6) In the [Port] field on the "BrUsbSn" screen, select the port number assigned to the "Brother Maintenance USB Printer".
If the port number is unknown, follow the steps below to check it.

1) Click "Start", "Settings", and "Printers and Faxes". The "Printers and Faxes" window appears.

2) Right-click the "Brother Maintenance USB Printer" icon.

3) Click "Properties". The "Brother Maintenance USB Printer Properties" window appears.

4) Click the "Ports" tab. The Brother Maintenance USB Printer port number is displayed.

(7) Enter the serial number (15 digits) of the machine in the [Serial No] field.

(8) Check the laser serial number label attached to the location shown in the figure below.

(9) Enter the five digits of the laser serial number in the [Scanner Video Clk] field.

ex.) SN011406058461734753

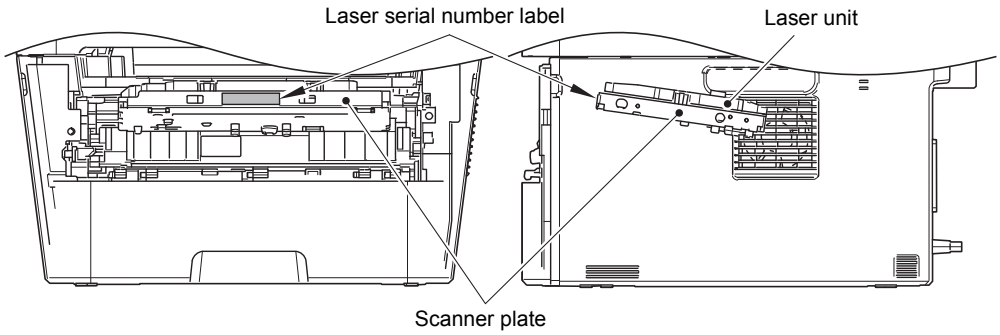

Fig. 4-1

(10) Click the [OK] button. The serial number is written to the machine.

(11) Turn OFF the power switch of the machine and disconnect the USB cable from the machine and computer.

Note:

- The serial number can be set by referring to "1.3.26 Display machine log information (function code: 80)" in Chapter 5.
- Refer to "APPENDIX 1 SERIAL NUMBERING SYSTEM" for how to check the serial number.

1.5 Acquiring White Level Data (Function code: 55)

Acquire white level data as described in “1.3.17 Acquire white level data and set CIS scan area (function code: 55)” in Chapter 5.

1.6 Adjusting Touch Panel (Function code: 61) (Touch panel models only)

Adjust the touch panel as described in “1.3.18 Adjust touch panel (function code: 61)” in Chapter 5.

1.7 Resetting to Factory Shipping State

<Operating Procedure>

(1) Press and hold the [Home] key for approximately five seconds while the machine is in the ready state. The screen below appears on the LCD.

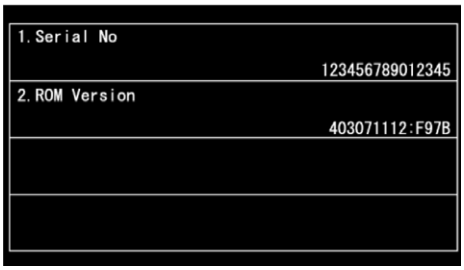

(2) Press and hold the blank field at the bottom for approximately two seconds. The screen below appears on the LCD.

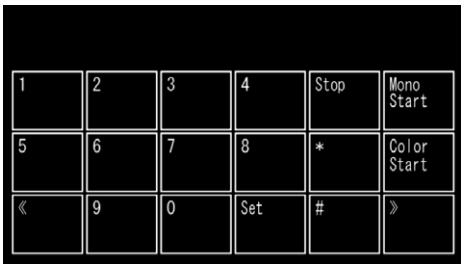

(3) Press the [*], [1], [9], [3], and [7] keys on the LCD in this order.

(4) Press the [0], [0], [8], and [4] keys on the LCD in this order.

(5) Press the [▲] or [▼] key to display “FUNC_DISABLE” on the LCD.

(6) Press the [Set] key. Default function selection is disabled.

(7) Press the 9 key twice and return to the ready state.

Note:

- Follow the procedures above or the machine enters the default function selection mode where basic functions are inoperable.

2. IF YOU REPLACE THE LOW-VOLTAGE POWER SUPPLY PCB ASSY

■ **What to do after replacement**

- Reset Irregular Power Supply Detection Counter of the Low-voltage Power Supply PCB (Function code: 88)

■ **What you need to prepare**

None

2.1 Reset Irregular Power Supply Detection Counter of the Low-voltage Power Supply PCB (Function code: 88)

Refer to "1.3.29 Reset irregular power supply detection counter of low-voltage power supply PCB (function code: 88)" in Chapter 5 to reset the irregular power supply detection counter.

3. IF YOU REPLACE THE LASER UNIT

■ What to do after replacement

- Entering Adjusted Value of Laser Unit

■ What you need to prepare

(1) One USB cable

(2) Create a temporary folder on the C drive of the computer (Windows® XP or later).

(3) Service setting tool (BrUsbsn.zip)
Copy this file into the temporary folder created on the C drive. Extract the copied file and double-click "BrUsbsn.exe" to start it.

(4) Download utility (FILEDG32.EXE)
Copy this file into the temporary folder created on the C drive.

(5) Maintenance printer driver (MaintenanceDriver.zip)
When the maintenance printer driver is not installed, copy this file into the temporary folder created on the C drive, and extract the copied file. Refer to “APPENDIX 3 INSTALLING THE MAINTENANCE PRINTER DRIVER” for the installation procedure.

3.1 Entering Adjusted Value of Laser Unit

<Operating Procedure>

Common to all models

(1) Enter the maintenance mode. (Refer to "1.1 How to Enter Maintenance Mode" in Chapter 5)

(2) Connect the machine to your computer using the USB cable.

(3) Double-click the "BrUsbsn.exe" file that was copied to the temporary folder in the computer to start it. "BrUsbSn" screen shown on the right appears.

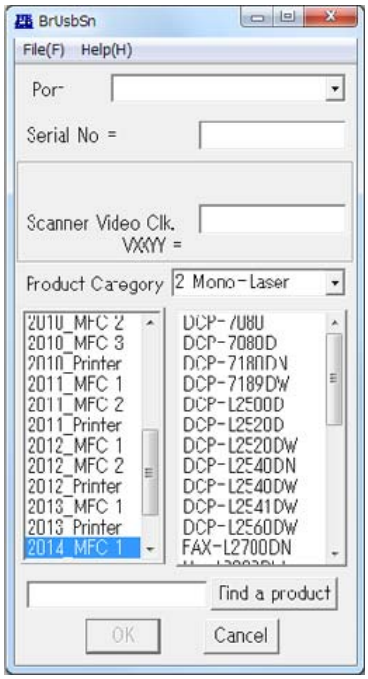

(4) Enter the model name of your machine in the [Find a Product] field (ex: DCP-L2520D) and click the [Find a Product] button. [Find a Product] button turns into [Find Next] button, and model name appears in the box above the [Find Next] button.

(5) Check if the model name of your machine is shown in the box above the [Find Next] button. If you can not find the model name of your machine, keep clicking the [Find Next] button until it appears.

(6) In the [Port] field on the "BrUsbSn" screen, select the port number assigned to the "Brother Maintenance USB Printer".
If the port number is unknown, follow the steps below to check it.

1) Click "Start", "Settings", and "Printers and Faxes". The "Printers and Faxes" window appears.

2) Right-click the "Brother Maintenance USB Printer" icon.

3) Click "Properties". The "Brother Maintenance USB Printer Properties" window appears.

4) Click the "Ports" tab. The Brother Maintenance USB Printer port number is displayed.

(7) Check the laser serial number label attached to the location shown in the figure below.

(8) Enter the five digits of the laser serial number in the [Scanner Video Clk] field.
ex.) SN011406058461<u>34753</u>

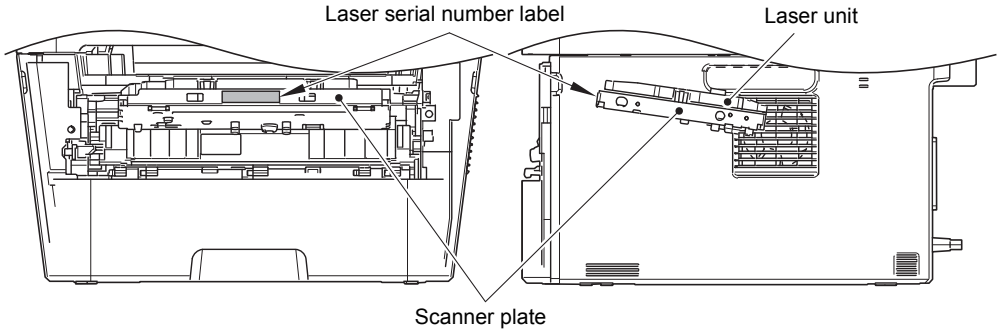

Fig. 4-2

(9) Click the [OK] button. The adjusted value of laser unit is written to the machine.

(10) Turn OFF the power switch of the machine and disconnect the USB cable from the machine and computer.

4. IF YOU REPLACE THE PANEL UNIT OR PANEL PCB UNIT

■ What to do after replacement

- Installing Firmware (Touch panel models only)
- Adjusting Touch Panel (Function code: 61) (Touch panel models only)
- Checking LCD Operation (Function code: 12)

■ What you need to prepare (Touch panel models only)

(1) One USB cable

(2) Create a temporary folder on the C drive of the computer (Windows® XP or later).

(3) Download utility (FILEDG32.EXE)
Copy this file into the temporary folder created on the C drive.

(4) Maintenance printer driver (MaintenanceDriver.zip)
When the maintenance printer driver is not installed on the computer, copy this file into the temporary folder created on the C drive, and extract the copied file. Refer to "APPENDIX 3 INSTALLING THE MAINTENANCE PRINTER DRIVER" for the installation procedure.

(5) Firmware

Sub firmware	LZXXXX_$.djf
Panel firmware	LZXXXX_$.djf
Main firmware	LZXXXX_$.djf
LZXXXX: First six digits of the part number of the firmware $: Alphabetic character representing the revision version of the firmware	

(6) Touch panel stylus

4.1 Installing Firmware (Touch panel models only)

4.1.1 Checking firmware version

Check whether the firmware installed on the machine is the latest version as described in “1.2.1 Checking firmware version” in this chapter. If it is the latest version, there is no need to install the firmware. If it is not, be sure to install all the latest firmware.

4.1.2 Installing firmware

If the firmware installed on the machine is not the latest version, install the firmware as described in “1.2.2 Installing firmware” in this chapter.

4.2 Adjusting Touch Panel (Function code: 61) (Touch panel models only)

Adjust the touch panel as described in “1.3.18 Adjust touch panel (function code: 61)” in Chapter 5.

4.3 Checking LCD Operation (Function code: 12)

Check the LCD operation as described in “1.3.6 Check LCD operation (function code: 12)” in Chapter 5.

5. IF YOU REPLACE THE FIRST SIDE CIS UNIT OR DOCUMENT SCANNER UNIT

■ **What to do after replacement**

- Acquiring White Level Data (Function code: 55)
- Scanning and Printing Check

5.1 Acquiring White Level Data (Function code: 55)

Acquire white level data as described in "1.3.17 Acquire white level data and set CIS scan area (function code: 55)" in Chapter 5.

5.2 Scanning and Printing Check

Scan the test chart TC-023 on the scanner glass, and check if there is any problem on the printed image.

Check if there is any problem on the document scanner unit and the performance of recording part.

6. IF YOU REPLACE THE ADF UNIT OR SECOND SIDE CIS UNIT

■ **What to do after replacement**

- Acquiring White Level Data (Function code: 55) (Duplex scanning models only)
- Scanning and Printing Check

6.1 Acquiring White Level Data (Function code: 55) (Duplex scanning models only)

Acquire white level data as described in "1.3.17 Acquire white level data and set CIS scan area (function code: 55)" in Chapter 5.

6.2 Scanning and Printing Check

Print a copy of any document with ADF, and check if there is any problem on the printed image.
Check if there is any problem on the performance of the ADF and recording part.

CHAPTER 5 SERVICE FUNCTIONS

1. FUNCTION CODE

Maintenance mode is exclusively designed for checking, setting and adjusting the machine using the keys on the control panel. These keys allow you to execute sensor operation check, test printing, log information and error code display, or worker switch (WSW) setting.

1.1 How to Enter Maintenance Mode

1.1.1 Method of entering maintenance mode for service personnel

<Operating Procedure>

For models without touch panel

(1) Press the [Menu], and then the [Start] key while the machine is in the ready state. Then, press the [▲] key four times to enter the maintenance mode.

(2) "■■ MAINTENANCE ■■■" is displayed on the LCD to indicate that the machine entered the initial state of maintenance mode. The machine is ready to accept entry via keys.

(3) To select any of the maintenance mode functions shown in the "1.2 List of Maintenance Mode Functions", press the [▲] or [▼] key. Check that the desired maintenance mode is displayed on the LCD, and press the [OK] key. For models with keypad, you can enter the desired function code number directly with the keypad.

For models with touch panel

(1) Press and hold the [Home] key for approximately five seconds while the machine is in the ready state. The display shown on the right appears on the LCD.

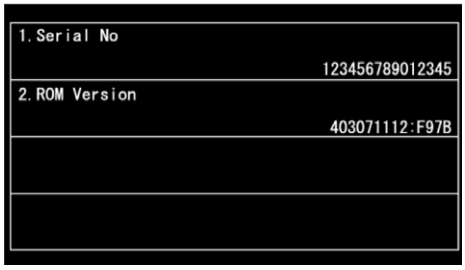

(2) Press and hold the blank field at the bottom for approximately two seconds. The display shown on the right appears on the LCD.

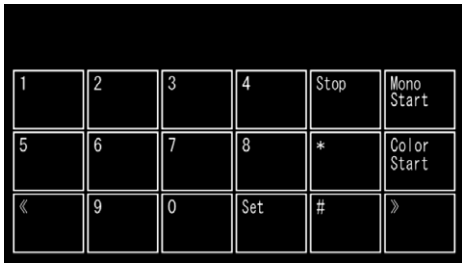

(3) Press the [*], [2], [8], [6], and [4] keys in this order. The display shown on the right appears on the LCD, and the machine enters into maintenance mode.

(4) To select any of the maintenance mode functions shown in the "1.2 List of Maintenance Mode Functions", use the keypad to enter the maintenance mode function code to be executed.

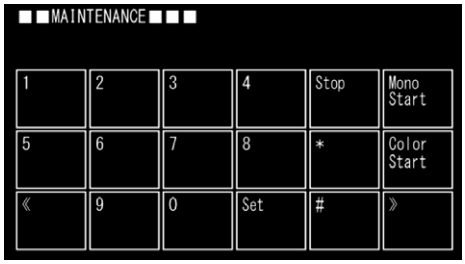

Confidential

1.1.2 Method of entering end-user accessible maintenance mode

The maintenance mode functions should only be accessed by service personnel. However, end users are allowed to use some of these functions under the guidance of service personnel over the phone. End users can only use the functions shaded in the "1.2 List of Maintenance Mode Functions" (function code: 09, 10, 11, 12, 25, 28, 43, 45, 52, 53, 54, 61, 77, 80, 82, 87, 91).

<Operating Procedure>

For models without touch panel

(1) Press the [Menu], [Start], and [Menu] keys in this order while the machine is in the ready state. "0" is displayed on the LCD.

(2) Press the [▲] or [▼] key several times until the desired maintenance mode function is displayed on the LCD. Check that the desired maintenance mode is displayed on the LCD, and press the [OK] key.

(3) Each time the selected maintenance mode function is completed, the machine returns to the ready state automatically. For function codes 12, 25, 28, 45, 80, and 82, pressing the [Stop] key returns the machine to the ready state.

For models with touch panel

(1) Press and hold the [Home] key for approximately five seconds while the machine is in the ready state. The display shown on the right appears on the LCD.

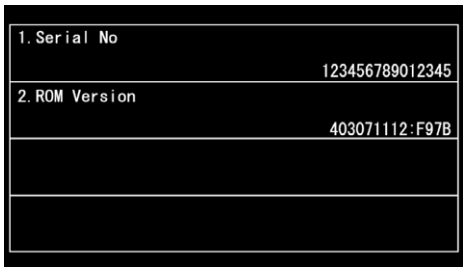

(2) Press and hold the blank field at the bottom for approximately two seconds. The display shown on the right appears on the LCD.

(3) Press the [*], [0], and [#] keys on the LCD in this order. The machine enters into ready state to accept function code entry, so press the function code you want to execute.

(4) Each time the selected maintenance mode function is completed, the machine returns to the ready state automatically.

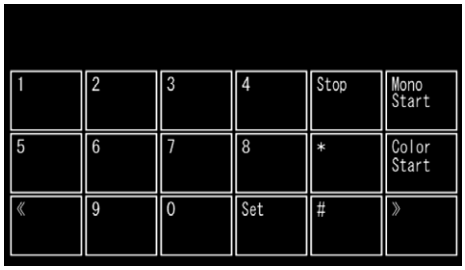

1.2 List of Maintenance Mode Functions

Function code	Function	Refer to:
01	Initialize EEPROM parameters	1.3.1
05	Print white level / black level data for document scanning compensation	1.3.2
08	ADF performance test	1.3.3
09	Monochrome print quality test pattern	1.3.4
10	Set worker switches (WSW)	1.3.5
11	Print worker switch (WSW) setting data	1.3.5
12	Check LCD operation	1.3.6
13	Check control panel operation	1.3.7
25	Display software version	1.3.8
28	Change OnePushDemo function setting	1.3.9
32	Check sensor operation	1.3.10
33	Display LAN connection status	1.3.11
43	Set PC print functions	1.3.12
45	Change USB No. return value / Adjust left-end print start position on second side when duplex printing	1.3.13
52	Set country / language	1.3.14
53	Transfer received fax data / log information	1.3.15
54	Fine-tune scanning position	1.3.16
55	Acquire white level data and set CIS scan area	1.3.17
61	Adjust touch panel	1.3.18
67	Continuous print test	1.3.19
69	Print frame pattern (single-side printing)	1.3.20
70	Print frame pattern (duplex printing)	1.3.21
71	Test pattern	1.3.22
74	Setting by spec	1.3.23
77	Print maintenance information	1.3.24
78	Check fan operation	1.3.25
80	Display machine log information	1.3.26
82	Display machine error code	1.3.27
87	Send communication log information to telephone line	1.3.28
88	Reset irregular power supply detection counter of low-voltage power supply PCB	1.3.29
91	Initialize EEPROM parameters	1.3.1
99	Quit maintenance mode	1.3.30

* The maintenance mode functions shaded in the table can be used by end users.

1.3 Details of Maintenance Mode Functions

1.3.1 Initialize EEPROM parameters (function code: 01, 91)

<Function>

This function is used to initialize the setting values for operation parameters, user switches, and worker switches (WSW) registered in the EEPROM.

Entering function code 01 initializes most EEPROM areas. Entering function code 91 initializes only the specified areas as shown in the table below.

<table>
<tr><th>Data item</th><th>01</th><th>91</th></tr>
<tr><td>Printer switch (counter information)</td><td rowspan="3">Areas not to be initialized</td><td rowspan="7">Areas not to be initialized</td></tr>
<tr><td>Error history</td></tr>
<tr><td>Mac Address (Ethernet Address)</td></tr>
<tr><td>Password for control panel operation lock</td><td rowspan="8">Areas to be initialized</td></tr>
<tr><td>Secure function lock</td></tr>
<tr><td>Telephone function registration / Telephone directory</td></tr>
<tr><td>Worker switches</td></tr>
<tr><td>User switches (items initialized when "Factory Reset" is executed)</td><td rowspan="4">Areas to be initialized</td></tr>
<tr><td>Function settings except user switches (settings not subject to "Factory Reset")
- Language
- Secure Print setting
- Interface</td></tr>
<tr><td>LAN setting</td></tr>
<tr><td>PCL core area
(Emulation setting)</td></tr>
</table>

<Operating Procedure>

For models without keypad

(1) Press the [▲] or [▼] key in the initial state of maintenance mode to display "MAINTENANCE 01" (or "MAINTENANCE 91" as required) on the LCD, and press the [OK] key. "PARAMETER INIT" is displayed on the LCD.

(2) When initializing parameters is completed, the machine returns to the initial state of maintenance mode.

For models with keypad

(1) Press the [0], and then the [1] key (or press the [9] and then the [1] key as required) in the initial state of maintenance mode. "PARAMETER INIT" is displayed on the LCD.

(2) When initializing parameters is completed, the machine returns to the initial state of maintenance mode.

Note:

- Function code 01 is for service personnel. Function code 91 is for user support.

1.3.2 Print white level / black level data for document scanning compensation (function code: 05)

<Function>

This function is used to print the contrast level data for document scanning compensation.

<Operating Procedure>

Note:
- Be sure not to perform this operation procedure immediately after the power is turned ON, but after performing the document scanning operation at least once. The machine initializes the contrast level data and obtains the standard value for document scanning compensation at the start of the document scanning. Therefore, this function is inoperable without performing a document scanning operation first.
- The print result varies depending on whether color scanning or monochrome scanning is performed immediately before this operation procedure. Check the contrast level data you want to print and then implement the procedure below.

For models without keypad

(1) For monochrome scanning, make a monochrome copy of the document. For color scanning, make a color copy of the document.

(2) Press the [▲] or [▼] key in the initial state of maintenance mode to display "MAINTENANCE 05" on the LCD, and press the [OK] key.
"PRINTING" is displayed on the LCD, and the data list for document scanning compensation including the following data will be printed.

Note:
- When there is no paper set in the paper tray, printing will be canceled.

(3) When printing is completed, the machine returns to the initial state of maintenance mode.

For models with keypad

(1) For monochrome scanning, make a monochrome copy of the document. For color scanning, make a color copy of the document.

(2) Press the [0], and then the [5] key in the initial state of maintenance mode. "1. FRONT 2. BACK" is displayed on the LCD. (Duplex scanning models only)

(3) Press the [1] or [2] key. "PRINTING" is displayed on the LCD, and the data list for document scanning compensation including the following data will be printed.

Note:
- When there is no paper set in the paper tray, printing will be canceled.

(4) When printing is completed, the machine returns to the initial state of maintenance mode.

■ Data to be printed (common to monochrome / color)

a) LED CURRENT 1 Byte
b) LED pulse data1 (UP) (G) 2 Byte
c) LED pulse data1 (DOWN) (G) 2 Byte
d) LED pulse data1 (UP) (B) 2 Byte
e) LED pulse data1 (DOWN) (B) 2 Byte
f) LED pulse data1 (UP) (R) 2 Byte
g) LED pulse data1 (DOWN) (R) 2 Byte
h) LED pulse data2 (UP) (G) 2 Byte
i) LED pulse data2 (DOWN) (G) 2 Byte
j) LED pulse data2 (UP) (B) 2 Byte
k) LED pulse data2 (DOWN) (B) 2 Byte
l) LED pulse data2 (UP) (R) 2 Byte
m) LED pulse data2 (DOWN) (R) 2 Byte
n) VCOM DATA 2 Byte
o) Background color compensation data 1 Byte
p) GAIN adjustment black Level MAX Data (300 dpi SX) 2 Byte
q) GAIN adjustment black Level MAX Data (600 dpi SX) 2 Byte
r) GAIN adjustment black Level MAX Data (300 dpi DX first side) 2 Byte *1
s) GAIN adjustment black Level MAX Data (600 dpi DX first side) 2 Byte *1
t) GAIN adjustment black Level MAX Data (300 dpi DX second side) 2 Byte *1
u) GAIN adjustment black Level MAX Data (600 dpi DX second side) 2 Byte *1
v) HP detection black compensation data 2 Byte x 12
w) Black level data Based on previous scanning pixel count
x) White level data (G) Based on previous scanning pixel count
y) White level data (B) Based on previous scanning pixel count
z) White level data (R) Based on previous scanning pixel count

*1 Displayed on duplex models only

■ Common to first / second side

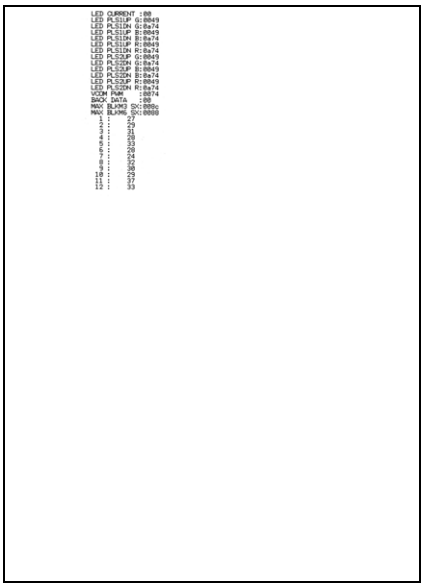

Fig. 5-1

1.3.3 ADF performance test (function code: 08)

<Function>

This function is used to test the performance of the automatic document feeder (ADF). The scanned pages of the documents fed by the ADF are counted and the result is displayed on the LCD.

<Operating Procedure>

For models without keypad

(1) Set the documents in the ADF unit. "DOC. READY" is displayed on the LCD.

(2) Press the [▲] or [▼] key in the initial state of maintenance mode to display "MAINTENANCE 08" on the LCD, and press the [OK] key. "ADF CHECK P.**" is displayed on the LCD, and the documents are ejected while the scanned pages are counted. (** indicates the current count of the scanned pages.)

> **Note:**
> - For duplex scanning models, as two faces per sheet are scanned, the value increases by two each time a sheet is ejected.

(3) When the [Stop] key is pressed, the machine returns to the initial state of maintenance mode.

For models with keypad

(1) Set the documents in the ADF unit. "DOC. READY" is displayed on the LCD.

(2) Press the [0], and then the [8] key in the initial state of maintenance mode. "ADF CHECK P.**" is displayed on the LCD, and the documents are ejected while the scanned pages are counted.
(** indicates the current count of the scanned pages.)

> **Note:**
> - For duplex scanning models, as two faces per sheet are scanned, the value increases by two each time a sheet is ejected.

(3) When the [X] or [Stop] key is pressed, the machine returns to the initial state of maintenance mode.

> **Note:**
> - If the ADF cover is open when the function is executed, "NO DOCUMENT" is displayed on the LCD and the machine returns to the ready state of maintenance mode.
> - If no document is set in ADF when the function is executed, "NO DOCUMENT" is displayed on the LCD and the machine returns to the ready state of maintenance mode.

1.3.4 Monochrome print quality test pattern (function code: 09)

<Function>

This function is used to print monochrome test patterns to check any missing image and print quality.

<Operating Procedure>

For models without keypad

(1) Press the [▲] or [▼] key in the initial state of maintenance mode to display "MAINTENANCE 09" on the LCD, and press the [OK] key. "MAINTENANCE 09" is displayed on the LCD, and printing the monochrome print quality test pattern (refer to the figure below) starts. When printing is completed, the machine returns to the initial state of maintenance mode.

For models with keypad

(1) Press the [0], and then the [9] key in the initial state of maintenance mode. "MAINTENANCE 09" is displayed on the LCD, and printing the monochrome print quality test pattern (refer to the figure below) starts. When printing is completed, the machine returns to the initial state of maintenance mode.

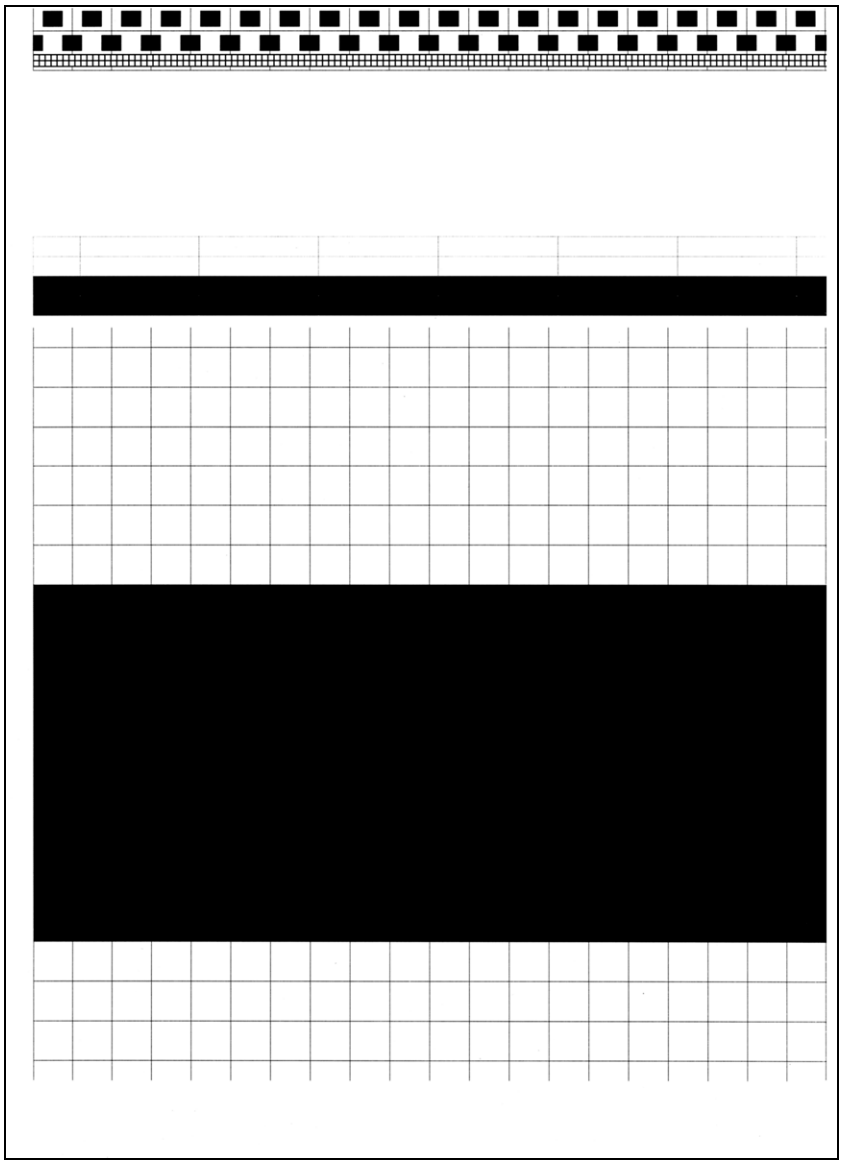

Fig. 5-2

Confidential

1.3.5 Set worker switches (WSW) and print worker switch setting data (function code: 10, 11)

[1] Set worker switches (WSW) (function code: 10)

<Function>

The worker switches shown in the table below can be used to set the function to satisfy various requirements. These switch settings can be changed using the keys on the control panel.
The worker switches are factory set to conform with the laws and regulations of the country the machine is shipped to. Do not change these settings unless necessary.

WSW No.	Function	WSW No.	Function
WSW01	Dial pulse setting	WSW40	V.34 modem settings
WSW02	Tone signal setting	WSW41	ON-duration of the scanning light source
WSW03	PABX mode setting	WSW42	Internet mail settings
WSW04	Transfer facility setting	WSW43	Function setting 16
WSW05	1st dial tone and busy tone detection	WSW44	Speeding up scanning-1
WSW06	[Redial/Pause] key and 2nd dial tone detection	WSW45	Speeding up scanning-2
WSW07	Dial tone setting 1	WSW46	PC power monitoring and parallel port settings
WSW08	Dial tone setting 2	WSW47	Switching between high- and full-speed USB
WSW09	Protocol definition 1	WSW48	USB setup latency
WSW10	Protocol definition 2	WSW49	End-of-copying beep
WSW11	Busy tone setting	WSW50	SDAA setting
WSW12	Signal detection condition setting	WSW51	Function setting 17
WSW13	Modem setting	WSW52	Function setting 18
WSW14	AUTO ANS facility setting	WSW53	Function setting 19
WSW15	Redial facility setting	WSW54	Function setting 20
WSW16	Function setting 1	WSW55	Interval for regular developing bias value correction
WSW17	Function setting 2	WSW56	Function setting 21
WSW18	Function setting 3	WSW57	Function setting 22
WSW19	Transmission speed setting	WSW58	Function setting 23
WSW20	Overseas communication mode setting	WSW59	Function setting 24
WSW21	TAD setting 1	WSW60	Function setting 25
WSW22	ECM and call waiting caller ID	WSW61	Scanning light intensity to judge to be stable 1
WSW23	Communication setting	WSW62	Scanning light intensity to judge to be stable 2
WSW24	TAD setting 2	WSW63	Function setting 26
WSW25	TAD setting 3	WSW64	Language / default paper size setting
WSW26	Function setting 4	WSW65	Paper support setting
WSW27	Function setting 5	WSW66	Change of the setting is prohibited
WSW28	Function setting 6	WSW67	Change of the setting is prohibited
WSW29	Function setting 7	WSW68	Change of the setting is prohibited
WSW30	Function setting 8	WSW69	Change of the setting is prohibited
WSW31	Function setting 9	WSW70	Change of the setting is prohibited
WSW32	Function setting 10	WSW71	Change of the setting is prohibited
WSW33	Function setting 11	WSW72	Change of the setting is prohibited
WSW34	Function setting 12	WSW73	Change of the setting is prohibited
WSW35	Function setting 13	WSW74	ADF stop control
WSW36	Function setting 14	WSW75	Switch back ejection distance
WSW37	Function setting 15	WSW76	Set the limit for the number of documents to be ejected in reverse order for single-side scanning from ADF
WSW38	V.34 transmission settings	WSW77	Set the limit for the number of documents to be ejected in reverse order for duplex scanning from ADF
WSW39	V.34 transmission speed	WSW78	Recording stop function when the drum reaches the end of life

* Refer to the separate manual for details of worker switches.

<Operating Procedure>

For models without keypad

(1) Press the [▲] or [▼] key in the initial state of maintenance mode to display "MAINTENANCE 10" on the LCD, and press the [OK] key. "WSW00" is displayed on the LCD.

(2) Press the [▲] or [▼] key to display the worker switch number for which you want to change the setting on the LCD.

(3) Press the [OK] key. The following display appears on the LCD.

Selector No. 1 Selector No. 8

WSWXX = 0 0 0 0 0 0 0 0

(4) Pressing the [▲] key enters "1", and pressing the [▼] key enters "0". Press either to enter desired number to Selector No.1. The next digit starts flashing.

(5) Keep entering numbers to Selector No.8 using the [▲] or [▼] key as described in the procedure (4).

(6) Press the [OK] key. The new selector setting value is stored in the EEPROM, and the LCD returns to the ready state for worker switch number entry ("WSW00").

(7) When all switch setting is completed, press the [Stop] key to return the machine to the initial state of maintenance mode.

For models with keypad

(1) Press the [1], and then the [0] key in the initial state of maintenance mode. "WSW00" is displayed on the LCD.

(2) Enter the worker switch number that you want to change the setting. The following display appears on the LCD.

Selector No. 1 Selector No. 8

WSWXX = 0 0 0 0 0 0 0 0

(3) Press the [◀] or [▶] key to move the cursor to the desired selector, and change the setting by pressing the [1] or [0] key.

(4) When changing the setting is completed, press the [SET] or [OK] key. The new selector setting value is stored in the EEPROM, and the LCD returns to the ready state for worker switch number entry ("WSW00").

(5) When all switch setting is completed, press the [X] or [Stop] key to return the machine to the initial state of maintenance mode.

Note:

- To cancel operation and return to the initial state of maintenance mode, press the [X] or [Stop] key.
- If there is no entry for one minute or longer after entering the first digit on 2-digits worker switch number selection, the machine returns to the initial state of maintenance mode automatically.

[2] Print worker switch (WSW) setting data (function code: 11)

<Function>

This function is used to print the setting items of the worker switches and the set details.

<Operating Procedure>

For models without keypad

(1) Press the [▲] or [▼] key in the initial state of maintenance mode to display "MAINTENANCE 11" on the LCD, and press the [OK] key. "PRINTING" is displayed on the LCD, and printing the CONFIGURATION LIST (refer to the figure below) starts.

(2) When printing is completed, the machine returns to the initial state of maintenance mode.

For models with keypad

(1) Press the [1] key twice in the initial state of maintenance mode. "PRINTING" is displayed on the LCD, and printing the CONFIGURATION LIST (refer to the figure below) starts.

(2) When printing is completed, the machine returns to the initial state of maintenance mode.

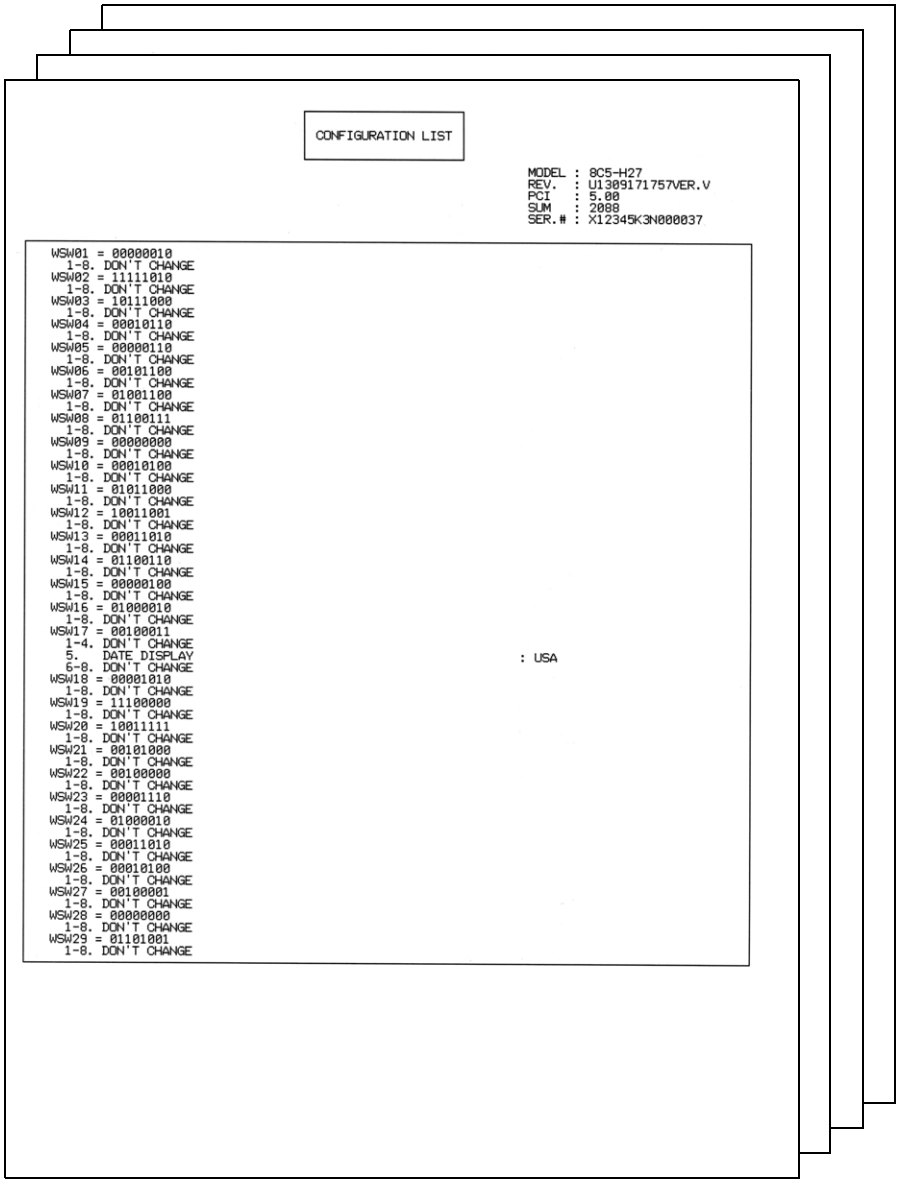

Fig. 5-3

Confidential

1.3.6 Check LCD operation (function code: 12)

<Function>

This function is used to check that the LCD on the control panel is operating normally.

<Operating Procedure>

For models without keypad

(1) Press the [▲] or [▼] key in the initial state of maintenance mode to display "MAINTENANCE 12" on the LCD, and press the [OK] key.

(2) Each press of the [Start] key cycles through the LCD display as shown in the figure below.

(3) When the [Stop] key is pressed, the machine returns to the initial state of maintenance mode, regardless of the display status.

For models with keypad

(1) Press the [1], and then the [2] key in the initial state of maintenance mode.

(2) Each press of the [#] or [Start] key cycles through the LCD display as shown in the figure below. Also, pressing the [*] key returns the display to the previous state. Pressing the [#] key at the last display returns the display to Display 1.

(3) When the [X] or [Stop] key is pressed, the machine returns to the initial state of maintenance mode, regardless of the display status.

■ **LCD**

<Monochrome LCD models>

For models with backlight

(DCP-7080/7080D/7180DN/L2540DN/L2540DW/L2541DW, MFC-7380/7480D/7880DN)

For models without backlight

(DCP-L2500D/L2520D/L2520DW, MFC-L2680W/L2685DW/L2700D/L2701D/L2700DN/L2700DW/L2701DW/L2703DW/L2705DW/L2707DW)

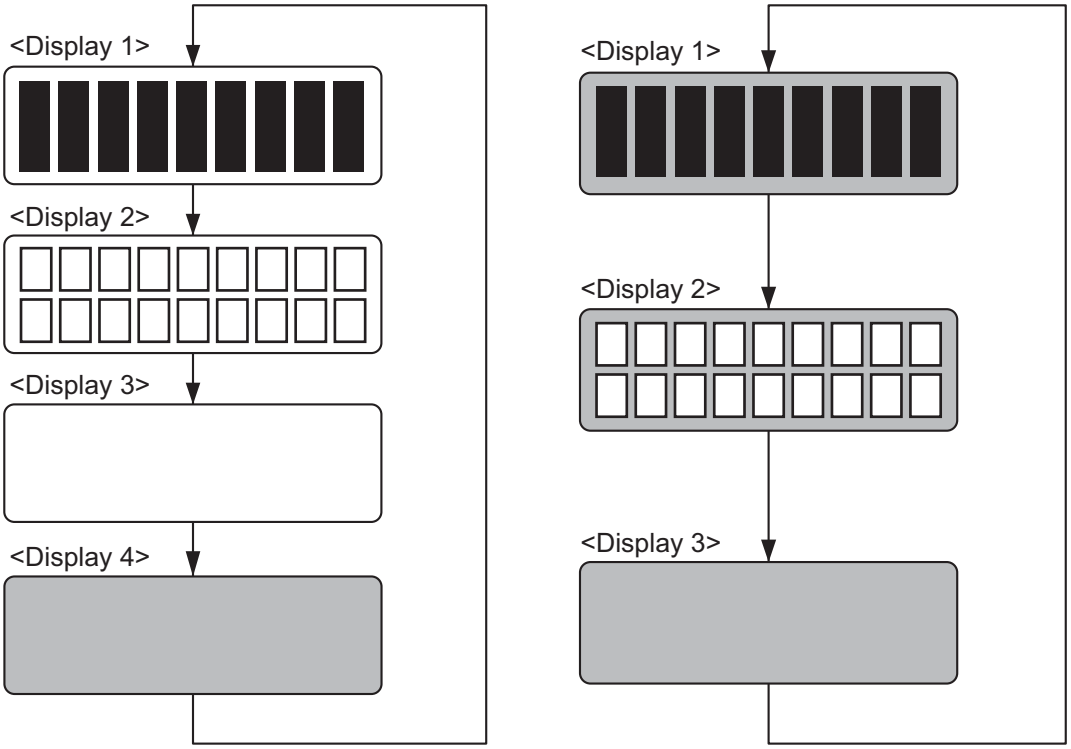

Fig. 5-4

<Color LCD models (DCP-L2560DW, HL-L2380DW, MFC-L2720DW/L2740DW)>

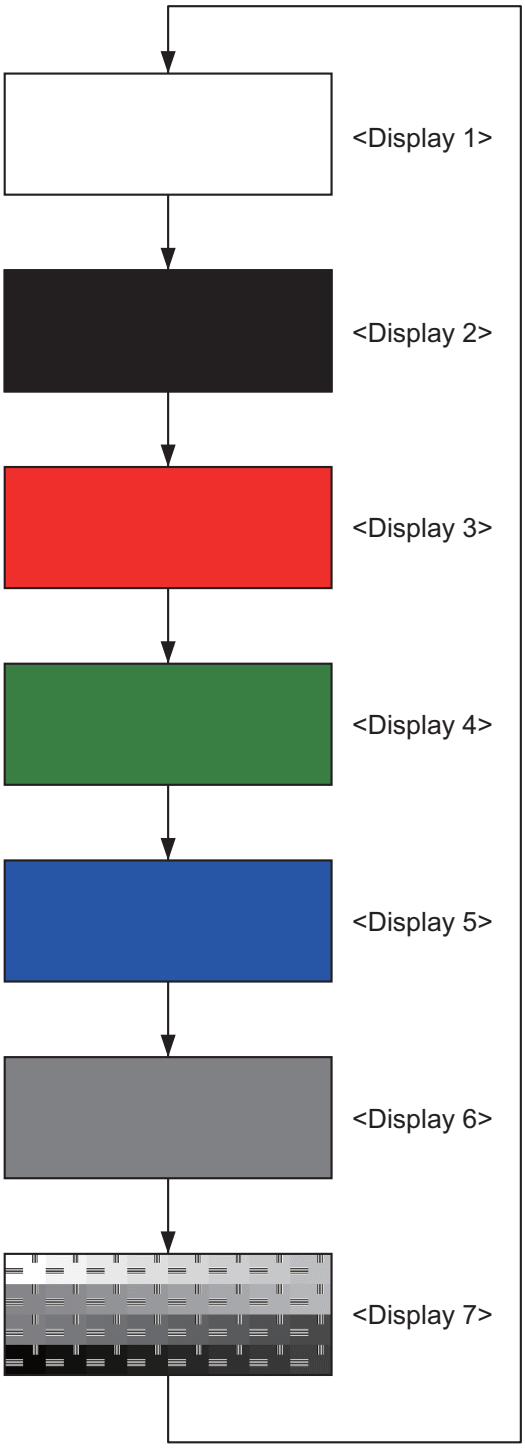

Fig. 5-5

Confidential

1.3.7 Check control panel operation (function code: 13)

<Function>

This function is used to check that keys on the control panel are operating normally.

<Operating Procedure>

For models without keypad

(1) Press the [▲] or [▼] key in the initial state of maintenance mode to display "MAINTENANCE 13" on the LCD, and press the [OK] key. "00:" is displayed on the LCD.

(2) Press the keys on the control panel according to the numbers provided in the figure below. Each time the key is pressed, the corresponding figure is displayed on the LCD in decimal notation. Check that the number and the key name displayed on the LCD matches the number assigned to the key that has been pressed. If the keys are pressed in the incorrect order, "INVALID OPERATE" is displayed on the LCD. Press the [Stop] key and try again with the correct key.

(3) When the key operation is normal, the machine returns to the initial state of maintenance mode when the last key is pressed. To cancel operation and return to the initial state of maintenance mode, press the [Stop] key.

For models with keypad

(1) Press the [1], and then the [3] key in the initial state of maintenance mode. "00" is displayed on the LCD.

(2) Press the keys on the control panel according to the numbers provided in the figure below. Each time the key is pressed, the corresponding figure is displayed on the LCD in decimal notation. Check that the number and the key name displayed on the LCD matches the number assigned to the key that has been pressed. If the keys are pressed in the incorrect order, "INVALID OPERATE" is displayed on the LCD. Press the [X] or [Stop] key and try again with the correct key.

(3) When the key operation is normal, the machine returns to the initial state of maintenance mode when the last key is pressed. To cancel operation and return to the initial state of maintenance mode, press the [X] or [Stop] key.

■ Order of pressing keys

DCP-L2500D/L2520D/L2520DW/L2540DN/L2540DW/L2541DW/7080/7080D/7180DN

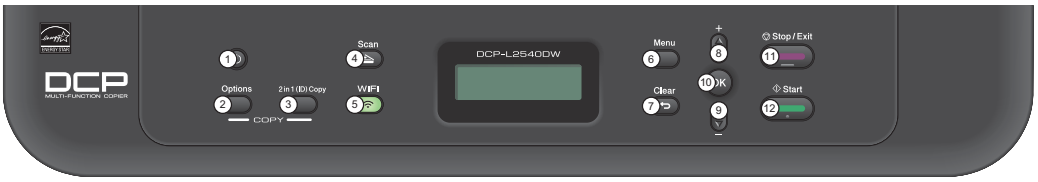

Fig. 5-6

MFC-L2680W/L2685DW/L2700D/L2701D/L2700DN/L2700DW/L2701DW/L2703DW/L2705DW/L2707DW/7380/7480D/7880DN

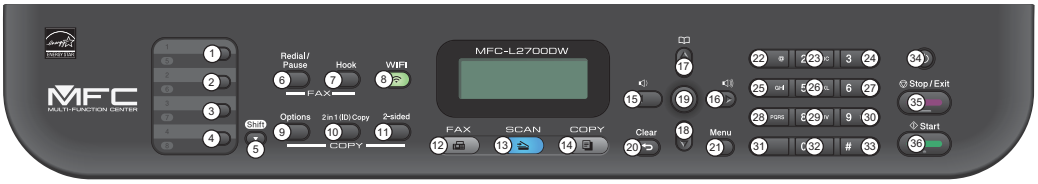

Fig. 5-7

HL-L2380DW, DCP-L2560DW, MFC-L2720DW/L2740DW

Fig. 5-8

1.3.8 Display software version (function code: 25)

<Function>

This function is used to check operation data (version and checksum information) for software parts.

<Operating Procedure>

For models without keypad

(1) Press the [▲] or [▼] key in the initial state of maintenance mode to display "MAINTENANCE 25" on the LCD, and press the [OK] key. "TOTAL:Ver *" is displayed on the LCD.

(2) Pressing the [Start] key changes the display to the next item.

(3) When the [Stop] key is pressed, the machine stops this operation and returns to the initial state of maintenance mode.

For models with keypad

(1) Press the [2], and then the [5] key in the initial state of maintenance mode. "TOTAL:Ver *" is displayed on the LCD.

(2) Pressing the [Start] or [Mono Start] key changes the display to the next item.

(3) When the [X] or [Stop] key is pressed, the machine stops this operation and returns to the initial state of maintenance mode.

LCD	Description
TOTAL: Ver1.00 (A) *1	Main firmware version information ((A): Revision information)
SUB1 : Ver1.00 (P) *1	Sub firmware version information ((P): Identifier for PCL/PS) *2
ENG : Ver1.00	Engine firmware version information
NET : Ver1.00	Network program version information
PNL : T1402261400	Panel firmware version information (Touch panel models only)
PNLB : 11401280100	Panel boot firmware version information (Touch panel models only)
i0801170900:0000	I-FAX version information
B0608071049:5708 *1	Boot program creation date
U0612271600:7B0A *1	Main firmware creation date
D0611301115:E6C3 *1	Demo firmware data creation date
F0612312359:1234 *1	Font firmware creation date
P0612271602:BD40 *1	Sub firmware (PCL/PS) creation date
ROM Check Sum	Check sum self-diagnosis function *3

*1 How to display the check sum information
You can check the check sum information by pressing the [OK] or [SET] key while each version is displayed. When the [OK] or [SET] key is pressed again, the LCD returns to the version display.

*2 (P) indicates that the firmware supports PCL/PS.

*3 There are two types of check sum information that can be checked with this function. This function checks if these two types of check sum information match each other. When the [OK] or [SET] key is pressed while "ROM Check Sum" is displayed, check is automatically conducted for each ROM of each software part. When the check sum matches, "OK" is displayed on the LCD. When all ROMs result in OK, "ROM Check Sum OK" is displayed at the end, and the operation is finished. When the check sum of any ROM does not match, "NG" is displayed, and the display stops.

1.3.9 Change OnePushDemo function setting (function code: 28)

<Function>

This function is used to implement Demo printing by pressing keys, and is mainly used for sales promotion at dealers. This function is disabled once printing is performed from the computer. Change the setting to enable the function.

OnePushDemo = ON (Enabled) / OFF (Disabled)

The setting currently selected is marked "*".

<Operating Procedure>

For models without keypad

(1) Press the [▲] or [▼] key in the initial state of maintenance mode to display "MAINTENANCE 28" on the LCD, and press the [OK] key. "OnePushDemo=ON" is displayed on the LCD.

(2) Press the [▲] or [▼] key to display "OnePushDemo=ON" when enabling this function or "OnePushDemo=OFF" when disabling this function.

(3) Press the [OK] key. The setting currently displayed is saved, and the machine returns to the initial state of maintenance mode.

For models with keypad

(1) Press the [2], and then the [8] key in the initial state of maintenance mode. "OnePushDemo=ON" is displayed on the LCD.

(2) Press the [▲] or [▼] key to display "OnePushDemo=ON" when enabling this function or "OnePushDemo=OFF" when disabling this function.

(3) Press the [SET] or [OK] key. The setting currently displayed is saved, and the machine returns to the initial state of maintenance mode.

Note:

- To cancel operation and return to the initial state of maintenance mode, press the [X] or [Stop] key.
- Once the OnePushDemo function is enabled, this will not be disabled even when printing is performed from the computer as long as the power switch is not turned OFF. However, if the power switch is turned OFF and then ON again after the OnePushDemo function was enabled, this function will be disabled when printing is performed from the computer.

1.3.10 Check sensor operation (function code: 32)

<Function>

This function is used to check that sensors are operating normally.

<Operating Procedure>

For models without keypad

(1) Press the [▲] or [▼] key in the initial state of maintenance mode to display "MAINTENANCE 32" on the LCD, and press the [OK] key.
"C1NTCVRCPORMRA" is displayed on the LCD.

(2) Pressing the [Start] key changes the display to the next item.

For models with keypad

(1) Press the [3], and then the [2] key in the initial state of maintenance mode.
"C1NTCVRCPORMRA" is displayed on the LCD.
400Hz OFF, 400Hz S, 400Hz M, 400Hz L, 1100Hz OFF, 1100Hz S, 1100Hz M, 1100Hz L tones ring continuously to test the speaker.

Note:
- Press the [SET] or [Menu] key to stop the tones.

(2) Pressing the [Start] or [Mono Start] key changes the display to the next item.

The table below summarizes the displays on the LCD, sensor names and detection status.

LCD	Sensor names	Detection status (displayed / not displayed)
C1	Paper feed sensor	Paper tray set / No paper tray
NT	New toner sensor	Toner cartridge set / No toner cartridge
CV	Front cover sensor	Front cover closed / Front cover open
RC	Back cover/duplex tray sensor	Back cover closed with duplex tray set / Back cover open or no duplex tray
PO	Eject sensor	No paper / Paper set
RM	Registration front sensor	No paper / Paper set
RA	Registration rear sensor	No paper / Paper set
MAC XXC	Internal temperature thermistor	XX°C / NG
DF	Document detection sensor	No document / Document set
DR	First side document scanning position sensor	No document / Document set
AC	ADF cover sensor	ADF cover closed / ADF cover open
DB	Second side document scanning position sensor	No document / Document set

Common to models without/with keypad

(3) Change the conditions subject to sensor detection and check that the display on the LCD changes depending on the sensor status. For example, feed the paper through the registration front/rear sensor, open the front cover or back cover, remove the toner cartridge, or create paper jam at the exit.

(4) When you press the [X] or [Stop] key, this operation is finished and the machine returns to the initial state of maintenance mode.

■ Location of sensors

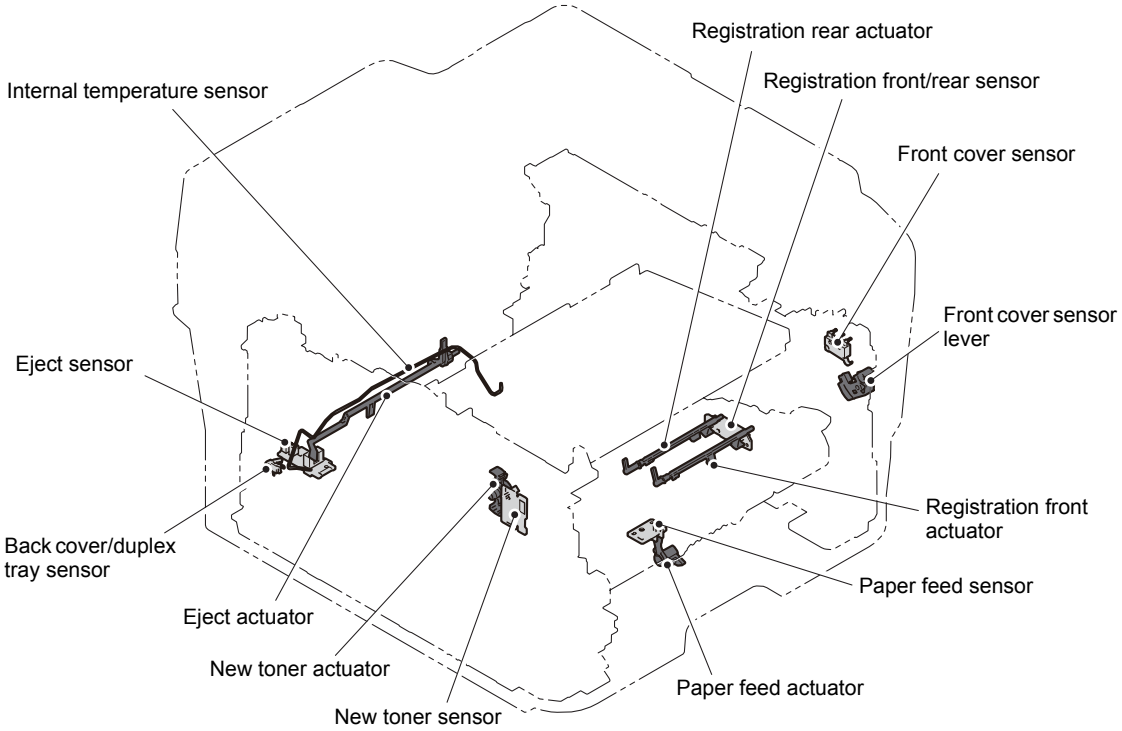

Fig. 5-9

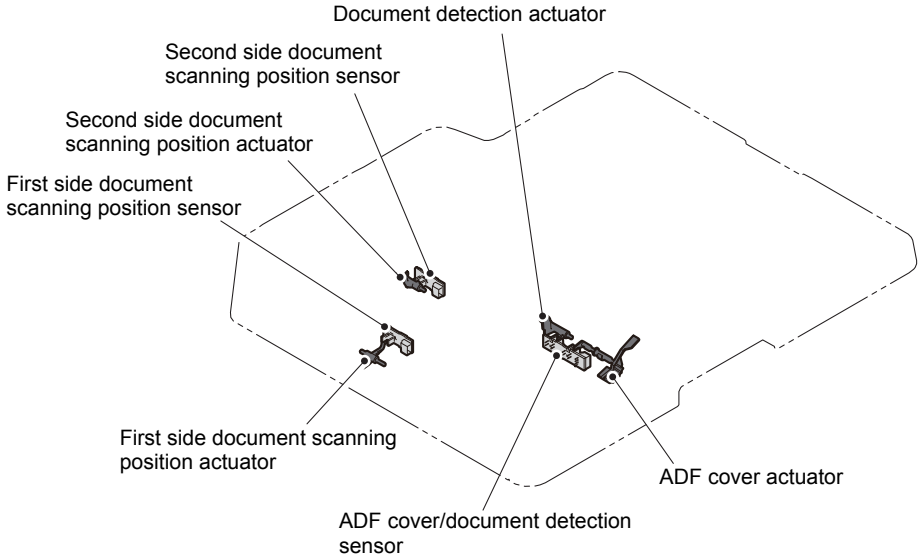

Fig. 5-10

Confidential

1.3.11 Display LAN connection status (function code: 33)

<Function>

This function is used to check the connection status of the wired LAN.

<Operating Procedure>

For models without keypad

(1) Press the [▲] or [▼] key in the initial state of maintenance mode to display "MAINTENANCE 33" on the LCD, and press the [OK] key. One of the following items is displayed on the LCD depending on the wired LAN connection of the machine.

(2) When the [Stop] key is pressed, the machine returns to the initial state of maintenance mode.

For models with keypad

(1) Press the [3] key twice in the initial state of maintenance mode. One of the following items is displayed on the LCD depending on the wired LAN connection of the machine.

(2) When the [X] or [Stop] key is pressed, the machine returns to the initial state of maintenance mode.

LCD	LAN connection status
Active 100B-FD	100B-FD
Active 100B-HD	100B-HD
Active 10B-FD	10B-FD
Active 10B-HD	10B-HD
Inactive	Not connected

Confidential

1.3.12 Set PC print functions (function code: 43)

<Function>

This function is used to change the settings of the various print functions summarized in the table below.

<Operating Procedure>

For models without keypad

(1) Press the [▲] or [▼] key in the initial state of maintenance mode to display "MAINTENANCE 43" on the LCD, and press the [OK] key. "Manual Feed" is displayed on the LCD.

(2) Press the [▲] or [▼] key to display the function you want to change the setting of, and press the [OK] key.

(3) For fixed parameters (On/Off, etc.), press the [▲] or [▼] key to display the setting you want to apply, and press the [OK] key.

(4) When the [Stop] key is pressed, the machine returns to the initial state of maintenance mode.

For models with keypad

(1) Press the [4], and then the [3] key in the initial state of maintenance mode. "Manual Feed" is displayed on the LCD.

(2) Press the [▲] or [▼] key to display the function you want to change the setting of, and press the [SET] or [OK] key.

(3) For fixed parameters (On/Off, etc.), press the [▲] or [▼] key to display the setting you want to apply, and press the [SET] or [OK] key. For parameters requiring numerical value entry, use the keypad to enter a numerical value directly, and press the [SET] or [OK] key.

(4) When the [X] or [Stop] key is pressed, the machine returns to the initial state of maintenance mode.

■ Setting functions

LCD	Description	Set value	Default
Manual Feed	Manual feed setting	On/Off	Off
Resolution	Print resolution	300/600/1,200 dpi	600 dpi
Toner Save	Toner save mode setting	On/Off	Off
Density	Density (printing density) level setting	-6 to 6	0
JB-Can Time	Time until host timeout after a job is canceled	0 to 225 seconds	4 seconds
Sleep Time	Time until sleep mode is entered	0 to 99 minutes	5 minutes
Page Protection	Page memory setting	Off/Letter/A4/Legal/Auto	Off
Emulation	Emulation (print language) setting	Auto/HP/PS	Auto
Auto I/F Time	Interface open time setting	1 to 99 seconds	5 seconds
Media Type	Paper type setting	Thin/Plain/Thick/ Thicker/Trancparency/ Recycled/Bond/ Envlopes/EnvThin/ EnvThick	Plain or Thin
Paper Size	Image development area setting	Letter/Legal/A4/ Executive/ISOB5/JISB5/ A5/ISOB6/A6/Monarch/ C5/COM10/DL/DLL/ A4Long/Postcard/Folio	Letter or A4
Copies	Number of copies	1 to 99 copies	1 copy

LCD	Description	Set value	Default
Orientation	Print direction setting	PortLait/Landscape	Portlait
P-Pos X-Offset	Print position offset in X (landscape) direction	-500 to 500 (1/300 dpi)	0 (1/300 dpi)
P-Pos Y-Offset	Print position offset in Y (portrait) direction	-500 to 500 (1/300 dpi)	0 (1/300 dpi)
Auto FF	Auto Form Feed setting	On/Off	Off
Auto FF Time	Time until Auto Form Feed timeout	1 to 99 seconds	5 seconds
FF Surpress	Blank page skip setting	On/Off	Off
Auto LF	Auto linefeed (LF) setting	On/Off	Off
Auto CR	Auto carriage return (CR) setting	On/Off	Off
Auto WRAP	Auto CRLF by print width	On/Off	Off
Auto Skip	Back end / tip skip setting	On/Off	On
Left Margin	Left margin setting	0 to 145 columns	0 column
Right Margin	Right margin setting	10 to 155 columns	80 columns
Top Margin	Top margin setting	0 to 2.00 inches	0.5 inches
Bottom Margin	Bottom margin setting	0 to 2.00 inches	0.5 inches
Lines	Text lines per page	5 to 128 lines	60 lines
Error Print	Error Print setting in the event of PostScript error	On/Off	On

■ Detail description

LCD	Detail description
Manual Feed	Valid for printing from the computer, and for printing NetWorkConfig, TestPrint, Fontlist, or Configuration from the panel. When the tray is selected on the computer, the setting on the computer supersedes the setting on the LCD.
Resolution	Valid for printing from the computer only. When the resolution is set on the computer, the setting on the computer supersedes the setting on the LCD.
Toner Save	Valid for all types of printing except copy, and the Function Menu setting will also be changed. When the TonerSave is set on the computer, the setting on the computer supersedes the setting on the LCD.
Density	Valid for printing from the computer, and for printing NetWorkConfig, TestPrint, Fontlist, or Configuration from the panel. Linked with the Toner Save setting, and the density is determined based on both settings. When the Density is set on the computer, the setting on the computer supersedes the setting on the LCD.
JB-Can Time	Sets the time until the host timeout after a job is canceled. The setting unit is on the second time scale.
Sleep Time	Sets the time until the sleep mode is entered. The Function Menu setting will also be changed.
Page Protection	Sets the page memory to be secured for data processing before printing in the computer. As this is a setting in the PCL-Core, this does not affect the memory management of the machine.

LCD	Detail description
Emulation	Changes the print language. The Function Menu setting becomes valid. For data with ENTERLANGUAGE, this setting supersedes the setting on the LCD.
Auto I/F Time	Change the interface open time. This setting becomes valid when PC print is instructed, and becomes invalid when PC-Scan or Remote-SetUp is instructed.
Media Type	Valid for printing from the computer only. When the Paper type is set on the computer, the setting on the computer supersedes the setting on the LCD. The default varies depending on the country setting. "Thin" is the default for China and "Plain" is the default for other countries.
Paper Size	Changes the image development area. Sets the drawing size for PC-Print, instead of the setting for Paper Size in the menu. When the Paper size is set on the computer, the setting on the computer supersedes the setting on the LCD. The default varies depending on the country setting. "Letter" is the default for U.S.A. / Canada and "A4" is the default for other countries.
Copies	Valid for printing from the computer only. When the number of copies is set on the computer, the setting on the computer supersedes the setting on the LCD.
Orientation	Changes the printing direction. Valid for printing from the computer only.
P-Pos X-Offset	Sets the print position offset in the X (landscape) direction. Valid for printing from the computer only. When the X-Offset is set on the computer, the setting on the computer supersedes the setting on the LCD.
P-Pos Y-Offset	Sets the print position offset in the Y (portrait) direction. Valid for printing from the computer only. When the Y-Offset is set on the computer, the setting on the computer supersedes the setting on the LCD.
Auto FF	Sets ON or OFF for AutoFF (automatic form feed). Valid for printing from the computer only.
Auto FF Time	Sets the time until timeout after AutoFF is set to ON.
FF Surpress	Sets whether to skip blank pages. Valid for printing from the computer only. On or Off setting of the blank data for copying or faxing cannot be changed in this setting.
Auto LF	Sets the auto linefeed.
Auto CR	Sets the auto carriage return. Adds CR to the LF code.
Auto WRAP	Sets the auto CRLF by the print width.
Auto Skip	Sets whether to skip at the back end / tip of paper. Adds a blank space.
Left Margin	Sets the column space at the left side.
Right Margin	Set the column space at the right side.
Top Margin	Sets the space at the top.
Bottom Margin	Sets the space at the bottom.
Lines	Sets the number of lines in the PCL.
Error Print	Sets the Error Print in the event of a BR-Script 3 error.

1.3.13 Change USB No. return value / Adjust left-end print start position on second side when duplex printing (function code: 45)

■ Change USB No. return value

<Function>

When the operating system (OS) installed on the computer is Windows Vista®, and the machine is connected to this computer using USB2.0FULL, the OS may not be able to obtain the USB device serial number depending on the computer and USB device. If the serial number cannot be obtained, the number of devices increases each time the device is connected to the computer. To avoid this problem, set this function to "USBNo.=ON" and fix the USB No. return value to "0".

LCD	Description
USBNo.= ON	Returns "0".
USBNo.= OFF	Returns the serial number of the machine. (Default)

The setting currently selected is marked "*" at the end of the display.

<Operating Procedure>

For models without keypad

(1) Press the [▲] or [▼] key in the initial state of maintenance mode to display "MAINTENANCE 45" on the LCD, and press the [OK] key. "USBNo." is displayed on the LCD.

(2) Press the [OK] key. "USBNo.=OFF" is displayed on the LCD.

(3) Press the [▲] or [▼] key to select "USBNo.=ON" or "USBNo.=OFF", and then press the [OK] key. "Accepted" is displayed on the LCD, and the machine returns to the initial state of maintenance mode.

(4) Turn OFF the power switch.

For models with keypad

(1) Press the [4], and then the [5] key in the initial state of maintenance mode. "USBNo." is displayed on the LCD.

(2) Press the [Start] or [SET] key. "USBNo.=OFF" is displayed on the LCD.

(3) Press the [▲] or [▼] key to select "USBNo.=ON" or "USBNo.=OFF", and then press the [Start] or [SET] key. "Accepted" is displayed on the LCD, and the machine returns to the initial state of maintenance mode.

(4) Turn OFF the power switch.

Note:

- This mode is applied after the power switch is turned OFF and then ON again.

■ Adjust left-end print start position on second side when duplex printing

<Function>

In the event that the left-end print start position deviates on the second side when duplex printing, use this function to adjust the position left and right. The adjustable range is -100 to 750 (unit: 300 dpi). (Shifted to left when the value is negative)

<Operating Procedure>

For models without keypad

(1) Press the [▲] or [▼] key in the initial state of maintenance mode to display "MAINTENANCE 45" on the LCD, and press the [OK] key.

(2) Press the [▲] or [▼] key to display "DX.XAdjust" on the LCD, and press the [OK] key. "DX.XAdjust=**" is displayed on the LCD.

(3) To shift the writing start position to the left, press the [▲] key to decrease the value. To shift the position to the right, press the [▼] key to increase the value.

(4) Press the [OK] key after adjusting the value. "Accepted" is displayed on the LCD, and the machine returns to the initial state of maintenance mode.

For models with keypad

(1) Press the [4], and then the [5] key in the initial state of maintenance mode. "USBNo." is displayed on the LCD.

(2) Press the [▲] or [▼] key to display "DX.XAdjust" on the LCD, and press the [Start] or [SET] key. "DX.XAdjust=**" is displayed on the LCD.

(3) To shift the writing start position to the left, press the [▲] key to decrease the value. To shift the position to the right, press the [▼] key to increase the value.

(4) Press the [Start] or [SET] key after adjusting the value. "Accepted" is displayed on the LCD, and the machine returns to the initial state of maintenance mode.

1.3.14 Set country / language (function code: 52)

<Function>

This function is user accessible, and is used to customize the EEPROM according to the language, function settings, and firmware switch settings.

Note:

- This function can be used only in the following nations: Around France, Pan-Nordic, East Europe, and Iberia.

<Operating Procedure>

For models without keypad

(1) Press the [▲] or [▼] key in the initial state of maintenance mode to display "MAINTENANCE 52" on the LCD, and press the [OK] key. "Set Country" is displayed on the LCD.

(2) Press the [▲] or [▼] key to select the country to be shipped, and then press the [OK] key.

(3) Press the [▼] key. The new setting is saved. Once the saving is completed, the machine returns to the ready state.

For models with keypad

(1) Press the [5], and then the [2] key in the initial state of user maintenance mode. "Set Country" is displayed on the LCD.

(2) Select the country to be shipped, and then press the [SET] or [OK] key.

(3) Press the [Yes] key. The new setting is saved. Once the saving is completed, the machine returns to the ready state.

Around France	ITALY/IBERIA	PAN-NOLDIC	CEE	Middle East And North Africa
France	Italia	Norge	Ceska republika	M.East & Africa
België / Belgique	España	Sverige	Magyarorsazág	Türkiye
Nederland	Portugal	Suomi	POLSKA	
		Danmark	България	
		Others	România	
			Slovensko	
			Slovenija	
			Hrvatska	
			Others	

1.3.15 Transfer received fax data / log information (function code: 53) (fax models only)

<Function>

When the machine is unable to print the received fax data due to an error in the printing mechanism, this function is used to transfer the data to another machine. The communication management report, communication list, or machine log information can also be transferred.

Note:

- The number of files that can be transferred in one operation is up to 99. When there are 100 or more files, the operation procedure below must be performed several times to transfer all files.
- When there are both color data files and monochrome data files, monochrome data files are transferred first. When the color function is not supported by the receiver machine, color data files cannot be transferred and an error occurs.

<Operating Procedure>

(1) Press the [5], and then the [3] key in the initial state of maintenance mode. "FAX TRANSFER" is displayed on the LCD.

- To check the number of files received, press the [1] key.
  "1. NO. OF JOBS" is displayed on the LCD.
  Press the [SET] or [OK] key, and the number of files received is displayed, for example, "NO. OF JOBS: 10".
- To transfer only the communication management report, press the [2] key.
  "2. ACTIVITY" is displayed on the LCD.
- To transfer the received data, press the [3] key.
  (The communication management report is also transferred.)
  "3. DOCUMENTS" is displayed on the LCD. If there are no received files, "NO DOCUMENTS" is displayed.
- To transfer the communication list (latest communication information), press the [4] key.
  "4. COM.LIST (NEW)" is displayed on the LCD.
- To transfer the communication list (information for the past three errors), press the [5] key.
  "5. COM.LIST (ERR3)" is displayed on the LCD.
- To transfer the maintenance information (list printed by function code 77), press the [6] key.
  "6. MNT77LIST" is displayed on the LCD.

(2) Press the [SET] or [OK] key while either "2.ACTIVITY", "3.DOCUMENTS", "4.COM.LIST (NEW)", "5.COM.LIST (ERR3)", or "6.MNT77LIST" is displayed on the LCD. "ENTER NO. & SET" is displayed on the LCD.

(3) Enter the telephone number of the receiver machine, and press the [SET] or [OK] key again.

(4) "ACCEPTED" is displayed for approximately two seconds, and the machine starts dialing to transfer the received data.

Note:

- Be sure to enter the telephone number directly using the numerical keys. One-touch dialing is not allowed in this procedure.
- No station ID will be attached to the data to be transferred. Instead, a cover page and end page as shown on the next page will be automatically attached.

Cover page example

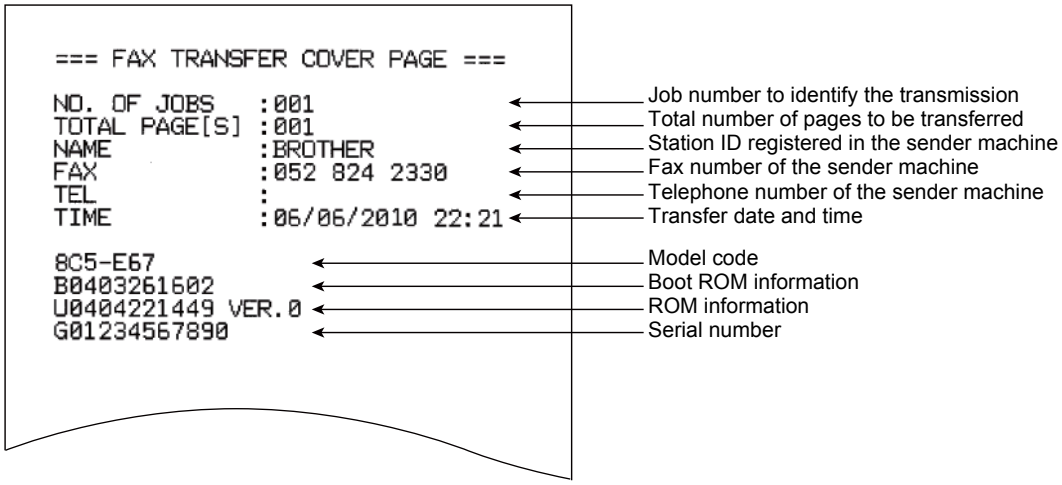

Fig. 5-11

End page example

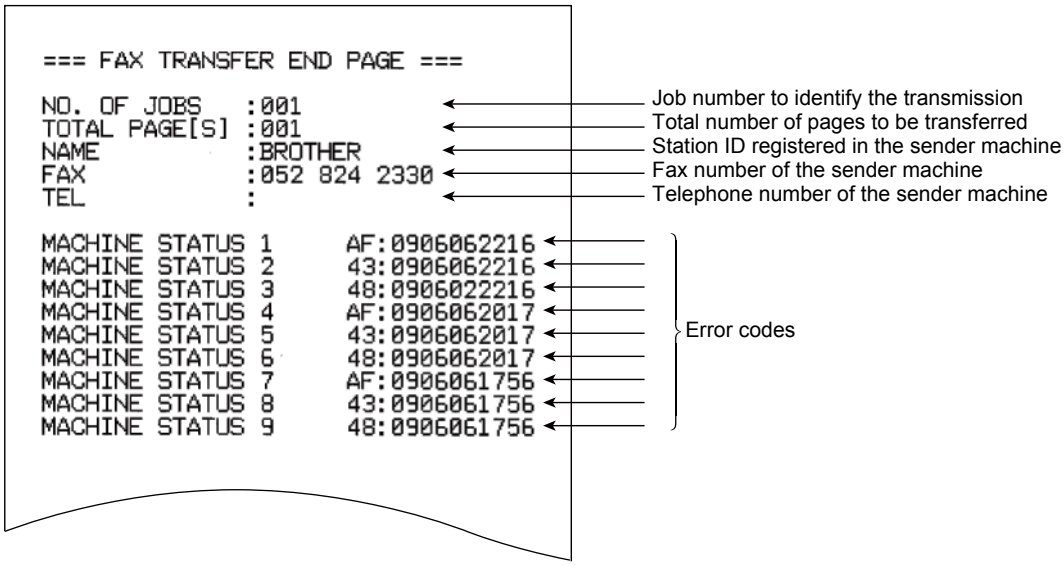

Fig. 5-12

1.3.16 Fine-tune scanning position (function code: 54)

<Function>

This function is used to adjust the scanning start/end positions.

<Operating Procedure>

For models without keypad

(1) Press the [▲] or [▼] key in the initial state of maintenance mode to display "MAINTENANCE 54" on the LCD, and press the [OK] key. For duplex scanning models, "▲ : ADF ▼ : FB" is displayed on the LCD. To adjust the ADF scanning position, press the [▲] key. To adjust the FB scanning position, press the [▼] key and proceed to the procedure (2).
For single-side scanning models, proceed to procedure (2).

(2) To increase the adjustment value, press the [▲] key. To decrease the adjustment value, press the [▼] key.

Note:
- When the [Stop] key is pressed, the machine stops correcting the adjusting value and returns to the initial state of maintenance mode.

(3) Press the [OK] key after adjusting the value. "ACCEPTED" is displayed on the LCD, and the machine returns to the initial state of maintenance mode.

For models with keypad

(1) Press the [5], and then the [4] key in the initial state of maintenance mode. For duplex scanning models, "▲ : ADF ▼ : FB" is displayed on the LCD. To adjust the ADF scanning position, press the [▲] key. To adjust the FB scanning position, press the [▼] key and proceed to the procedure (2).
For single-side scanning models, proceed to procedure (2).

(2) To increase the adjustment value, press the [▲] key. To decrease the adjustment value, press the [▼] key.

Note:
- When the [X] or [Stop] key is pressed, the machine stops correcting the adjusting value and returns to the initial state of maintenance mode.

(3) Press the [SET] or [OK] key after adjusting the value. "ACCEPTED" is displayed on the LCD, and the machine returns to the initial state of maintenance mode.

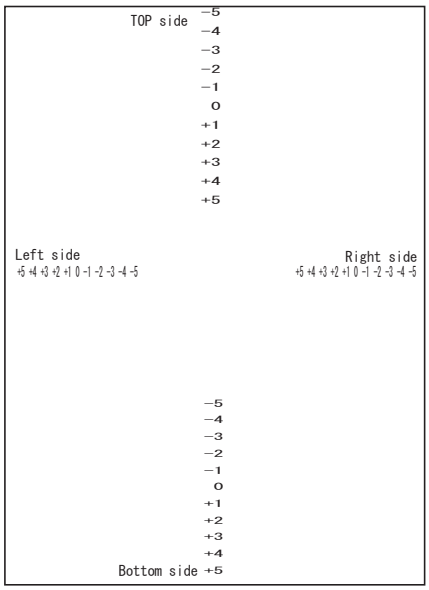

Fig. 5-13

Confidential

1.3.17 Acquire white level data and set CIS scan area (function code: 55)

<Function>

This function is used to acquire the white level of the CIS unit, and store this data and the scan area in the EEPROM of the main PCB.

<Operating Procedure>

For models without keypad

(1) Press the [▲] or [▼] key in the initial state of maintenance mode to display "MAINTENANCE 55" on the LCD, and press the [OK] key. "Press START" is displayed on the LCD.

(2) Press the [Start] key. "SCANNER AREA SET" is displayed on the LCD, and the white level data is obtained.

(3) After several seconds, the compensation value for the white level data/scanning width is stored in the EEPROM, and the machine returns to the initial state of maintenance mode. If any error is detected during this operation, "SCANNER ERROR" is displayed on the LCD for single-side scanning models, and "SCANNER ERR ADF" or "SCANNER ERR FB" is displayed for duplex scanning models. Pressing the [Stop] key in this occasion returns the machine to the initial state of maintenance mode.

For models with keypad

(1) Press the [5] key twice in the initial state of maintenance mode. "Press START" is displayed on the LCD.

(2) Press the [Start] or [Mono Start] key. "SCANNER AREA SET" is displayed on the LCD, and the white level data is obtained.

(3) After several seconds, the compensation value for the white level data/scanning width is stored in the EEPROM, and the machine returns to the initial state of maintenance mode. If any error is detected during this operation, "SCANNER ERROR" is displayed on the LCD for single-side scanning models, and "SCANNER ERR ADF" or "SCANNER ERR FB" is displayed for duplex scanning models. Pressing the [X] or [Stop] key in this occasion returns the machine to the initial state of maintenance mode.

1.3.18 Adjust touch panel (function code: 61)

<Function>

This function is used to adjust the touch panel.

Note:

- This adjustment requires a touch panel stylus with a thin tip. A commercially available stylus designed for electronic dictionaries or personal digital assistance (PDA) can be used. If one is not available at hand, order a "STYLUS" from Brother's parts list.

<Operating Procedure>

(1) Press the [6], and then the [1] key in the initial state of maintenance mode. The adjustment screen shown below appears on the LCD.

(2) Use a touch panel stylus and touch the center on the mark at the upper left corner of the screen. The mark disappears when touched, then touch the mark at the lower left. Similarly touch the mark at the lower right, upper right and center.

Note:

- Do not use any tools other than a touch panel stylus. In particular, never use a pointed tool (e.g. screwdriver). Using such a tool will damage the touch panel.
- Do not touch the touch panel with your fingers. The contact area of a finger is too large to adjust the touch panel precisely.
- If no operation is performed for one minute or the [X] key is pressed, the machine returns to the initial state of maintenance mode.

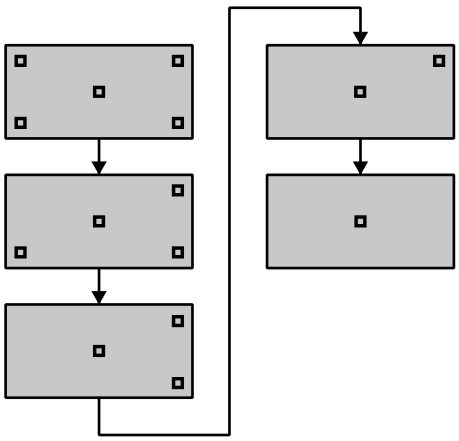

Fig. 5-14

(3) When the center (5th mark) is touched, "OK" is displayed on the LCD if the specified area is adjusted correctly. The machine returns to the initial state of maintenance mode.

Note:

- If "NG" is still displayed on the LCD even after this operation is repeated two to three times, check the connection of the touch panel flat cable. If the LCD keeps displaying "NG" even there is no problem, replace the panel unit.

1.3.19 Continuous print test (function code: 67)

<Function>

This function is used to conduct paper feed and eject tests while printing patterns.

<Operating Procedure>

For models without keypad

(1) Press the [▲] or [▼] key in the initial state of maintenance mode to display "MAINTENANCE 67" on the LCD, and press the [OK] key. "SELECT: K 100%" is displayed on the LCD.

(2) Refer to the <Print pattern> table, press the [▲] or [▼] key to select the print pattern, and press the [OK] key. "SELECT: A4" is displayed on the LCD.

(3) Refer to the <Paper size> table, press the [▲] or [▼] key to select the paper size, and press the [OK] key. "SELECT: PLAIN" is displayed on the LCD.

(4) Refer to the <Print specification> table, press the [▲] or [▼] key to select the media specification, and press the [OK] key. "SELECT: TRAY1 SX" is displayed on the LCD.

(5) Refer to the <Print type> table, press the [▲] or [▼] key to select the print type, and press the [OK] key. "SELECT: 1PAGE" is displayed on the LCD.

(6) Refer to the <Print page> table, press the [▲] or [▼] key to select the pages printing, and press the [OK] key. For intermittent pattern printing, "SELECT: 1P/JOB" is displayed on the LCD. For other printing, proceed to the procedure (8).

(7) Refer to the <Number of pages per job> table, press the [▲] or [▼] key to select the number of pages for 1 job, and press the [OK] key. (Only for intermittent pattern printing)

(8) "PAPER FEED TEST" is displayed on the LCD, and printing test pattern starts using the selected conditions.

(9) When you press the [Stop] key, test pattern printing is stopped, and the machine returns to the initial state of maintenance mode.

For models with keypad

(1) Press the [6], and then the [7] key in the initial state of maintenance mode. "SELECT: K 100%" is displayed on the LCD.

(2) Refer to the <Print pattern> table, press the [▲] or [▼] key to select the print pattern, and press the [SET] or [OK] key. "SELECT: A4" is displayed on the LCD.

(3) Refer to the <Paper size> table, press the [▲] or [▼] key to select the paper size, and press the [SET] or [OK] key. "SELECT: PLAIN" is displayed on the LCD.

(4) Refer to the <Print specification> table, press the [▲] or [▼] key to select the media specification, and press the [SET] or [OK] key. "SELECT: TRAY1 SX" is displayed on the LCD.

(5) Refer to the <Print type> table, press the [▲] or [▼] key to select the print type, and press the [SET] or [OK] key. "SELECT: 1PAGE" is displayed on the LCD.

(6) Refer to the <Print page> table, press the [▲] or [▼] key to select the print page, and press the [SET] or [OK] key. For intermittent pattern printing, "SELECT: 1P/JOB" is displayed on the LCD. For other printing, move on to the procedure (8).

(7) Refer to the <Number of pages per job> table, press the [▲] or [▼] key to select the number of pages for 1 job, and press the [SET] or [OK] key. (Only for intermittent pattern printing)

(8) "PAPER FEED TEST" is displayed on the LCD, and printing test pattern starts using the selected conditions.

(9) When you press the [X] or [Stop] key, test pattern printing is stopped, and the machine returns to the initial state of maintenance mode.

<Print pattern>

LCD	Description
SELECT:K 100%	100% solid printing
SELECT:W 100%	No printing
SELECT:K 1%	1% intermittent pattern printing *
SELECT:K 5%	5% intermittent pattern printing *
SELECT:Lattice	Lattice printing
SELECT:Total	Print total pattern

* For job printing, up to 500 sheets for single-side printing, and 1,000 pages for duplex printing.

<Paper size>

LCD	Description
SELECT:A4	A4
SELECT:LETTER	Letter
SELECT:ISOB5	ISO B5
SELECT:JISB5	JIS B5
SELECT:A5	A5
SELECT:A5L	A5L
SELECT:JISB6	JIS B6
SELECT:A6	A6
SELECT:EXECUTE	Executive size
SELECT:LEGAL	Legal size
SELECT:FOLIO	Folio size
SELECT:HAGAKI	Postcard size

<Print specification>

LCD	Description
SELECT:PLAIN	Plain paper
SELECT:THICK	Plain paper (thick)
SELECT:THIN	Plain paper (thin)
SELECT:THICKER	Plain paper (thicker)
SELECT:RECYCLED	Recycled paper
SELECT:BOND	Bond paper
SELECT:LABEL	Label
SELECT:ENVELOPE	Envelope
SELECT:ENVTHIN	Envelope (thin)
SELECT:ENVTHICK	Envelope (thick)
SELECT:HAGAKI	Postcard

<Print type>

LCD	Description
SELECT:TRAY1 SX	Single-side printing from paper tray
SELECT:TRAY1 DX	Duplex printing from paper tray
SELECT:MF SX	Single-side printing from manual feed tray
SELECT:MF DX	Duplex printing from manual feed tray

<Print page>

LCD	Description
SELECT:1PAGE	1-page printing
SELECT:CONTINUE	Continuous printing
SELECT:JOB	Intermittent printing per job

Confidential

<Number of pages per job>

LCD	Description
SELECT:1P/JOB	Prints 1 page per job
SELECT:2P/JOB	Prints 2 pages per job
SELECT:5P/JOB	Prints 5 pages per job

■ Print pattern

SELECT: K 100%

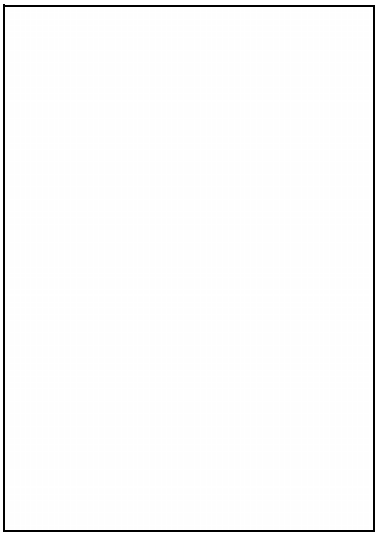

SELECT: W 100%

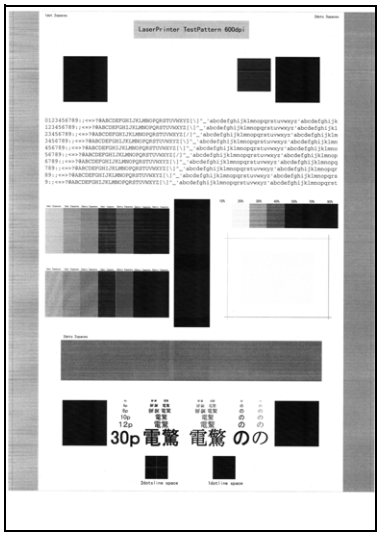

SELECT: Total

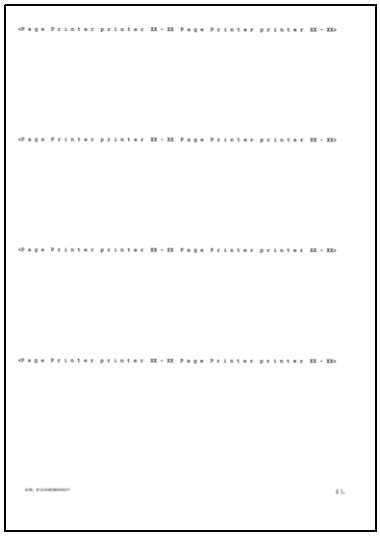

SELECT: K 1%

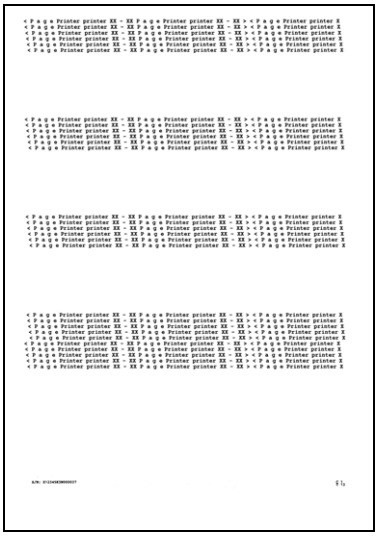

SELECT: K 5%

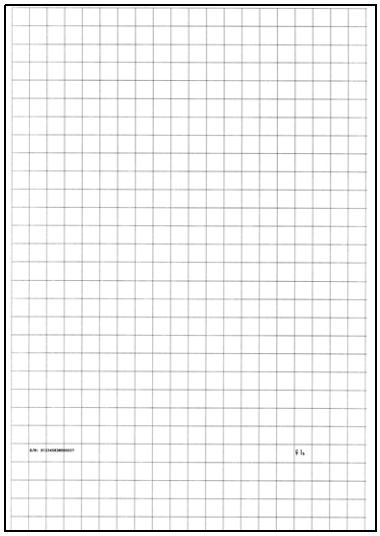

SELECT: Lattice

Fig. 5-15

Confidential

1.3.20 Print frame pattern (single-side printing) (function code: 69)

<Function>

This function is used to print the frame pattern on a single side of the paper to check for printing flaws and omission.

<Operating Procedure>

For models without keypad

(1) Set the paper specified in the default paper settings (A4 or Letter) to the paper tray.

(2) Press the [▲] or [▼] key in the initial state of maintenance mode to display "MAINTENANCE 69" on the LCD, and press the [OK] key. "PRINTING" is displayed on the LCD, and the frame pattern (refer to the figure below) is printed on a single side of the paper.

(3) When printing is completed, "WAKU SX" is displayed on the LCD.

(4) When the [Stop] key is pressed, the machine stops this operation and returns to the initial state of maintenance mode.

For models with keypad

(1) Set the paper specified in the default paper settings (A4 or Letter) to the paper tray.

(2) Press the [6], and then the [9] key in the initial state of maintenance mode. "PRINTING" is displayed on the LCD, and the frame pattern (refer to the figure below) is printed on a single paper.

(3) When printing is completed, "WAKU SX" is displayed on the LCD.

(4) When the [X] or [Stop] key is pressed, the machine stops this operation and returns to the initial state of maintenance mode.

Note:

- If printing fails, printing is stopped with displaying any of the errors shown in the table below. To retry printing, refer to the "Remedy" in the table below to eliminate the error cause, and press the [Start] or [Mono Start] key. "PRINTING" is displayed on the LCD, and the frame pattern is printed on a single sheet of the paper.

Error display	Remedy
Replace Toner	Replace the empty toner cartridge and press the [Start] key to release the error.
Cover is Open	Close the front cover.
No Paper	Refill the paper tray and close it. And then press the [Start] key to release the error.
Jam Tray1	Remove the jammed paper, close the paper tray and all covers, and press the [Start] key to release the error.
Jam Rear	

■ Frame pattern

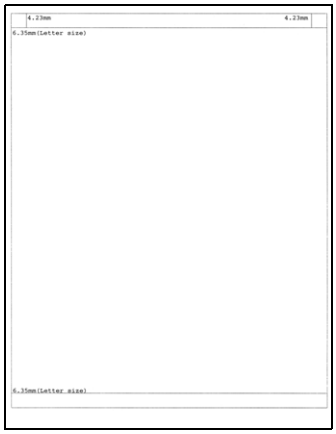

Fig. 5-16

1.3.21 Print frame pattern (duplex printing) (function code: 70)

<Function>

This function is used to print the frame pattern on both sides of the paper to check for printing flaws and omission.

<Operating Procedure>

For models without keypad

(1) Set the paper specified in the default paper settings (A4 or Letter) to the paper tray.

(2) Press the [▲] or [▼] key in the initial state of maintenance mode to display "MAINTENANCE 70" on the LCD, and press the [OK] key. "PRINTING" is displayed on the LCD, and the frame pattern (refer to the figure below) is printed on a single paper.

(3) When printing is completed, "WAKU DX" is displayed on the LCD.

(4) When the [Stop] key is pressed, the machine stops this operation and returns to the initial state of maintenance mode.

For models with keypad

(1) Set the paper specified in the default paper settings (A4 or Letter) to the paper tray.

(2) Press the [7], and then the [0] key in the initial state of maintenance mode. "PRINTING" is displayed on the LCD, and the frame pattern (refer to the figure below) is printed on a single paper.

(3) When printing is completed, "WAKU DX" is displayed on the LCD.

(4) When the [X] or [Stop] key is pressed, the machine stops this operation and returns to the initial state of maintenance mode.

Note:

- If printing fails, printing is stopped with displaying any of the errors shown in the table below. To retry printing, refer to the "Remedy" in the table below to eliminate the error cause, and press the [Start] or [Mono Start] key. "PRINTING" is displayed on the LCD, and the frame pattern is printed on a single sheet of the paper.

Error display	Remedy
Replace Toner	Replace the toner cartridge and press the [Start] key to release the error.
Cover is Open	Close the front cover.
No Paper	Refill the paper and close the paper tray. And then press the [Start] key to release the error.
Jam Tray1	Remove the jammed paper, close the paper tray and all covers, and press the [Start] key to release the error.
Jam Rear	
Duplex Disabled	Refill the paper, close the tray and all covers, and press the [Start] key to release the error.

■ Frame pattern

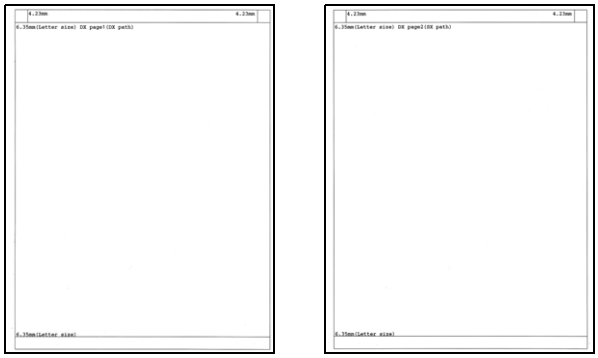

First side　　Second side

Fig. 5-17

1.3.22 Print test pattern (function code: 71)

<Function>

This function is used to print the test pattern to check whether the developer roller or exposure drum is dirty or damaged.

<Operating Procedure>

For models without keypad

(1) Press the [▲] or [▼] key in the initial state of maintenance mode to display "MAINTENANCE 71" on the LCD, and press the [OK] key. "SELECT: LETTER" is displayed on the LCD.

(2) Refer to the <Paper size> table, press the [▲] or [▼] key to select the paper size, and press the [OK] key. "SELECT: PLAIN" is displayed on the LCD.

(3) Refer to the <Print specification> table, press the [▲] or [▼] key to select the media specification, and press the [OK] key. "SELECT: SX" is displayed on the LCD.

(4) Refer to the <Print type> table, press the [▲] or [▼] key to select the print type, and press the [OK] key. "SELECT: 1PAGE" is displayed on the LCD.

(5) Refer to the <Print page> table, press the [▲] or [▼] key to select the print page, and press the [OK] key. "PRINTING" is displayed on the LCD, and printing test pattern starts using the selected conditions.

(6) When printing is completed, "2D3S K" is displayed on the LCD, and it returns to the printing pattern display. Press the [OK] key to perform this again.

(7) When the [Stop] key is pressed, the machine returns to the initial state of maintenance mode.

For models with keypad

(1) Press the [7], and then the [1] key in the initial state of maintenance mode. "SELECT: LETTER" is displayed on the LCD.

(2) Refer to the <Paper size> table, press the [▲] or [▼] key to select the paper size, and press the [SET] or [OK] key. "SELECT: PLAIN" is displayed on the LCD.

(3) Refer to the <Print specification> table, press the [▲] or [▼] key to select the media specification, and press the [SET] or [OK] key. "SELECT: SX" is displayed on the LCD.

(4) Refer to the <Print type> table, press the [▲] or [▼] key to select the print type, and press the [SET] or [OK] key. "SELECT: 1PAGE" is displayed on the LCD.

(5) Refer to the <Print page> table, press the [▲] or [▼] key to select the print page, and press the [SET] or [OK] key. "PRINTING" is displayed on the LCD, and printing test pattern starts using the selected conditions.

(6) When printing is completed, "2D3S K" is displayed on the LCD, and it returns to the printing pattern display. Press the [Start] or [Mono Start] key to perform this again.

(7) When the [X] or [Stop] key is pressed, the machine returns to the initial state of maintenance mode.

Note:

- If printing fails, printing is stopped with displaying any of the errors shown in the <Error display> table. To retry printing, refer to the "Remedy" in the table to eliminate the error cause, and press the [Start] or [Mono Start] key. "PRINTING" is displayed on the LCD, and the color test pattern is printed.

<Paper size>

LCD	Description
SELECT:LETTER	Letter
SELECT:A4	A4
SELECT:ISOB5	ISO B5
SELECT:JISB5	JIS B5
SELECT:A5	A5
SELECT:A5L	A5L
SELECT:JISB6	JIS B6
SELECT:A6	A6
SELECT:EXECUTE	Executive size
SELECT:LEGAL	Legal size
SELECT:FOLIO	Folio size
SELECT:HAGAKI	Postcard size

<Print specification>

LCD	Description
SELECT:PLAIN	Plain paper
SELECT:THICK	Plain paper (thick)
SELECT:THIN	Plain paper (thin)
SELECT:THICKER	Plain paper (thicker)
SELECT:RECYCLED	Recycled paper
SELECT:BOND	Bond paper
SELECT:LABEL	Label
SELECT:ENVELOPE	Envelope
SELECT:ENVTHIN	Envelope (thin)
SELECT:ENVTHICK	Envelope (thick)
SELECT:GLOSSY	Glossy paper
SELECT:HAGAKI	Postcard

<Print type>

LCD	Description
SELECT: SX	Single-side printing from paper tray 1
SELECT: DX	Duplex printing from paper tray 1

<Print page>

LCD	Description
SELECT:1PAGE	1-page printing
SELECT:CONTINUE	Continuous printing

<Error display>

LCD	Remedy
Replace Toner	Replace the empty toner cartridge and press the [Start] key to release the error.
Cover is Open	Close the front cover.
No Paper	Refill the paper and close the paper tray. And then press the [Start] key to release the error.
Jam Tray1	Remove the jammed paper, close the paper tray and all covers, and press the [Start] key to release the error.
Jam Rear	

Confidential

■ Test pattern

2D3S K

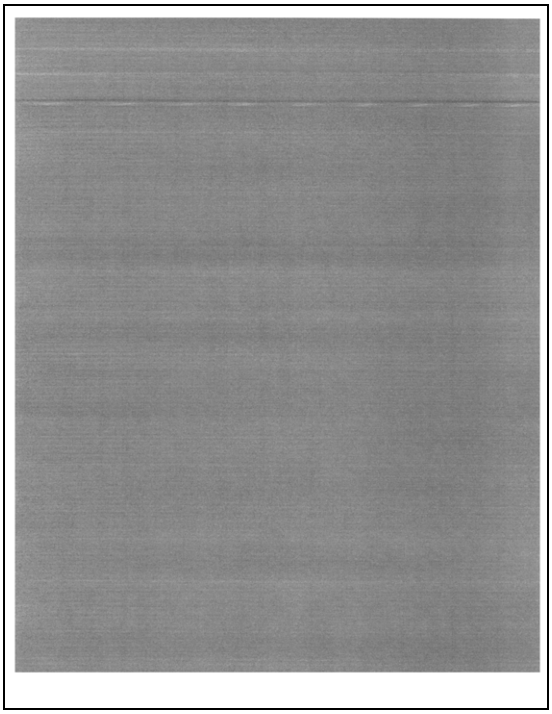

Fig. 5-18

Confidential

1.3.23 Setting by spec (function code: 74)

<Function>

This function is used to customize the machine according to language, function settings, and worker switch settings.

<Operating Procedure>

For models without keypad

(1) Press the [▲] or [▼] key in the initial state of maintenance mode to display "MAINTENANCE 74" on the LCD, and press the [OK] key. The country code currently set is displayed on the LCD. (The first digit is flashing.)

(2) Press the [▲] key to enter "1", or the [▼] key to enter "0". Then press the [OK] key. The second digit starts to flash.

(3) Press the [▲] key to enter "1", or the [▼] key to enter "0" similarly. Then press the [OK] key. The second digit is completed and the third and fourth digit starts to flash.

(4) The third digit and fourth digit changes at once when the [▲] or [▼] key is pressed. Press the [Start] key when the desired value is shown on the screen. The new setting is saved, and "PARAMETER INIT" is displayed on the LCD. The machine then returns to the initial state of maintenance mode.

For models with keypad

(1) Press the [7], and then the [4] key in the initial state of maintenance mode. The country code currently set is displayed on the LCD.

(2) Enter the country code (four digits) you want to set.

(3) Pressing the [Start] or [Mono Start] key saves the new setting and "PARAMETER INIT" is displayed on the LCD. The machine then returns to the initial state of maintenance mode.

Note:

- If there is no entry for one minute or longer, the machine returns to the initial state of maintenance mode automatically, regardless of the display status.

■ Setting by spec code list

MODEL	Country Code		Country Code (Detail)	
DCP-7080	China	0020	-	-
DCP-7080D	China	0120	-	-
DCP-7180DN	China	0020	-	-
DCP-L2500D	CEE-General	1004	-	-
	France/Belgium/ Netherlands	1055	Belgium	1008
			France	1004
			Netherlands	1004
	Germany	3053	Austria	3014
			Germany	3003
	Iberia	1004	-	-
	Italy	1004	-	-
	Pan-Nordic	1004	-	-
	Switzerland	1004	-	-
	UK	1004	-	-
DCP-L2500DR	Russia	5004	-	-
DCP-L2520D	India	0045	-	-
	Malaysia	0040	-	-
	Vietnum	0040	-	-
DCP-L2520DW	Brazil	0042	-	-
	Canada	0002	-	-
	CEE-General	1004	-	-
	France/Belgium/ Netherlands	1055	Belgium	1008
			France	1004
			Netherlands	1004
	Germany	3053	Austria	3014
			Germany	3003
	Iberia	1004	-	-
	Pan-Nordic	1004	-	-
	Switzerland	1004	-	-
	U.S.A	0001	-	-
	UK	1004	-	-
DCP-L2520DWR	Russia	5004	-	-
DCP-L2540DN	CEE-General	1004	-	-
	France/Belgium/ Netherlands	1055	Belgium	1008
			France	1004
			Netherlands	1004
	Germany	3053	Austria	3014
			Germany	3003
	Iberia	1004	-	-
	Italy	1004	-	-
	Pan-Nordic	1004	-	-
	UK	1004	-	-
DCP-L2540DNR	Russia	5004	-	-
DCP-L2540DW	Argentina	0136	-	-
	Brazil	0142	-	-
	Canada	0102	-	-
	Chile	0136	-	-
	India	0145	-	-
	Indonesia	0129	-	-
	Malaysia	0140	-	-
	MENA	0141	-	-
	Peru	0136	-	-
	Philippines	0121	-	-
	Thailand	0140	-	-
	Taiwan	0123	-	-
	UAE	0141	-	-
	U.S.A	0101	-	-

Note:

- This code list is current as of May 2017.

Please contact Brother distributors for the latest information.

Confidential

MODEL	Country Code		Country Code (Detail)	
DCP-L2541DW	India	0145	—	—
DCP-L2560DW	CEE-General	1004	—	—
	France/Belgium/ Netherlands	1055	Belgium	1008
			France	1004
			Netherlands	1004
	Germany	3053	Austria	3014
			Germany	3003
	Pan-Nordic	1004	—	—
	Switzerland	1004	—	—
DCP-L2560DWR	Russia	5004	—	—
HL-L2380DW	Australia	0106	—	—
	Canada	0102	—	—
	New Zealand	0127	—	—
	U.S.A	0101	—	—
MFC-7380	China	0020	—	—
MFC-7480D	China	0120	—	—
MFC-L2680W	U.S.A	0101	—	—
MFC-L2685DW	U.S.A	0301	—	—
MFC-L2700D	Indonesia	0029	—	—
	Korea	0044	—	—
	Malaysia	0040	—	—
	Middle East And North Africa	0076	Gulf	0041
			Turkey	0025
	Philippines	0021	—	—
	South Africa	0024	—	—
	Taiwan	0023	—	—
	Thailand	0040	—	—
	UAE	0041	—	—
MFC-L2701D	India	0045	—	—
	Vietnam	0019	—	—
MFC-L2700DN	CEE-General	0288	Bulgaria	0232
			Croatia	0281
			Czecho	0237
			Hungary	0238
			Poland	0239
			Romania	0233
			Slovakia	0286
			Slovenia	0282
			Others	0250
	France	0205	—	—
	Germany	0253	Austria	0214
			Germany	0203
	Italy	0216	—	—
	Israel	0217	—	—
	Poland	0239	—	—
	Switzerland	0210	—	—
	UK	0204	—	—
MFC-L2700DNR	Russia	0248	—	—

Note:

- This code list is current as of May 2017.
  Please contact Brother distributors for the latest information.

MODEL	Country Code		Country Code (Detail)	
MFC-L2700DW	Australia	0006	—	—
	Belgium	0008	—	—
	Brazil	0042	—	—
	Canada	0002	—	—
	CEE-General	0088	Bulgaria	0032
			Croatia	0081
			Czecho	0037
			Hungary	0038
			Poland	0039
			Romania	0033
			Slovakia	0086
			Slovenia	0082
			Others	0050
	Chile	0036	—	—
	France	0005	—	—
	Germany	0053	Austria	0014
			Germany	0003
	Iberia	0065	Portugal	0018
			Spain	0015
	Indonesia	0029	—	—
	Israel	0017	—	—
	Italy	0016	—	—
	Korea	0044	—	—
	Malaysia	0040	—	—
	Middle East And North Africa	0076	Gulf	0041
			Turkey	0025
	Netherlands	0009	—	—
	New Zealand	0027	—	—
	Pan-Nordic	0057	Denmark	0013
			Finland	0012
			Norway	0007
			Sweden	0026
			Others	0050
	Peru	0036	—	—
	Philippines	0021	—	—
	Poland	0039	—	—
	South Africa	0024	—	—
	Switzerland	0010	—	—
	Taiwan	0023	—	—
	Thailand	0040	—	—
	U.S.A	0001	—	—
	UAE	0041	—	—
	UK	0004	—	—

Note:

- This code list is current as of May 2017.
  Please contact Brother distributors for the latest information.

MODEL	Country Code		Country Code (Detail)	
MFC-L2700DWR	Russia	0048	—	—
MFC-L2701DW	India	0045	—	—
	Vietnam	0019	—	—
MFC-L2703DW	Australia	0106	—	—
MFC-L2705DW	U.S.A	0201	—	—
MFC-L2707DW	U.S.A	0301	—	—
MFC-7880DN	China	0020	—	—
MFC-L2720DW	Argentina	0036	—	—
	Australia	0006	—	—
	Brazil	0042	—	—
	Canada	0002	—	—
	CEE-General	0088	Bulgaria	0032
			Croatia	0081
			Czecho	0037
			Hungary	0038
			Poland	0039
			Romania	0033
			Slovakia	0086
			Slovenia	0082
			Others	0050
	France/Belgium/ Netherlands	0055	Belgium	0008
			France	0005
			Netherlands	0009
	Germany	0053	Austria	0014
			Germany	0003
	Italy/Iberia	0066	Italy	0016
			Portugal	0018
			Spain	0015
	New Zealand	0027	—	—
	Pan-Nordic	0057	Denmark	0013
			Finland	0012
			Norway	0007
			Sweden	0026
			Others	0050
	Switzerland	0010	—	—
	U.S.A	0001	—	—
	UK	0004	—	—
MFC-L2720DWR	Russia	0048	—	—

Note:

- This code list is current as of May 2017.
  Please contact Brother distributors for the latest information.

MODEL	Country Code		Country Code (Detail)	
MFC-L2740DW	Australia	0006	—	—
	Brazil	0042	—	—
	Canada	0002	—	—
	CEE-General	0088	Bulgaria	0032
			Croatia	0081
			Czecho	0037
			Hungary	0038
			Poland	0039
			Romania	0033
			Slovakia	0086
			Slovenia	0082
			Others	0050
	Chile	0036	—	—
	France/Belgium/ Netherlands	0055	Belgium	0008
			France	0005
			Netherlands	0009
	Germany	0053	Austria	0014
			Germany	0003
	Indonesia	0029	—	—
	Italy/Iberia	0066	Italy	0016
			Portugal	0018
			Spain	0015
	Malaysia	0040	—	—
	Middle East And North Africa	0076	Gulf	0041
			Turkey	0025
	New Zealand	0027	—	—
	Pan-Nordic	0057	Denmark	0013
			Finland	0012
			Norway	0007
			Sweden	0026
			Others	0050
	Peru	0036	—	—
	South Africa	0024	—	—
	Switzerland	0010	—	—
	Taiwan	0023	—	—
	Thailand	0040	—	—
	U.S.A	0001	—	—
	UAE	0041	—	—
	UK	0004	—	—
MFC-L2740DWR	Russia	0048	—	—

Note:

- This code list is current as of May 2017.
  Please contact Brother distributors for the latest information.

1.3.24 Print maintenance information (function code: 77)

<Function>

This function is used to print the maintenance information, such as remaining amount of consumables, the number of replacements, and counter information.

<Operating Procedure>

For models without keypad

(1) Press the [▲] or [▼] key in the initial state of maintenance mode to display "MAINTENANCE 77" on the LCD, and press the [OK] key. Printing maintenance information starts.

(2) When printing is completed, the machine returns to the initial state of maintenance mode.

For models with keypad

(1) Press the [7] key twice in the initial state of maintenance mode. Printing maintenance information starts.

(2) When printing is completed, the machine returns to the initial state of maintenance mode.

■ Maintenance information

```
MAINTENANCE                                                    Print Date:01/05/15
① MFC-L2740DW series ②Serial No.=000G01234567890 ③Model=8C5-H77 ④Country=0001 ⑤SW CheckSum=D4 /NG
⑥ Main ROM: Ver.A U1404041137      ⑭ROM ChkSum: 1735      ㉑NG00   000000   10FF ㉒OKNG   000000000001
⑦ Sub ROM: Ver.1.00 P1403242351    ⑮RTC Check: OK         ㉓C018000000000010
⑧ Boot ROM: B1403040111            ⑯RTC BackUp: OK        4000000000000000  00000090
⑨ Demo ROM: D--------              ⑰Before BackUp: 01:24  ㉔00003488 00003488 00000000 00000000
⑩ Engine ROM: F1.04                ⑱After BackUp: 03:44   00000000 00000000 00000000 00000000
⑬ Memory Version: a                                       00000000 00000000 00000000 00000000
⑪ Panel Main ROM: T1403250000      ⑲USB Prod.ID: 0320
⑫ Panel Boot ROM: 11402100000      ⑳RAM Size =  64Mbyte
  Remaining life of :
㉕ *Toner Cartridge: 92%    ㉖**Drum Unit: 11950 (100%)
㉗ Toner Warn Threshold: 15%

  <Device Status>                                  ㉝ <Error History (last 10 errors)>
㉘ Total Page Count: 23                               1: 9302:No Paper          01/02/04 06:14 Page: 3
㉙ Copy Count: 0                                      2:
㉚ PC-Print Count: 9                                  3:
㉛ List/FAX Count: 14                                 4:
                                                     5:
㉜ ***Average Coverage(Total): 9.87%                  6:
㉝ ***Average Coverage(Current)*: 9.87%               7:
㉞ ***Average Coverage(Previous): 0.00%               8:
                                                     9:
  <Drum Information>                                10:
㉟ Drum Page Count: 50
㊱ Drum Count: 709                                  ㊹ <Replace Count>
                                                     Drum Unit: 0
㊲ <Developing Roller Count(Current/Previous)>        Toner Cartridge: 0 (0)#     00/00/00
    547/0
                                                    ㊺ <Scan Count>
㊳ <Total Pages Printed>                              SX Page Count: 0        2-sided Page Count: 2
   Manual Feed: 0         2-sided: 1                 FB Page Count: 1
   Tray 1: 22                                        ADF Jam SX: 0           ADF Jam 2-sided: 0
   A4/Letter: 23          Envelope: 0
   Legal/Folio: 0         A5: 0                     ㊻ <COM Error>
   B5/Executive: 0        Others: 0                  1: 00000000  01/01/04 00:00
   Plain/Thin/Recycled: 23                           2: 00000000  01/01/04 00:00
   Thick/Thicker/Bond: 0                             3: 00000000  01/01/04 00:00
   Envelope/Env.Thick/Env.Thin: 0
   Label: 0               Hagaki: 0                 ㊼ <Developing Bias: 340V>

㊴ Current Toner: 23                                 ㊽ <Engine Sensor Log>
㊵ Previous Used Toner: 0                              KO: 000000/000000      MN: 000000/000000
㊶ Developing Roller Count(Current/Previous)           RS: 000000/000000      EJ: 000000/000000
    503/0
                                                    ㊾ <Status Log>
㊷ <Total Paper Jams: 0>                              801101  801101  801101  801101  801300
   Jam Tray: 0            Jam Rear: 0                801101  801101  801300  801300  801101
   Jam Inside: 0          Jam 2-sided: 0
                                                    ㊿ <HP ME/HP ME Log>
                                                      0/00:00:00:00:00:00:00:00:00:00:00:00:00:00:00:00

                                                    ⑤① <Power On Time: 6 hours>
                                                    ⑤② <Power On Count: 14>
                                                    ⑤③ <First Date PC-Prn: --/--/--  /  RTC: --/--/-->

                                                     1:0,0,0,0,0,0,0,0,0,0,0,0
                                                     2:0,0,0,0,0,0,0,0,0,0,0,0
                                                     3:0,0,0,0,0,0,0,0,0,0,0,0

*   Remaining life will vary depending on the types of documents printed,
    their coverage and device usage.
**  Based on A4/Letter printing.
*** Calculated coverage.
```

Fig. 5-19

1	Model name	28	Total printed pages
2	Serial number	29	Copied pages
3	Model code	30	Printed PC pages
4	Country code	31	List/Fax pages
5	Switch check sum (factory use)	32	Accumulated average coverage
6	Main firmware version	33	Average coverage by the current toner cartridge
7	Sub firmware version	34	Average coverage by the previous toner cartridge
8	Boot firmware version	35	Drum page count
9	Demo firmware version	36	Rotations of the drum
10	Engine firmware version	37	Total rotations of the developer roller (currently / previously used toner)
11	Panel firmware version *1	38	Total printed pages per paper tray / paper size / paper type
12	Panel boot firmware version *1	39	Printed pages per current toner cartridge
13	Memory version	40	Printed pages per previously used toner cartridge
14	ROM check sum *2	41	Total rotations of the developer roller excluding rotations not related to printing such as warming-up (currently / previously used toner)
15	RTC (Real Time Clock) check *2	42	Total paper jams / Paper jams by section
16	RTC (Real Time Clock) backup *2	43	Machine error log / Total pages printed at the time of the error
17	Time before RTC (Real Time Clock) backup *2	44	Replacement count by consumables and periodic replacement parts
18	Time after RTC (Real Time Clock) backup *2	45	Scanned pages
19	USB ID code	46	Communication error log *2
20	RAM size	47	Developing bias voltage value
21	Function code: 55 result / Wireless LAN setting by spec / Wireless LAN output peak / WLAN Setup YES/NO setting / Current toner cartridge type / Previous toner cartridge type	48	Engine sensor log (Not necessary for maintenance)
22	Main PCB inspection log / High voltage inspection log / The number of times that the discharge error / Fuser unit error / Polygon motor lock error / Irregular power supply detection error occurred / Process status / Next power on state	49	Status log (Not necessary for maintenance)
23	Process status / Process checksum	50	Home position detection error / Home position detection error log (Not necessary for maintenance)
24	Not necessary for maintenance (ADF sensor log)	51	Total power distribution time
25	Estimated remaining toner amount	52	The number of times that the power is turned ON
26	Remaining life of drum unit	53	Start date for machine operation / First RTC setting date
27	Threshold setting rate when toner is running out		

*1 Models with touch panel only

*2 Models with modem only

1.3.25 Check fan operation (function code: 78)

<Function>

This function is used to check that the fan is operating normally. Switch the setting among rotation speed 100%, 50%, and OFF.

LCD	Name	Description
F	Fan	Emits the heat in the fuser unit.

<Operating Procedure>

For models without keypad

(1) Press the [▲] or [▼] key in the initial state of maintenance mode to display "MAINTENANCE 78" on the LCD, and press the [OK] key. "F100" is displayed on the LCD and the fan rotates at 100% speed.

(2) By pressing the [Start] key, "F50" is displayed on the LCD and the fan rotates at 50% speed.

(3) By pressing the [Start] key, "F0" is displayed on the LCD and the fan stops.

(4) When the [Stop] key is pressed, the machine stops this operation and returns to the initial state of maintenance mode.

For models with keypad

(1) Press the [7], and then the [8] key in the initial state of maintenance mode. "F100" is displayed on the LCD and the fan rotates at 100% speed.

(2) By pressing the [Start] or [Mono Start] key, "F50" is displayed on the LCD and the fan rotates at 50% speed.

(3) By pressing the [Start] or [Mono Start] key, "F0" is displayed on the LCD and the fan stops.

(4) When the [X] or [Stop] key is pressed, the machine stops this operation and returns to the initial state of maintenance mode.

■ Fan location

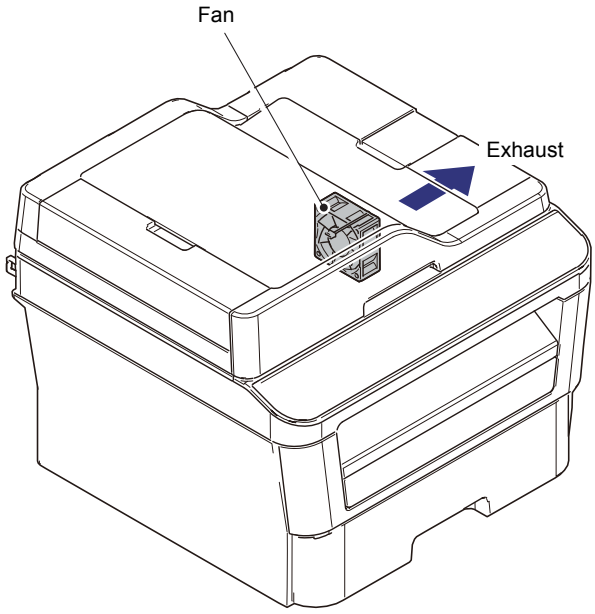

Fig. 5-20

1.3.26 Display machine log information (function code: 80)

<Function>

This function is used to display the log information on the LCD.

<Operating Procedure>

For models without keypad

(1) Press the [▲] or [▼] key in the initial state of maintenance mode to display "MAINTENANCE 80" on the LCD, and press the [OK] key. "MACERR_01:****" is displayed on the LCD (**** indicates error code).

(2) Pressing the [Start] key displays the next item.

(3) When the [Stop] key is pressed, the machine returns to the initial state of maintenance mode.

For models with keypad

(1) Press the [8], and then the [0] key in the initial state of maintenance mode. "MACERR_01:****" is displayed on the LCD (**** indicates error code).

(2) Pressing the [Start] or [Mono Start] key displays the next item. Pressing the [◀] key returns to the previous item.

(3) When the [X] or [Stop] key is pressed, the machine returns to the initial state of maintenance mode.

Maintenance information

LCD	Description
MACERR_##:0000	Machine error log (last ten errors) *1
USB:000G8J000166	Serial number *2
MAC:008077112233	MAC address
PCB:911309123456	Main PCB serial number
KTN_ERM:87%	Estimated remaining toner amount based on the average coverage
KTN_RRM:67%	Estimated remaining toner amount based on the rotations of developer roller
DRUM_PG:00000000	Printed pages for drum unit
TTL_PG:00000000	Total printed pages
TTLCOPY:00000000	Total pages copied
TTLPCPT:00000000	Total PC printed pages
TTLFAX:00000000	Total List/Fax pages printed *3
KCVRGUSI:4.32%	Average coverage by the current toner cartridge
KCVRGACC:3.47%	Accumulated average coverage
DRUM:00000000	Rotations of the drum
KTN_RND: 00000000	Rotations of the toner developer roller
MN_PG:00000000	Paper input for manual feed slot
TR1_PG:00000000	Paper input for paper tray
DX_PG:00000000	Paper input for duplex tray
A4+LTR:00000000	Total paper input for A4 and Letter
LG+FOL:00000000	Total paper input for Legal and Folio
B5+EXE:00000000	Total paper input for B5 and Executive

LCD	Description
ENVLOP:00000000	Paper input for Envelope
A5 :00000000	Paper input for A5 (including A5 Landscape)
OTHER :00000000	Paper input for other sizes
PLTNRE:00000000	Printed pages of plain, thin, and recycled paper
TKTRBD:00000000	Printed pages of thick, thicker, and bond paper
ENVTYP:00000000	Printed pages of envelope, thick envelope, and thin envelope
LABEL:00000000	Printed labels
HAGAKI:00000000	Printed postcards
TTL_JAM:00000000	Total paper jams
TR1_JAM:00000000	Paper jams that have occurred in paper tray
IN_JAM:00000000	Paper jams that have occurred in the center of the machine
RE_JAM:00000000	Paper jams that have occurred around the back cover
DX_JAM:00000000	Paper jams that have occurred in the duplex tray
POWER:00000375	Total power distribution time (hour)
PWRCNT:00000001	The number of times that the power is turned ON
KTN_CH:0000	The number of times that the toner cartridge has been replaced *4
DRUM_CH:0000	The number of times that the drum unit has been replaced *4
KTN_PG1:00000000	Pages printed with the current toner cartridge
KTN_PG2:00000000	Pages printed with the previous toner cartridge
ADF_PG:000000000	ADF scanned pages (single-side scanning models only)
ADSX_PG:00000000	ADF single-side scanned pages (duplex scanning models only)
ADDX_PG:00000000	ADF duplex scanned pages (duplex scanning models only)
FB_PG:000000	FB scanned pages
ADF_JAM:0000000	Document jams that have occurred on ADF scanning (single-side scanning models only)
ADSX_JAM:000000	Document jams that have occurred on ADF single-side scanning (duplex scanning models only)
ADDX_JAM:000000	Document jams that have occurred on ADF duplex scanning (duplex scanning models only)
COMERR#:00000000	Communication error log (past three errors) *5 (models with fax only)
KDEV_BIAS:400V	Developing bias voltage value
ENGERR##:000000	Engine error log (past ten errors) *6
HODN_ER:0000	The number of discharge errors occurred
FUSR_ER:0000	The number of fuser unit errors occurred
MTLK_ER:0000	The number of polygon motor lock errors occurred in the laser scanner
DEVSTATUS__##:00	Log for design analysis *7

*1 01 to 10 will be displayed for "##" in chronological order. Pressing the [SET] or [OK] key while the machine error log is displayed shows "PGCNT:00000000" (total pages printed at the time of the error) on the LCD.

*2 The serial number can be changed according to the procedures below.

For models without keypad

1) Press the [▲] or [▼] key while the serial number is displayed to display "9" on the LCD, and press the [OK] key. LCD displays the serial number again.
2) Enter the [4], [7] and [5] in this order as described in the procedure (1). Serial number is displayed on the LCD. The first digit starts flashing to indicate that it is editable.
3) Press the [▲] or [▼] key to display the first digit of the serial number on the LCD, and press the [OK] key. The second digit starts to flash. Enter the second digit to the 15th digit similarly.
4) Press the [OK] key, and the serial number is saved. The machine returns to the initial state of maintenance mode.

For models with keypad

1) While the serial number is displayed, press the [9], [4], [7], and [5] keys in this order. The first digit of the serial number starts flashing to indicate that it is editable.
2) Use the keypad to enter the first digit of the serial number. The second digit starts to flash. Enter the second digit to the 15th digit similarly.
<Entry method of alphanumeric characters>
See the table below and press the corresponding key until the desired character is displayed.

Keypad	Assigned characters
2	2→A→B→C
3	3→D→E→F
4	4→G→H→I
5	5→J→K→L
6	6→M→N→O
7	7→P→Q→R→S
8	8→T→U→V
9	9→W→X→Y→Z

3) Press the [SET] or [OK] key, and the serial number is saved. The machine returns to the initial state of maintenance mode.

*3 For models without fax, the LCD displays "TTLLIST:00000000" (List pages printed).

*4 Pressing the [SET] or [OK] key while the replacement count by consumables is displayed shows "DATE_XX:000000" (XX: name of consumables) and the date of replacement on the LCD. (Models without RTC does not display the replacement date.)

*5 Pressing the [SET] or [OK] key while the communication error is displayed shows "DATE:0000000000" and the date of replacement on the LCD. (Models without RTC does not display the replacement date.)

*6 01 to 10 will be displayed for "##" in chronological order. Pressing the [SET] or [OK] key while the machine error log is displayed shows "TM:00000 BT:000" (TM: minutes passed from the previous error, BT: number of times that the power is turned ON/OFF) on the LCD.

*7 01 to 10 will be displayed for "##" in chronological order. Pressing the [SET] or [OK] key while the log for design analysis is displayed shows "PGCNT:00000000" (total pages printed at the time of the error) on the LCD.

1.3.27 Display machine error code (function code: 82)

<Function>

This function is used to display the latest error code on the LCD.

<Operating Procedure>

For models without keypad

(1) Press the [▲] or [▼] key in the initial state of maintenance mode to display "MAINTENANCE 82" on the LCD, and press the [OK] key. "MACHINE ERR XXXX" is displayed on the LCD.

(2) When the [Stop] key is pressed, the machine returns to the initial state of maintenance mode.

For models with keypad

(1) Press the [8], and then the [2] key in the initial state of maintenance mode. "MACHINE ERR XXXX" is displayed on the LCD.

(2) When the [X] or [Stop] key is pressed, the machine returns to the initial state of maintenance mode.

1.3.28 Send communication log information to telephone line (function code: 87)

<Function>

This function is used to send the error list to service personnel at a remote service station when a fax communication problem has occurred in the user's machine. Receiving the error list allows the service personnel to analyze the problem current in the user's machine.

<Operating Procedure>

For models without touch panel

- Service side

(1) Make a call from the service side equipment to the user side equipment.

- User side

(2) Press the [Menu], [Start], and [Menu] key in this order while the machine is in the ready state. "0" is displayed on the LCD.

(3) Press the [8], and [7] key in this order. "SENDING P.01" is displayed on the LCD, and sending error list starts. When the error list is sent, the machine returns to the ready state.

- Service side

(4) Once the user side equipment started sending the error list, press the [Start] key. "1.Send 2.Receive" is displayed on the LCD.

(5) Press the [2] key. Receiving the error list starts.

For models with touch panel

- Service side

(1) Make a call from the service side equipment to the user side equipment.

- User side

(2) Press and hold the [Home] key while the machine is in the ready state until the LCD display changes.

(3) Press and hold the blank field at the bottom of the LCD until the LCD display changes.

(4) Press the [*], [0], [#], [8], and [7] key in this order. "SENDING P.01" is displayed on the LCD and sending error list starts. When the error list is sent, the machine returns to the ready state.

- Service side

(5) Once the user side equipment started sending the error list, press the [FAX Start] key. "Send or Receive? / 1.Send 2.Receive" is displayed on the LCD.

(6) Press the [2] key. Receiving the error list starts.

1.3.29 Reset irregular power supply detection counter of low-voltage power supply PCB (function code: 88)

<Function>

This function is used to reset the corresponding counter after the low-voltage power supply PCB ASSY is replaced. The number of times the part has been replaced is increased by one.

<Operating Procedure>

For models without keypad

(1) Press the [▲] or [▼] key in the initial state of maintenance mode to display "MAINTENANCE 88" on the LCD, and press the [OK] key. "Reset-LVPS" is displayed on the LCD.

(2) Press the [OK] key. "LVPS OK?" is displayed on the LCD.

(3) Pressing the [OK] key resets the number of times that irregular power supply errors occurred and "Reset-LVPS" is displayed on the LCD.

(4) When the [Stop] key is pressed, the machine returns to the initial state of maintenance mode.

For models with keypad

(1) Press the [8] key twice in the initial state of maintenance mode. "Reset-LVPS" is displayed on the LCD.

(2) Press the [Start] or [Mono Start] key. "LVPS OK?" is displayed on the LCD.

(3) Pressing the [Start] or [Mono Start] key resets the number of times that irregular power supply errors occurred and "Reset-LVPS" is displayed on the LCD.

(4) When the [X] or [Stop] key is pressed, the machine returns to the initial state of maintenance mode.

1.3.30 Quit maintenance mode (function code: 99)

<Function>

This function is used to quit the maintenance mode, restart the machine, and return it to the ready state. Also forcefully close the fuser unit error.

<Operating Procedure>

For models without keypad

(1) Press the [▲] or [▼] key in the initial state of maintenance mode to display "MAINTENANCE 99" on the LCD, and press the [OK] key. The machine quits maintenance mode and returns to the ready state.

For models with keypad

(1) Press the [9] key twice in the initial state of maintenance mode. The machine quits maintenance mode and returns to the ready state.

2. OTHER SERVICE FUNCTIONS

2.1 Print Communication Error List

<Function>

This function is used to print the communication error list (Communication List).

<Operating Procedure>

(1) Press the [Menu] key while the machine is in the ready state and press the [#], [1], [0], [4], [1], and [4] key in this order immediately. Communication error list (Communication List) is printed. When printing is completed, the machine returns to the ready state.

Confidential

CHAPTER 6 WIRING DIAGRAM

1. WIRING DIAGRAM

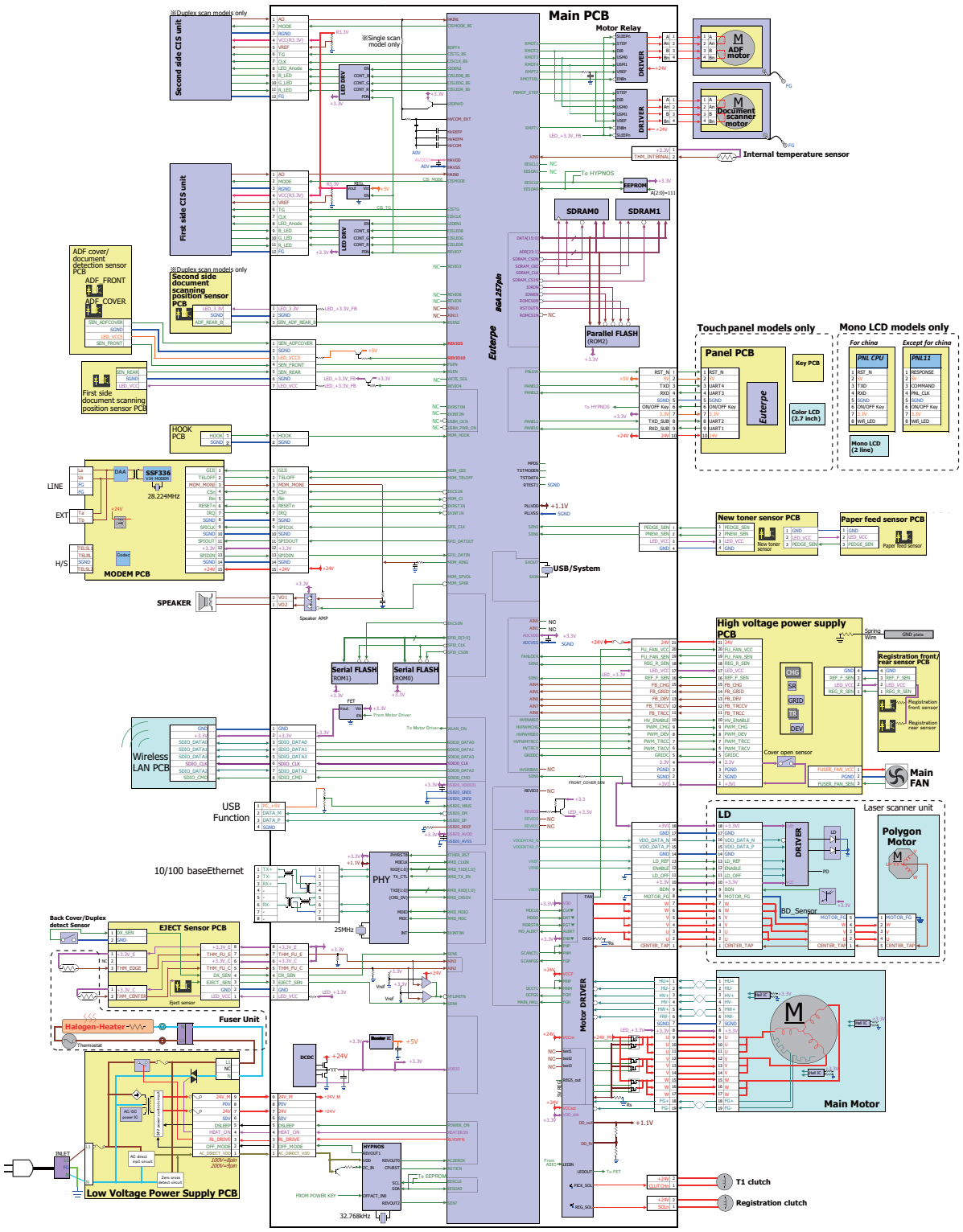

Confidential

CHAPTER 7 PERIODICAL MAINTENANCE

1. PERIODICAL REPLACEMENT PARTS

There are no parts to be replaced periodically.

Confidential

APPENDIX 1 SERIAL NUMBERING SYSTEM

■ Serial number labels for the machine itself

<How to Read>

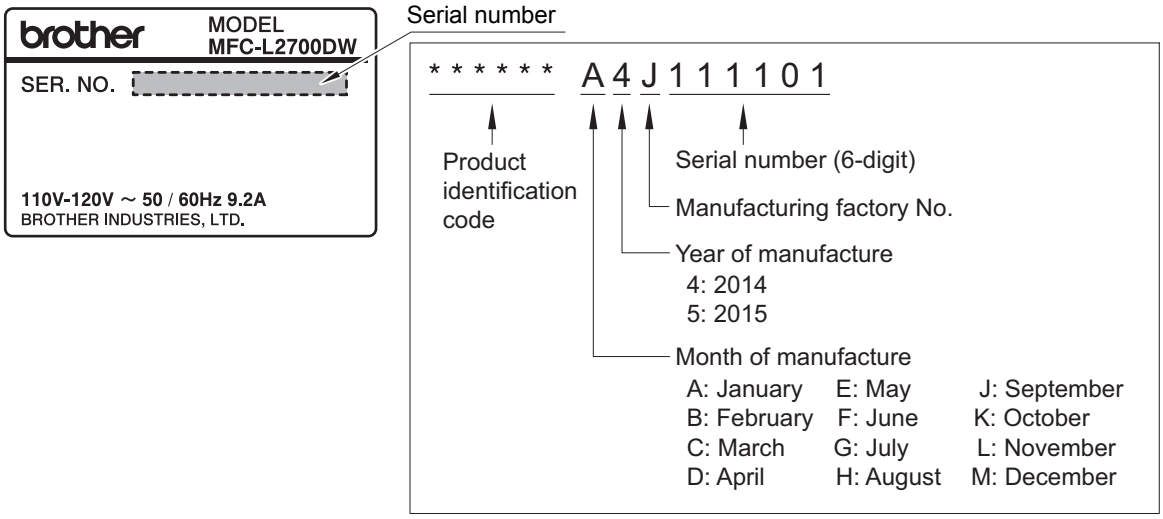

Fig. App. 1-1

<Location>

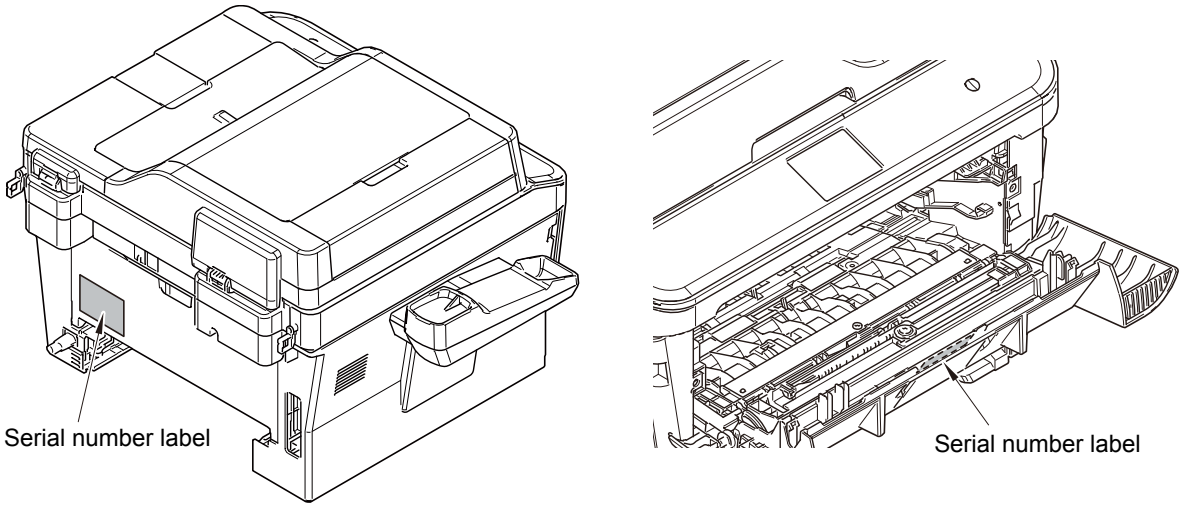

Fig. App. 1-2

Confidential

APPENDIX 2 DELETING USER SETTING INFORMATION

The user setting information for the machine is stored in the main PCB. You can return this to the default settings by following the procedure below.

<Operating Procedure>

For models without touch panel

(1) Press the [Menu] key while the machine is in the ready state.

(2) Press the [▲] or [▼] key to display "General Setup" on the LCD, and press the [OK] key.

(3) Press the [▲] or [▼] key to display "Reset" on the LCD, and press the [OK] key.

(4) Press the [▲] or [▼] key to display "All Settings" on the LCD, and press the [OK] key.

(5) "Reboot OK?" appears on the LCD. Press the [OK] key to delete the user setting information and return the machine to the ready state.

For models with touch panel

(1) Press the [Settings] key while the machine is in the ready state.

(2) Press the [All Settings] key on the LCD.

(3) Press the [Initial Setup] key on the LCD.

(4) Press the [Reset] key on the LCD.

(5) Press the [All Settings] key on the LCD.

(6) "Reset All Settings? Yes No" appears on the LCD. Press the [Yes] key.

(7) "Reboot OK? Press [Yes] for 2 seconds to confirm." appears on the LCD. Press and hold the [Yes] key for 2 seconds or longer to delete the user setting information and return the machine to the ready state.

Confidential

APPENDIX 3 INSTALLING THE MAINTENANCE PRINTER DRIVER

To identify machines connected via USB direct interface, the computer requires the corresponding driver for the virtual USB device. If you connect any number of machines to your computer, the same number of virtual USB devices will be automatically configured on your computer. To prevent many virtual USB devices from being configured, use the unique driver installation procedure described below that enables your computer to identify terminals via one single virtual USB device.

Note:

- Once this installation procedure is carried out for a computer, no more driver/software installation will be required for that computer to identify machines. If the Brother Maintenance USB Printer driver has been already installed to your computer according to this procedure, skip this section.
- Before proceeding to the procedure given below, make sure that the Brother Maintenance USB Printer driver is stored in your computer.

■ Windows XP

(1) Check that the power switch of the machine is turned OFF. Disconnect the USB cable that connects the machine with your computer.

(2) Turn ON your computer.

(3) Turn ON the power switch of the machine.

(4) Enter the maintenance mode.
(Refer to "1.1 How to Enter Maintenance Mode" in Chapter 5.)

(5) Connect the machine to your computer using a USB cable.
The following window appears.

(6) The following screen appears, indicating the detection of new hardware device by the system. Select "No, not this time." And click [Next].

Confidential

(7) Select “Install the software automatically (Recommended)” and click [Next].

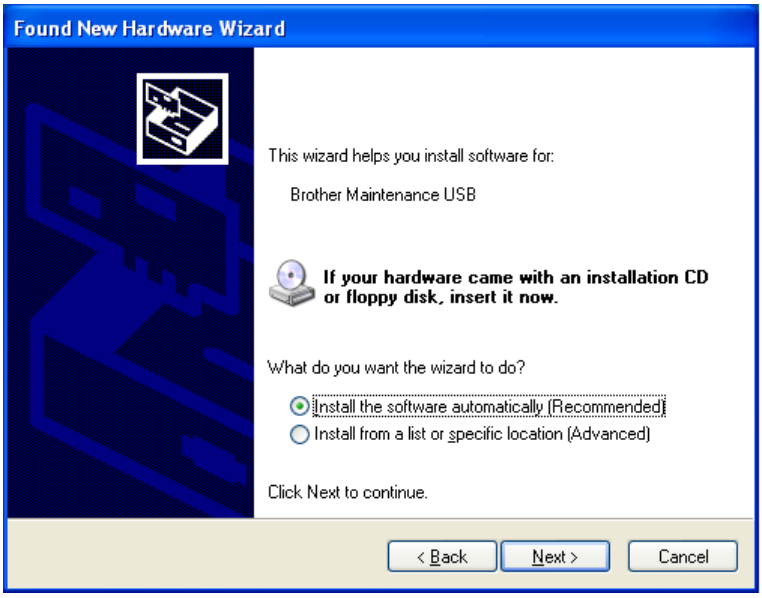

(8) Alert warning message of WHQL appears. Click [Continue Anyway] to proceed.

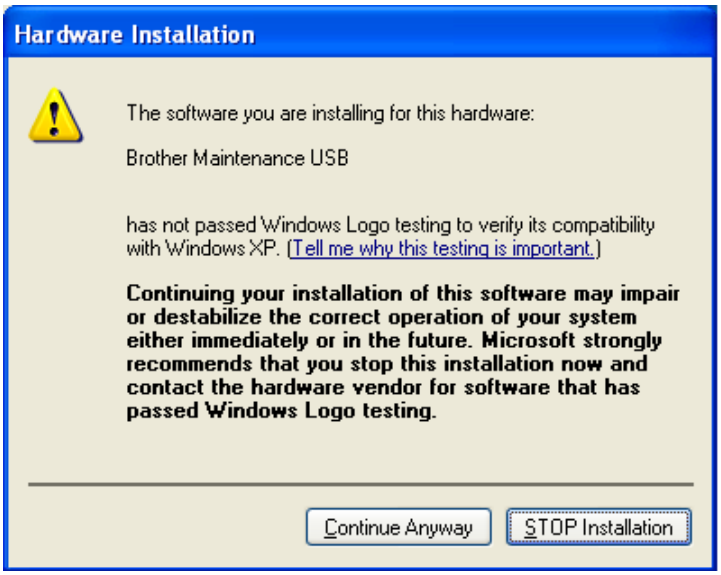

Confidential

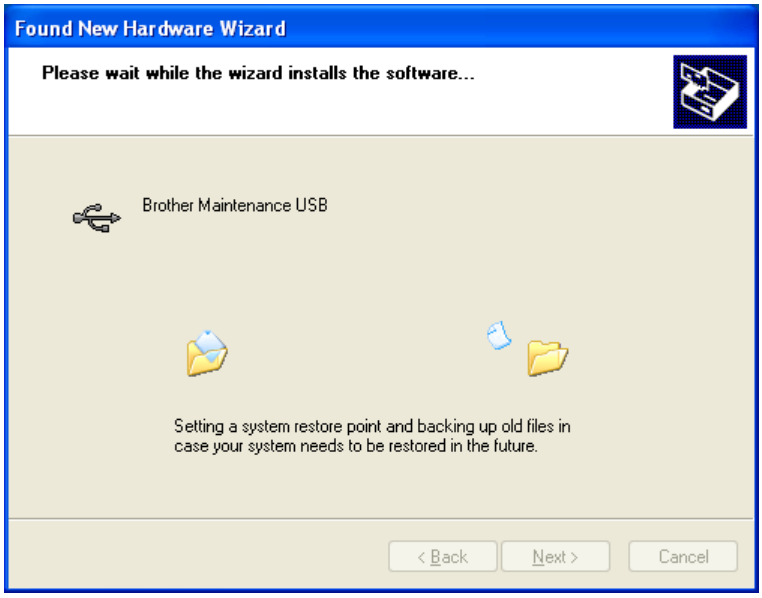

(9) Repeat steps (6) to (8) three times. Installation is completed.

(10) If the Brother Maintenance USB Printer driver is successfully installed, the following message screen appears. Click [Finish] to return.

Confidential

Note:

In order to check whether the printer driver is successfully installed, click [Start], [Settings], [Printers] to select the Printers window. Then, check that the Brother Maintenance USB Printer icon is shown.

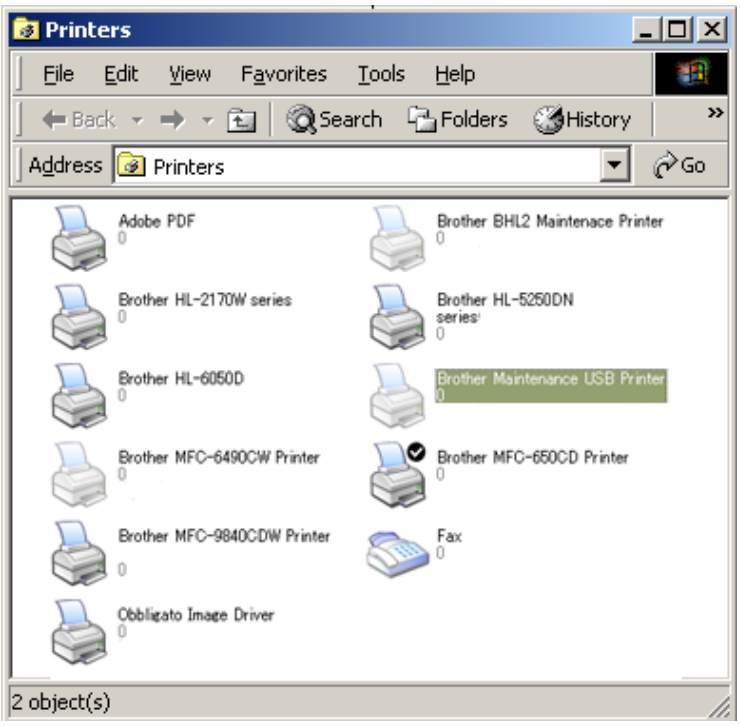

Confidential

■ Windows Vista/Windows 7/Windows 8/Windows 8.1

(1) Check that the power cord of the machine is unplugged from the electrical outlet. Disconnect the USB cable that connects the machine with your computer.

(2) Turn ON your computer.

(3) Double-click Setup.exe inside the Brother Maintenance USB Printer folder that was saved in a temporary folder. The following screen appears. Click the [Next] button.

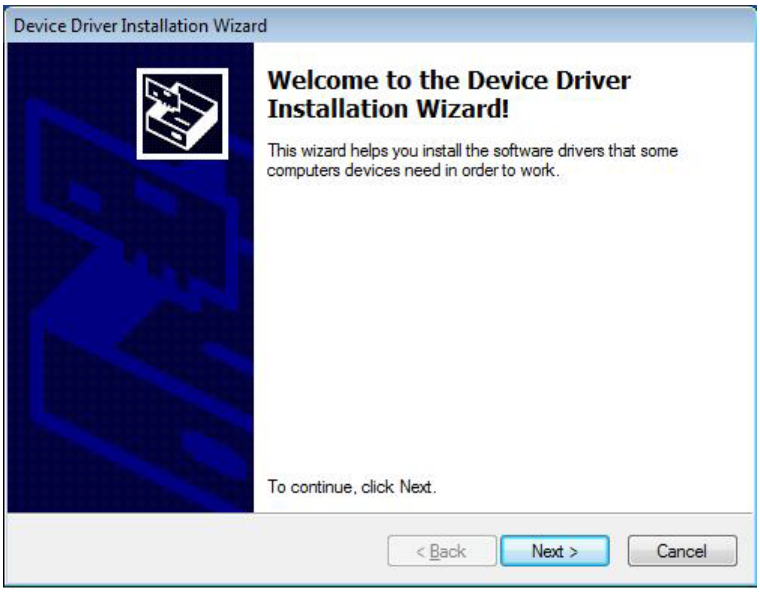

The following screen is displayed during installation.

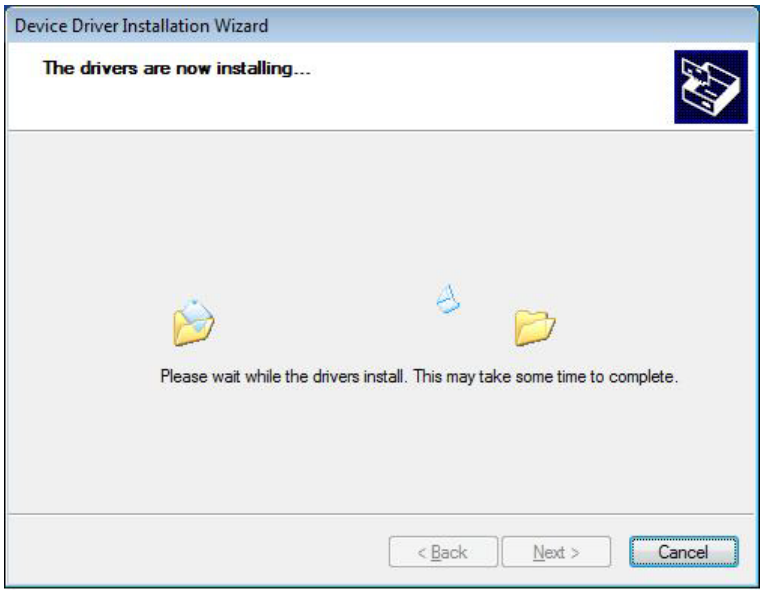

Confidential

(4) Wait for the following screen to appear and click [Finish].

(5) Plug the power cord of the machine into an electrical outlet.

(6) Enter the maintenance mode.
(Refer to "1.1 How to Enter Maintenance Mode" in Chapter 5.)

(7) Connect the machine to your computer using a USB cable and the installation will be performed automatically.

Confidential