Service Manual

C910 Color Printer

5055-01X

- Table of Contents
- Start Diagnostics
- Safety and Notices
- Trademarks
- Index
- Manuals Menu

LEXMARK™

5055-01x

Edition: November 2001

This publication could include technical inaccuracies or typographical errors. Changes are periodically made to the information herein; these changes will be incorporated in later editions. Improvements or changes in the products or the programs described may be made at any time.

Comments may be addressed to Lexmark International, Inc., Department D22A/032-2, 740 West New Circle Road, Lexington, Kentucky 40550, U.S.A or electronically mailed (e-mail) to ServiceInfoAndTraining@Lexmark.com. Lexmark may use or distribute any of the information you supply in any way it believes appropriate without incurring any obligation to you. You can purchase additional copies of publications related to this product by calling 1-800-553-9727. In other countries, contact your point of purchase.

U.S.A. P/N 12G9081

Contents

Safety Information ix

Safety Notice ix

General Information 1-1

Maintenance Approach 1-1
Standard Inspection and Cleaning Procedure 1-1
Return Parts 1-2
Recommendations For Service 1-2
Tools 1-2
Serial Number 1-3
Abbreviations 1-4
Processes and Configuration 1-5
Electrophotography Process 1-5
Development Unit 1-6
Transfer Unit 1-6
Cleaning Unit 1-7
Paper Feeding / Fusing 1-7
Drive System 1-8
Paper Feeding 1-9
Cassette Paper Feeder 1-9
Multi-Purpose Feeding 1-10
Registration Unit 1-11
Separation Unit 1-12
Fuser Unit 1-13
Delivery 1-14
Belt Unit 1-15
Belt Up/Down 1-16
Expansion Paper Feeder 1-16
Duplex Unit 1-17
Printing Mode 1-18
OHP Mode 1-18
Thick Paper Mode 1-18
Envelope / Postcard Mode 1-19
Operation Mode 1-19
Clearing Paper Jams 1-20
High Capacity Paper Feeder (HCPF) 1-25
Maintenance Mode 1-33
High Capacity Paper Feed Sensor / Switch Test 1-35

Diagnostic Information 2-1

Adjustments and Procedures Following Parts Replacement 2-1
Start 2-3
Initial Check 2-3
Printer Messages 2-4
Service Error Message Table 2-4
Attendance Messages g 2-25
Maintenance Analysis Procedures (MAPS) 2-43
Symptom Table 2-52
Service Checks 2-55
Drive 1 DC Motor Service Check 2-55
Drive 2 Stepper Motor Service Check 2-55
Duplex Service Check 2-56
Expansion Paper Feed Service Check 2-56
Face-Down Stacker Full Service Check 2-57
High Capacity Paper Feed (HCPF) Service Check 2-57
Operator Panel Service Check 2-58
Paper Carrying Service Check 2-58
Paper Exit, FU/FD Service Check 2-63
Paper Tray Missing Service Check 2-63
Photodeveloper Missing Service Check 2-64
Power Supply Service Check 2-65
Marks on Paper Service Check 2-66
Transfer Belt Up/Down Service Check 2-68
Image Quality Troubleshooting 2-69
Print Quality Problems 2-69
Options Service Check 2-77

Diagnostic Aids 3-1

Power-On Self Test Sequence 3-1
Using the Operator Panel 3-2
Operator Panel Buttons 3-3
Printing the Menu Settings 3-4
Operator Menu Disabled 3-4
Menu Overview 3-4
Diagnostic Mode 3-6
Print Tests 3-8
Hardware Tests 3-10
Device Tests 3-17
Diagnostics - Printer Setup 3-20
Defaults 3-20
Viewing and Resetting the Drum Counters 3-22
Diagnostics - Error Log 3-25

Repair Information 4-1
Service Precautions 4-1
Handling Printed Circuit Boards 4-2
Adjustments 4-3
High Capacity Paper Feed Timing Belt Adjustment 4-3
Removals 4-4
Cover, Top Removal 4-4
Operator Panel Removal 4-4
Cover, Front Removal 4-5
Cover, Front Left 4-6
Cover, Rear Removal 4-6
Cover, Solenoid Removal 4-7
Cover, Left Side Removal 4-7
Cover, Right Side Removal 4-8
Cover, RIP Board Removal 4-9
Tray, Paper Exit Removal 4-10
RIP Box Removal 4-11
Electronic Box Removal 4-11
LED Printhead Removal 4-12
Eraser Removal 4-14
Printhead Controller Board Removal 4-15
Upper Fan Removal 4-16
Multi-Purpose Feeder Tray Removal 4-17
Paper Feed Roller Removal 4-18
Paper Carrying Roller Removal 4-18
Paper Present Sensor Removal 4-19
Paper Feed Frame Removal 4-20
Cassette Guide Removal 4-21
Temperature/Humidity Sensor Removal 4-22
Paper Feed Solenoid Removal 4-22
Paper Remaining Sensor Removal 4-22
Gear Cover Removal 4-23
Multi-Purpose Feeder Roll Removal 4-23
Multi-Purpose Feeder Clutch Removal 4-23
OHP Detection Sensor (Upper) Removal 4-23
Fanning Pad Removal 4-25
Registration Sensor Removal 4-26
Multi-Purpose Feeder Paper Present Sensor Removal 4-27
Paper Carrying Frame Removal 4-28
Paper Carrying Roller (Upper) Removal 4-28
Paper Carrying Clutch Removal 4-28
OHP Detection Sensor (Lower) Removal 4-28

Registration Frame, Registration Clutch Removal 4-29
Transfer Belt Removal. 4-30
Belt Up/Down Detection Sensor Removal. 4-34
Sensor Board Removal 4-35
Density Sensor Removal. 4-36
Separation Fingers Removal. 4-36
Sensor Cleaner Removal 4-36
Printer Controller Removal 4-37
High Voltage Power Supply Board (HVU) Removal 4-38
R Sub Frame Removal 4-39
Toner Remaining Sensor Removal 4-39
Drum Gear Sensor Removal. 4-39
Sub Frame F1, Sub Frame F2 Removal 4-40
Drive Gear Unit Sensor Assembly Removal 4-41
Belt Up/Down Clutch Removal 4-42
Power Supply 1 Removal 4-43
Power Supply 2 Removal 4-44
Drive Motor Assembly Removal 4-45
Motor Drive Board Removal 4-45
Power Switch Removal 4-46
Connector, Duplex Unit Removal 4-47
Paper Size Sensor Board Assembly Removal 4-48
Main Unit Fan Removal. 4-49
Main Drive Unit Removal. 4-50
Face-Up Paper Exit Assembly Removal 4-54
Face-Up/Down (Flapper Detection) Sensor Removal. 4-54
Face-Up/Down Solenoid Removal 4-54
Paper Delivery Sensor Removal 4-54
Paper Exit Tray Switch Removal. 4-54
Face-Down Guide Assembly Removal 4-55
Paper Exit Motor & Full Sensor Removal 4-55
Turn Guide Cover Sensor Removal 4-57
Right Slide Rail Removal. 4-58
Front Cover Open Switch Actuator Removal 4-58
Lock Handle Assembly Removal. 4-59
Top Unit Removal 4-60
Stay Arm Removal 4-61
Fuser Removal 4-62
Options Removals 4-63
Expansion Paper Feeder Removal 4-63
Duplex Unit Separation Removal 4-71
Duplex Unit Removal. 4-72
Duplex Timing Belt Removal 4-72

Duplex Pressure Roller and Solenoid Removal 4-73
Duplex Feed Roller And Solenoid Removal. 4-73
Duplex Side Fence Motor Assembly / Side Fence Removal . . . 4-74
Duplex Paper Carrying Motor Removal 4-75
HCPF Covers Removal 4-76
HCPF Call Roller, Paper Feed Roller, Reverse Roller Removal 4-77
HCPF Pickup Solenoid Removal 4-78
HCPF Paper End Sensor Removal 4-79
HCPF Paper Size Sensors (1, 2) Removal 4-79
HCPF Tray Motor Removal 4-81
HCPF Paper Level Sensor Removal 4-82
HCPF Power Supply Removal. 4-83

Locations 5-1

Covers Diagram 5-1
Major Parts Diagram 5-2
Printer Controller Board 5-4
Printhead Controller Board. 5-5
RIP Board. 5-6
Power Source Unit 1 Board 5-7
Power Source Unit 2 Board 5-7
High Voltage Power Supply Board. 5-8
Sensor Board 5-9
Expansion Paper Feeder Controller Board 5-9
Duplex Unit Controller Board 5-10
Motor Drive Board 5-10
Size Sensor Board 5-10
High Capacity Paper Feed (HCPF) 5-11
High Capacity Paper Feed Configuration. 5-12
Electrical Parts Layout 5-13
Driving Parts Layout. 5-14
Sensor and Switch Locations. 5-15
Component Locations 5-16

Preventive Maintenance 6-1

Maintenance Kit 6-1
Periodic Maintenance 6-2
Lubricants and Cleaners 6-2

Parts Catalog 7-1

How to Use This Parts Catalog 7-1
Assembly 1: Covers 1 7-2
Assembly 2: Covers 2 7-4
Assembly 3: Covers 3 7-6
Assembly 4: Covers 4 7-8
Assembly 5: Covers 5 7-10
Assembly 6: Upper Unit. 7-12
Assembly 7: Base 1. 7-16
Assembly 8: Base 2. 7-20
Assembly 9: Base 3. 7-22
Assembly 10: Electrical 7-24
Assembly 11: I/F Controller 7-28
Assembly 11: I/F Controller (Continued) 7-30
Assembly 12: Fuser Unit 7-32
Assembly 13: Cassette 7-34
Assembly 14: Expansion Feeder 1 7-36
Assembly 15: Expansion Feeder 2 7-38
Assembly 16: Duplex Unit 1 7-40
Assembly 17: Duplex Unit 2 7-42
Assembly 18: High Capacity Paper Feed 1. 7-44
Assembly 19: High Capacity Paper Feed 2. 7-46
Assembly 20: High Capacity Paper Feed 3. 7-48
Assembly 21: High Capacity Paper Feed 4. 7-50
Assembly 22: High Capacity Paper Feed 5. 7-52
Assembly 23: High Capacity Paper Feed 6. 7-54

Index x-1

Safety Information

Safety Notice

- This product is designed, tested and approved to meet strict global safety standards with the use of specific Lexmark components. The safety features of some parts may not always be obvious. Lexmark is not responsible for the use of other replacement parts.
- The maintenance information for this product has been prepared for use by a professional service person and is not intended to be used by others.
- There may be an increased risk of electric shock and personal injury during disassembly and servicing of this product. Professional service personnel should understand this and take necessary precautions.

Consignes de Sécurité

- Ce produit a été conçu, testé et approuvé pour respecter les normes strictes de sécurité globale lors de l'utilisation de composants Lexmark spécifiques. Les caractéristiques de sécurité de certains éléments ne sont pas toujours évidentes. Lexmark ne peut être tenu responsable de l'utilisation d'autres pièces de rechange.
- Les consignes d'entretien et de réparation de ce produit s'adressent uniquement à un personnel de maintenance qualifié.
- Le démontage et l'entretien de ce produit pouvant présenter certains risques électriques, le personnel d'entretien qualifié devra prendre toutes les précautions nécessaires.

Norme di sicurezza

- Il prodotto è stato progettato, testato e approvato in conformità a severi standard di sicurezza e per l'utilizzo con componenti Lexmark specifici. Le caratteristiche di sicurezza di alcune parti non sempre sono di immediata comprensione. Lexmark non è responsabile per l'utilizzo di parti di ricambio di altri produttori.
- Le informazioni riguardanti la manutenzione di questo prodotto sono indirizzate soltanto al personale di assistenza autorizzato.
- Durante lo smontaggio e la manutenzione di questo prodotto, il rischio di subire scosse elettriche e danni alla persona è più elevato. Il personale di assistenza autorizzato, deve, quindi, adottare le precauzioni necessarie.

Sicherheitshinweise

- Dieses Produkt und die zugehörigen Komponenten wurden entworfen und getestet, um beim Einsatz die weltweit gültigen Sicherheitsanforderungen zu erfüllen. Die sicherheitsrelevanten Funktionen der Bauteile und Optionen sind nicht immer offensichtlich. Sofern Teile eingesetzt werden, die nicht von Lexmark sind, wird von Lexmark keinerlei Verantwortung oder Haftung für dieses Produkt übernommen.
- Die Wartungsinformationen für dieses Produkt sind ausschließlich für die Verwendung durch einen Wartungsfachmann bestimmt.
- Während des Auseinandernehmens und der Wartung des Geräts besteht ein zusätzliches Risiko eines elektrischen Schlags und körperlicher Verletzung. Das zuständige Fachpersonal sollte entsprechende Vorsichtsmaßnahmen treffen.

Pautas de Seguridad

- Este producto se ha diseñado, verificado y aprobado para cumplir los más estrictos estándares de seguridad global usando los componentes específicos de Lexmark. Puede que las características de seguridad de algunas piezas no sean siempre evidentes. Lexmark no se hace responsable del uso de otras piezas de recambio.
- La información sobre el mantenimiento de este producto está dirigida exclusivamente al personal cualificado de mantenimiento.
- Existe mayor riesgo de descarga eléctrica y de daños personales durante el desmontaje y la reparación de la máquina. El personal cualificado debe ser consciente de este peligro y tomar las precauciones necesarias.

Informações de Segurança

- Este produto foi concebido, testado e aprovado para satisfazer os padrões globais de segurança na utilização de componentes específicos da Lexmark. As funções de segurança de alguns dos componentes podem não ser sempre óbvias. A Lexmark não é responsável pela utilização de outros componentes de substituição.
- As informações de segurança relativas a este produto destinam-se a profissionais destes serviços e não devem ser utilizadas por outras pessoas.
- Risco de choques eléctricos e ferimentos graves durante a desmontagem e manutenção deste produto. Os profissionais destes serviços devem estar avisados deste facto e tomar os cuidados necessários.

Informació de Seguretat

- Aquest producte està dissenyat, comprovat i aprovat per tal d'acomplir les estrictes normes de seguretat globals amb la utililització de components específics de Lexmark. Les característiques de seguretat d'algunes peces pot ser que no sempre siguin òbvies. Lexmark no es responsabilitza de l'us d'altres peces de recanvi.
- La informació pel manteniment d’aquest producte està orientada exclusivament a professionals i no està destinada a ningú que no ho sigui.
- El risc de xoc elèctric i de danys personals pot augmentar durant el procés de desmuntatge i de servei d’aquest producte. El personal professional ha d’estar-ne assabentat i prendre les mesures convenients.

安全资讯

- 本产品使用特有的 Lexmark 元件，并依照严格的世界安全标准来设计、测试及验证。有些零件的安全功能可能不明显。对於其他厂牌更换零件的使用， Lexmark 概不负责。
- 本产品的维护资讯仅供专业服务人员使用，而非针对一般使用者。
- 本产品在拆卸、维修的时候，遭受电击或人员受伤的危险性会增高，专业服务人员对这点必须有所了解，并采取必要的预防措施。

안전 사항

- 본 제품은 특정 Lexmark 구성 요소의 사용에 있어 엄격한 세계 안전 표준에 맞도록 설계, 테스트되었으며 승인받았습니다. 일부 부품의 안전성은 항상 보장되지 않습니다. Lexmark는 다른 교체 부품의 사용에 대한 책임을 지지 않습니다.

- 본 제품에 관한 유지 보수 설명서는 전문 서비스 기술자용으로 작성된 것이므로 비 전문가는 사용할 수 없습니다.

- 본 제품을 해체하거나 정비할 경우 전기적인 충격을 받거나 상처를 입을 위험이 커집니다. 전문 서비스 기술자는 이 사실을 숙지하고 필요한 예방 조치를 취하도록 하십시오.

1. General Information

Maintenance Approach

The diagnostic information in this manual leads you to the correct field replaceable unit (FRU) or part. Use the error code charts, symptom index, and service checks to determine the symptom and repair the failure. The removals in the Repair Information chapter may help you identify parts.

After you complete the repair, perform tests as needed to verify the repair.

Standard Inspection and Cleaning Procedure

- Switch off Printer power, and disconnect the AC power cord from the wall outlet.
- Remove and inspect the photodevelopers and toner cartridges, shielding them from strong light.
- Inspect the interior of the printer, removing foreign matter such as paper clips, staples, pieces of paper/transparencies, paper dust, hair, oil, grease or toner.
- Clean the printer interior using a lint-free cloth, dampened slightly with cold water. Do not use solvents or chemical cleaners to clean the printer interior.
- Use only the specified oil or lubricant on printer parts (some service parts are pre-lubed from the factory).
- Inspect and, if necessary, clean all rubber/plastic and D rollers with A lint-free cloth, dampened slightly with cold water. Dry the rollers with a lint-free cloth.
- While cleaning, inspect the interior of the printer for damaged wires, loose connections, toner leakage, loose springs, and damaged or worn parts.
- Be sure the printer is on a single, flat, strong table or desk top.
- Inspect all supplies (OCR, Cartridges, photodeveloper/toner cartridges, belts, fuser CRUs) and paper sources (cassettes, trays, feeders, duplex drawers, finishers, mailbox trays) for obvious damage and proper installation (paper under corner bucklers, paper guides not too tight) Inspect for correct media usage (paper, transparencies, labels).

- Print a Demo page.
- If additional paper sources are installed, print a Demo page from each of these, (if possible).

Note: Failure to print from an additional tray or feeder may imply one or more pins are bent in the mating connector.

Return Parts

Engineering periodically analyzes returned parts for failure modes. Please Include a printed test (DEMO) page, before and after the repair, and tag any returnable parts with a description of the failure.

Recommendations For Service

Before leaving the printer check the following:

- Be sure printer is on a single, flat, strong tabletop. This is very important for color printers that use belts. Check and set registration as necessary.
- Shake all cartridges and be sure they are correctly installed and fully seated.
- While the cover is open, wipe any residual toner from the LEDs using a lint free cloth.

Tools

The removal and adjustment procedures require the following tools and equipment:

- Magnetic tip Phillips screwdrivers, large and small
- Flat-blade screwdrivers
- Analog volt ohmmeter (a digital volt ohmmeter may also be used)
- Needle nose pliers
- Tweezers, C-ring pliers
- Magnifier (10 times or equivalent)
- 6-angle wrench (1.5 mm)

When you make voltage readings, always use frame ground unless another ground is specified.

Serial Number

Open the front door, the serial number is located as shown. The serial number is also on the menu settings page you can print from the Tests Menu.

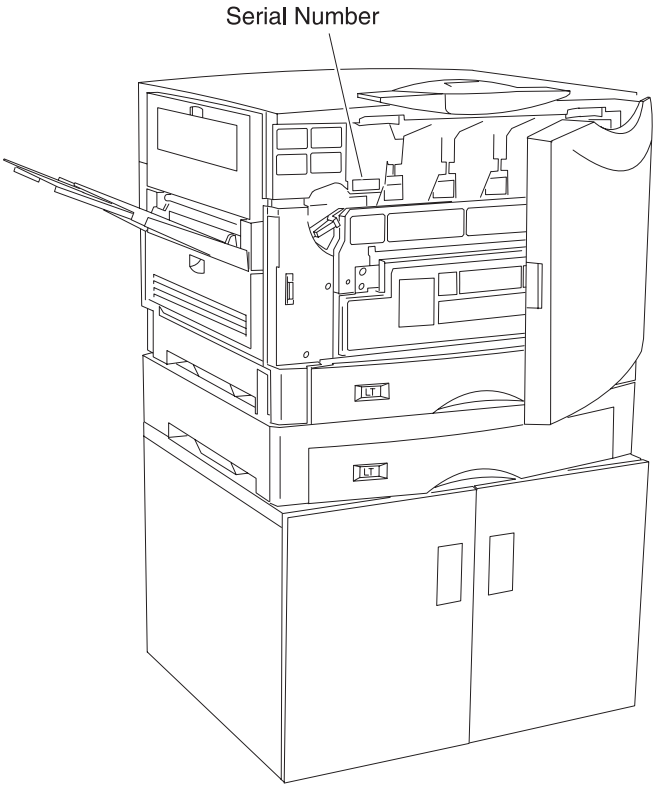

Abbreviations

ASIC	Application-Specific Integrated Circuit
CSU	Customer Setup
DRAM	Dynamic Random Access Memory
EPROM	Erasable Programmable Read-Only Memory
EP	Electrophotographic Process
ESD	Electrostatic Discharge
FRU	Field Replaceable Unit
HVPS	High Voltage Power Supply
LAN	Local Area Network
LASER	Light Amplification by Stimulated Emission of Radiation
LCD	Liquid Crystal Display
LED	Light-Emitting Diode
LVPS	Low Voltage Power Supply
NVRAM	Nonvolatile Random Access Memory
OEM	Original Equipment Manufacturer
PICS	Problem Isolation Charts
PIXEL	Picture Element
POR	Power-On Reset
POST	Power-On Self Test
PQET	Print Quality Enhancement Technology
RIP	Raster Image Processor
ROS	Read-Only Storage
SRAM	Static Random Access Memory
UPR	Used Parts Replacement
V ac	Volts alternating current
V dc	Volts direct current

Processes and Configuration

In this printer, the toner of four colors (magenta, cyan, yellow and black) melts and deposits on paper, dots which record color image information. This printing process is called the electrophotography process.

Electrophotography Process

In the electrophotography process, electrically charged toner, exposes, develops, transfers, and is cleaned with an aluminum photosensitive drum. A photoconductive layer forms on the surface of the drum when the drum is exposed to light.

The surface of the photosensitive drum is negatively charged, forming the electrostatic image on the surface of the photosensitive drum. This charge is directed to the photosensitive medium at a low voltage, reducing the generation of ozone to a very low level. When the drum surface is charged, the image is recorded by irradiating light from the LED printhead, forming the electrostatic image. The LED printhead array along with the Selfoc lens array provide a single-dot line of the image, in a one-to-one arrangement. The image data from the printhead controller causes the LED to emit light in black dots. These black dots form an image of dots on the photosensitive drum.

The LED printhead minimizes the displacement of images during the color print process, when images of multiple printheads overlap, causing dot position accuracy to be much higher. Since light from the volume of the LED array varies depending on the LED printheads, the light emitting value is recorded in the EPROM of the printer controller. When the LED printhead is replaced, the light emitting value should be entered for each printhead while the printer is in maintenance mode.

Since the LED printhead and EPROM on the printhead controller board of this printer are paired, the EPROM on the printhead controller board should also be replaced whenever the printhead is replaced.

Development Unit

Toner forms the electrostatic image on the photosensitive drum during exposure. The single component, non-magnetic toner and the lusterless color toner are weather-resistant, and fade little under ultraviolet rays. This is helpful in saving documents.

Toner in the hopper is agitated and supplied to the development roll by the supply roll. A (conductive rubber) doctor blade is fitted to the development roll. Toner enters between the development roll and doctor blade by the rotating development roll and is negatively charged, forming the electrostatic image on the photosensitive drum. Toner attaches to the bright portion of the photosensitive drum per the voltage of the development roll.

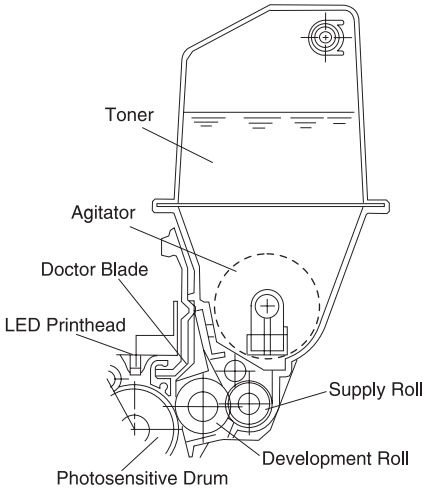

Transfer Unit

Paper feeds electrostatically by the transfer belt and is carried to the transfer unit which turn at the speed of the photoconductor drum. A charge roller applies a positive charge to the paper. The toner image formed on the photoconductor drum is transferred to the paper from the back side by the positive dc voltage applied to the transfer sheet, which is in contact with the paper through the transfer belt.

Cleaning Unit

Toner remaining on the photosensitive drum following transfer, is scraped away with the cleaning blade, and collected in the recovery bag as waste toner. Residual toner on the photosensitive medium is removed by the eraser.

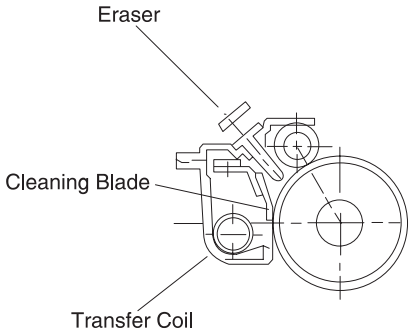

Paper Feeding / Fusing

The main unit drive is composed of drives 1 and 2. Drive 1 feeds paper, stands by, drives the belt unit, separates, fuses, feeds the face-up delivery unit, and drives the photodeveloper and toner cartridge by rotations of the dc motor. Drive 2 drives the face-down delivery unit by rotations of the stepper motor.

The expansion paper feeder and the duplex unit use independent motors to drive the paper delivery unit.

Drive System

Drive 1, composed of a 100 dc motor and gear unit, feeds the registration paper from the paper feeder and drives the belt unit, photodeveloper / toner cartridge, fusing unit, and face-up delivery unit. The motor rotates by the ON signal from the printer controller/ motor drive unit and sends a rotation synchronization detection signal to the motor drive unit.

Note: The gear unit of drive 1 is adjusted in phase and should not be disassembled.

Drive 2, composed of a hybrid stepping motor and gear unit, drives the face-down delivery unit.

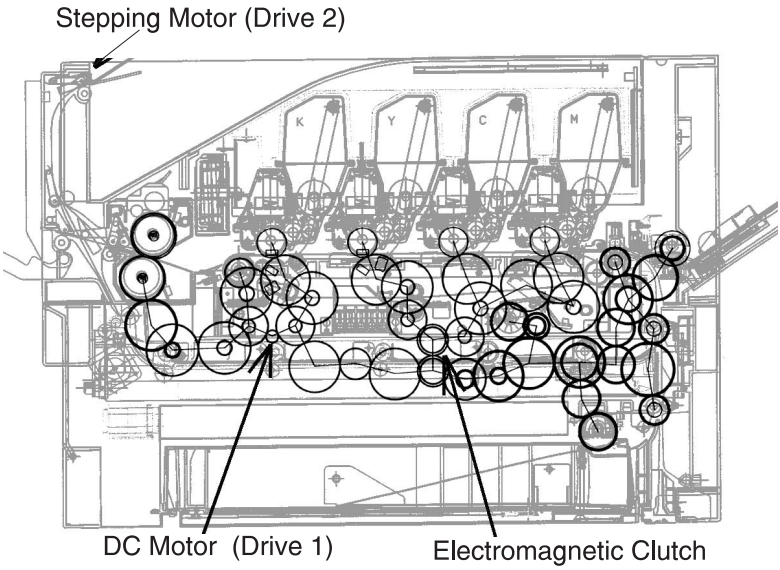

Paper Feeding

The paper feeder is a two-way system composed of the multi-paper feeder (100 sheets maximum) and an integrated 550 sheet tray). Optionally, the expansion paper feeders (550 sheets) can be increased to four layers. A high capacity paper feeding system (3,000 sheets) may be used. Combining the multi-paper feeder, expansion paper feeders, and high capacity paper feeding system the printer has a maximum paper supply of up to 5,850 sheets.

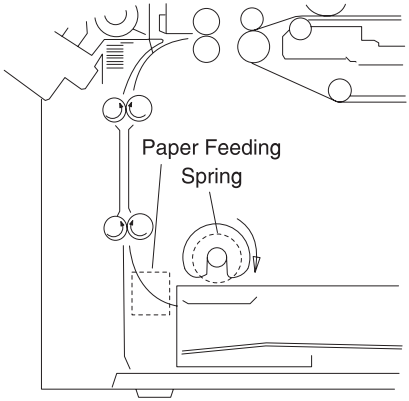

Cassette Paper Feeder

The paper feeding solenoid turns on by the signal from the printer controller. The paper feeding roller interconnected with drive 1, rotates with the spring clutch and picks the paper in the paper cassette.

Multi-Purpose Feeding

The multi-paper feed solenoid turns on by the signal from the printer controller. The multi-purpose feed roll interconnected with the drive 1 through the spring clutch, rotates and picks the paper in the multi-purpose feeder.

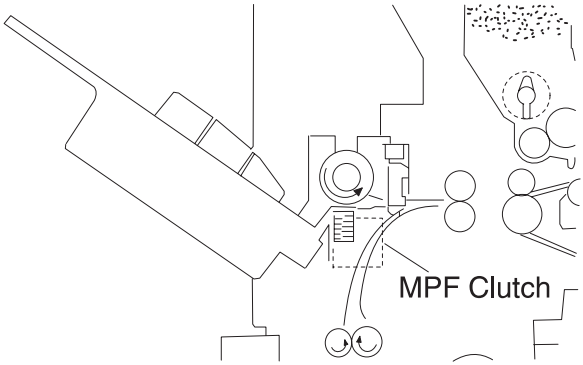

Registration Unit

Media temporarily stops (registration) when adjusting the paper leading edge parallel with that of the image, or when adjusting the timing with the black image.

The upper and lower registration rolls are arranged in parallel with the photosensitive drum for black imaging. The lower registration roll incorporates a registration clutch which feeds or stops the paper.

In the forward direction of the registration roll, a registration sensor (photo interrupter) is provided to detect paper fed from the paper feeder and to stop paper jam feeding.

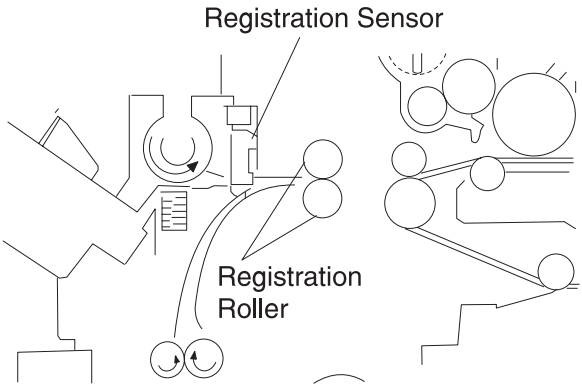

Separation Unit

The transfer belt and paper are separated with the belt drive roll by separation fingers.

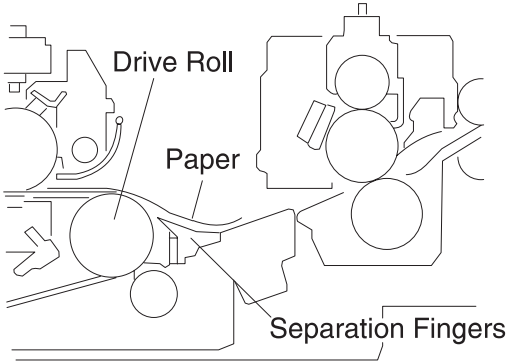

Fuser Unit

By applying heat and pressure, the image is melted and fused to the paper.

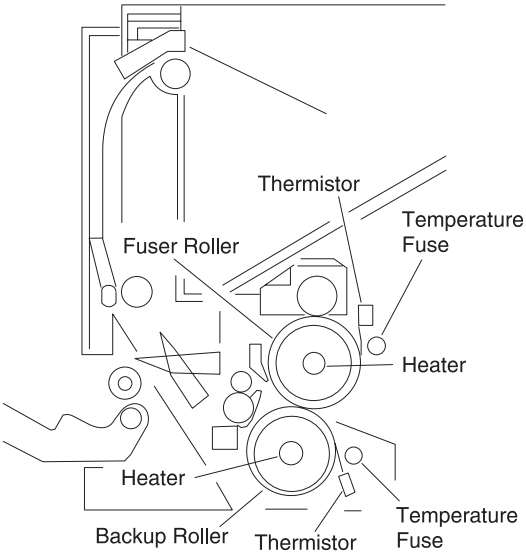

The upper and lower rollers are heated and pressure-fitted. A heater is positioned in the roller tube and a thermistor and thermostat remain in contact with the outside of the tube. Separation fingers are attached near the upper roller to separate the paper from the roller.

Each thermistor sends the surface temperature of the roller to the printer controller. The printer controller turns the heater on or off according to the voltage of each thermistor. If the controller fails and the temperature of the roller exceeds specifications, the temperature fuse (TCO) connected to each heater opens, preventing overheating.

Delivery

After completing the fusing process, paper is discharged from the printer. The delivery sensor detects the paper condition and the FU/FD deflector switches between the face-up and face-down paper delivery. The paper from the fuser pulls down the sensing lever turning on the delivery sensor (photo interrupter). If the delivery unit remains on longer than specified, the printer controller determines that the printer is jammed, and the paper delivery flap lever switches to either face-down or face-up.

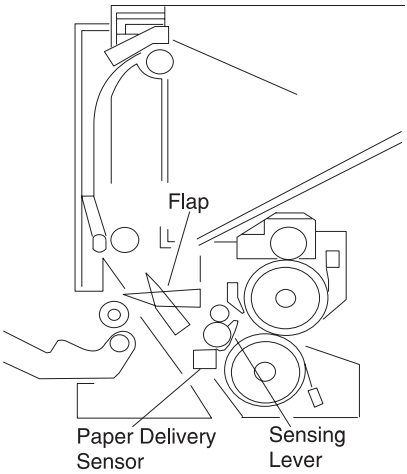

Belt Unit

After passing through the registration unit, paper is electrostatically fed by the transfer belt through the positively charged feed roll at the inlet of the belt unit and fed by the running belt. The belt runs at the same speed as the photosensitive drum causing the image on the C, M, Y and K developer to transfer to paper.

Since the photosensitive drum has a small diameter and the paper is electrostatically fed by the transfer belt, the paper is easily separated, after toner image transfer, and fed to the next developer. Excess toner is scraped from the drum with a cleaning blade and recovered into the waste toner bottle.

Adjust the registration when the belt unit is replaced. The registration is adjusted at the leading edge of the image or by adjusting the color image. This should be adjusted in maintenance mode, when the belt unit is replaced.

The transfer belt is conductive and seamless. If the transfer belt is damaged, toner can cling to the belt and contaminate the paper. When fingerprints or other stains appear on the belt, wipe them away with a dry cloth or cloth moistened with alcohol.

A density sensor is positioned facing the belt drive roller for automatic density adjustment and registration adjustment. A mechanism is provided to clean the sensor surface, which is interconnected with the opening and closing of the front cover.

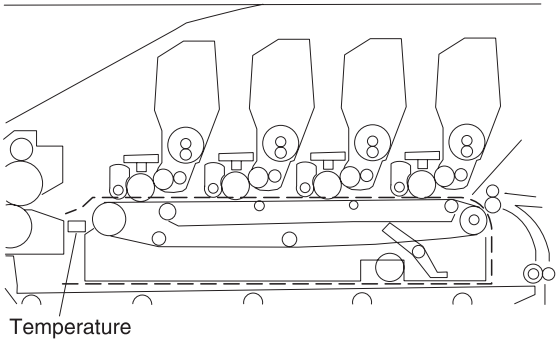

Belt Up/Down

In monochrome printing, switching to color printing is not required. To avoid unnecessary wear of the photosensitive drum by the cleaning blade, this operation is stopped with the electromagnetic clutch in drive 1. The transfer belt is lowered so as not to touch the photosensitive drum during color printing.

The transfer belt moves up and down with the switching shaft cam by the electromagnetic clutch in drive 1. The belt position is used to detect the cam position with the photo sensor, using the fan shaped light blocking plate attached to the switching shaft. Printing with the transfer belt lowered is called monochrome mode and color printing is called color mode.

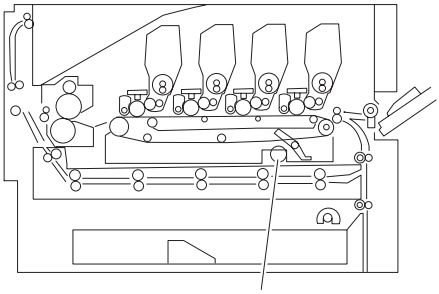

Expansion Paper Feeder

The optional expansion paper feeder can be installed at the lower part of the main unit. Including the main unit, up to five layers of cassettes can be used for cassette paper feeding.

Duplex Unit

A duplex unit can be optionally installed in the main unit, allowing two-sided printing.

Selecting **Paper feeding**, **Registration**, **Transfer**, **Separation**, **Fusing**, or **Face-Down paper discharging** with the pulse motor in the duplex unit, feeding is stopped before the paper is delivered. Paper delivery is then reversed and fed to the duplex unit.

Paper fed with the duplex unit stops once, and the center position is corrected by the operation of the side guide plate. Paper is then re-fed by the printer controller signal to the main unit, and, following printing on the back side, is delivered to the normal feeding path.

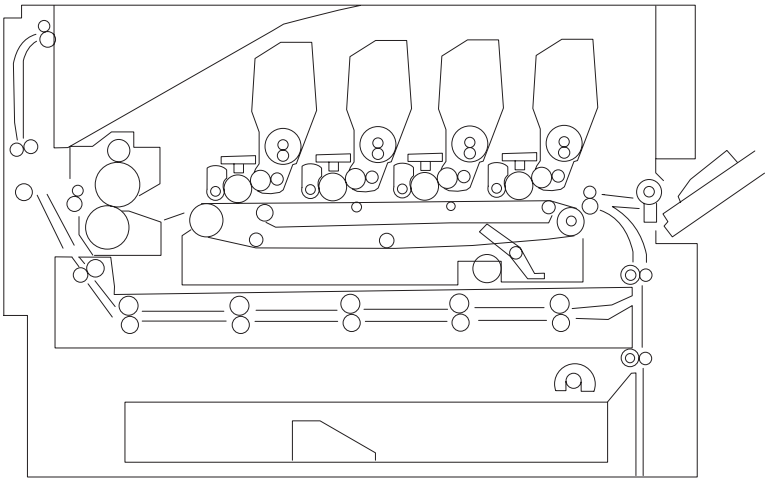

Printing Mode

Usually printing is performed in normal mode, OHP mode, thick paper mode, and envelope/postcard mode. The mode is switched by a command from the interface controller.

Mode	Paper/Media Weight	PPM (Color)
Normal	16 - 29 lb	28
Thick paper	32 lb (glossy)	22
Envelope/postcard	90 lb or more	10
OHP	Transparency	6

OHP Mode

OHP mode is used for improving color printing on transparencies.

With an overhead projector (OHP), light transmitted through OHP paper (original document) projects an image on the lens. If the smoothness of the surface of the toner image on the OHP paper is too low, transmission is prevented due to the diffused reflection. Images projected in color printing appear in monochrome.

When non-offset type color toner is used, the process speed in the OHP mode is decreased, causing toner to melt sufficiently with the fusing unit, while the fusing temperature is set higher than usual to increase the smoothness on the surface of the toner image.

This mode restricts paper feeding to multi-paper feeding, not cassette feeding.

Thick Paper Mode

Thick paper mode is used to improve print quality on thick paper. (More than 105 g/m^2 (90kg)).

Envelope / Postcard Mode

Envelope / postcard mode is used to improve printing quality on thick paper of small width. In this mode, the fusing temperature is set higher than usual and transfer voltage is switched according to the temperature.

Operation Mode

Operation modes such as **sleep mode** and **registration mode** are switched by command from the interface controller.

By carefully selecting print media and loading them properly, you can avoid most paper jams. If jams do occur, follow the steps outlined in this section.

To resolve the paper jam messages, you must clear the jammed area and then press Go to clear the message and resume printing. The printer prints a new copy of the page that jammed if Jam Recovery is set to On or Auto; however, the Auto setting does not guarantee the page will print.

Clearing Paper Jams

200 Paper Jam <x> Pages Jammed (Check Areas A-F)

A 200 Paper Jam message indicates that paper is jammed. The display alternates between 200 Paper Jam <x> Pages Jammed and Check Areas A-F.

If there is a paper jam when you turn the printer on, the second line of the 200 Paper Jam message will be blank. To resolve the message, you must clear all paper from the paper path. Check and clear areas A through F.

Check Areas A,B

This message indicates a paper jam in the transfer belt, fuser, or output roller area. To clear areas A–B:

1. Open the top cover. Never touch the photodeveloper drum on the underside of the toner cartridge. The paper may be covered with un-fused toner, which can stain clothing.
2. Remove any paper on the transfer belt.
3. If the paper source was the multipurpose feeder, check the area between the multipurpose feeder and the transfer belt. Do not use any pointed objects to remove the paper. This could cause permanent damage to the transfer belt.
4. Check the fuser area and top cover for additional jams.
5. If there is no jam in the fuser area or top cover, close the top cover and front door, and then press **Go**. If a jam is present, continue with step 4.
6. Lift the fuser pressure release lever and slowly pull the paper out of the fuser toward the inside of the printer.
7. Rotate the fuser pressure release lever down.The top cover will not close until the lever is in the down position.
8. Check the top cover for additional jams.
9. If there is no jam in the top cover, close the top cover and front door, and then press **Go**.
10. Remove the jam from the top cover.
11. Close the top cover and the front door.

Check Area C

Jams that cause a Check Area C message require opening the duplex jam access door. If you are printing on small paper, the following steps may not clear the jam. See **“Removing Small Size Paper From the Duplex Unit” on page 1-22**.

1. Open the duplex jam access door on the right side of the printer.
2. Remove the jam.
3. Press **Go**.

Note: If the paper jam message continues, check and clear all paper from the paper path.

Check Area D

This message indicates a paper jam in the duplex unit area. To clear area D:

1. Open the duplex jam access door on the right side of the printer.
2. Gently pull out the duplex unit.
3. Turn the paper forwarding dial counterclockwise. If the paper advances out of the duplex unit, remove the jam and go to step 7. If the paper does not advance, go to step 4.
4. Open the duplex unit covers.
5. Remove the jam.
6. Close the duplex unit covers.
7. Push the duplex unit back into the printer.
8. Close the access door.
9. Press **Go**. If the paper jam message continues, check and clear all paper from the paper path.

Removing Small Size Paper From the Duplex Unit

When printing on both sides of A5 or other small size paper, you may need to partially remove the duplex unit to clear the jam.

1. Turn off the printer.
2. Open the duplex unit door.
3. Loosen the two screws.
4. Pull out the duplex unit far enough to see the duplex unit inlet.
5. Remove jam from the duplex unit inlet.
6. Slide the duplex unit in.
7. Align the thumbscrews on the duplex unit with the holes in the printer.
8. Tighten the thumbscrews to secure the duplex unit.
9. Close the duplex unit door.

Check Area E

This message indicates a jam in the top, middle, or bottom optional drawer paper path area. If you have a high capacity feeder, pull the feeder away from the printer.

1. Open the jam access door on the top optional drawer.
2. Remove the jam.
3. Close the jam access door.
4. Open the jam access door on the middle optional drawer.
5. Remove the jam.
6. Close the jam access door.
7. Open the jam access door on the bottom optional drawer.
8. Remove the jam.
9. Close the jam access door.
10. Press **Go**.

Note: If the paper jam message continues, check and clear all paper from the paper path.

5055-01x

Check Area F

1. Pull the high capacity feeder away from the printer.
2. Open the jam access door on the top optional drawer.
3. Remove any jams.
4. Close the jam access door.
5. Slide the high capacity feeder until the feeder locks to the docking frame. When the feeder is in the correct position, you hear a click.
6. Press **Go**.

Note: If the paper jam message continues, check and clear all paper from the paper path.

240 Paper Jam Check MP Feeder

1. Slowly pull the jam straight out of the multipurpose feeder. If the paper will not come out, continue.
2. Open the top cover.
3. Remove the paper on the transfer belt.
4. Close the top cover.
5. Press **Go**.

24<x> Paper Jam Check Tray <x>

Jams in five areas result in a 24<x> Paper Jam message, where x represents the tray number where the jam has occurred. Paper jam messages 241–244 indicate a jam has occurred in one of the trays.

241-244 Paper Jam

1. Pull out the tray indicated on the display.
2. Remove any wrinkled or creased paper.
3. Push down on the remaining paper in the tray until the bottom plate clicks into place.
4. Close the tray.
5. Press **Go**.

Note: If the paper jam message continues, check and clear all paper from the paper path.

249 Paper Jam Check Tray <x>

A 249 Paper Jam Check Tray <x> message indicates a jam has occurred in the high capacity feeder.

1. Open the top cover.
2. Remove the jam.
3. Close the top cover.
4. Press **Go**.

High Capacity Paper Feeder (HCPF)

Paper Feed and Separation Mechanism

The high capacity paper feeder consists of a tray and paper transfer. The paper feed and separation mechanism uses a friction roller separation and paper feed system with a non-contact magnet type maintenance-free torque limiter.

When the paper feed clutch turns on, the paper feed roller shaft rotates and the paper feed roller is driven with the one-way clutch. The call roller rotates with the relay gears to feed the top paper. The reverse roller rotates along with the paper feed roller.

During paper feed, if two sheets feed, the reverse roller rotates by the torque limiter, returning the lower sheet. When the paper feed sensor (reflection type sensor) detects the paper, the pickup solenoid turns off to raise the call roller, transferring the paper to the registration roller.

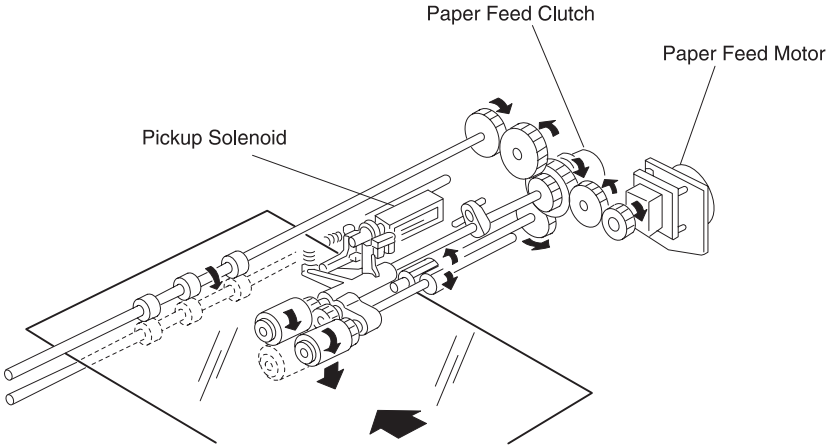

Registration Operation

When the paper feed motor rotates, the transfer roller is driven with relay gears. The reverse roller shaft rotates the gears on the paper feed clutch in the direction of the arrow and stops by the friction force of the paper feed roller.

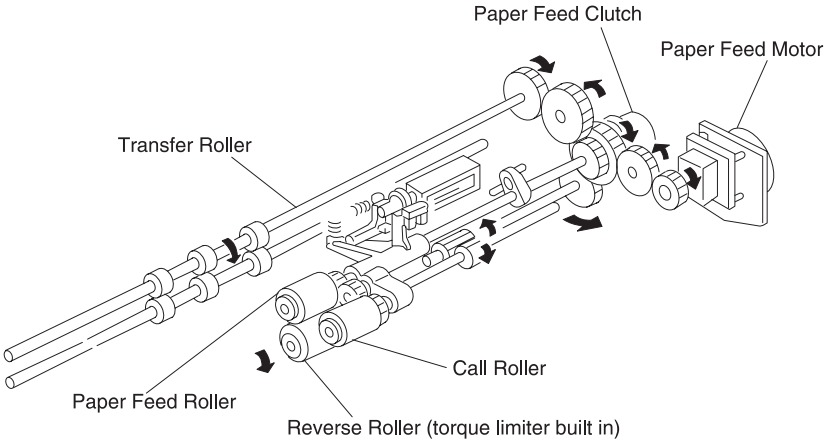

Tray Up/Down Mechanism

The driving force of the tray motor transmits to the tray driving pulley through the gears. Moving the tray moves up and down through the tray driving belt. After the paper loads, and the top cover is set, the pickup solenoid turns on to lower the call roller. When the tray moves up, the call roller is raised by the top surface of the paper, and the shield plate on the up sensor is released from the up sensor which turns off the tray motor.

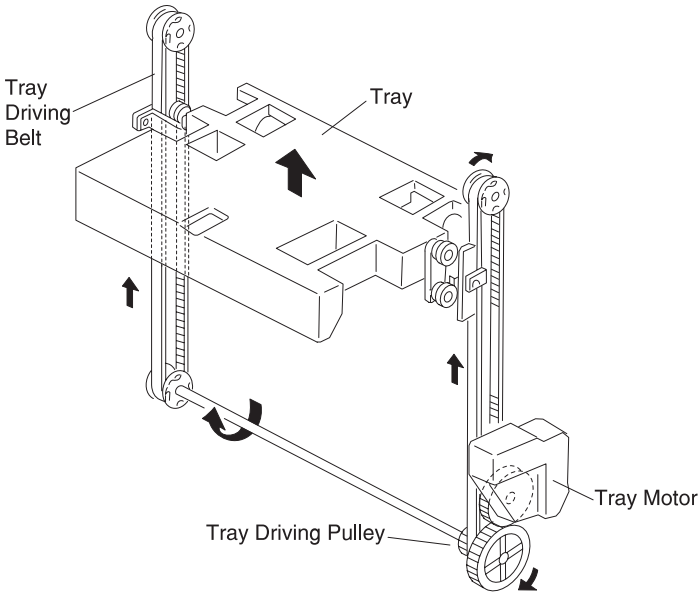

Also, when the top surface of the paper lowers during printing and the up sensor is shielded, the tray motor again rotates forward to raise the paper.

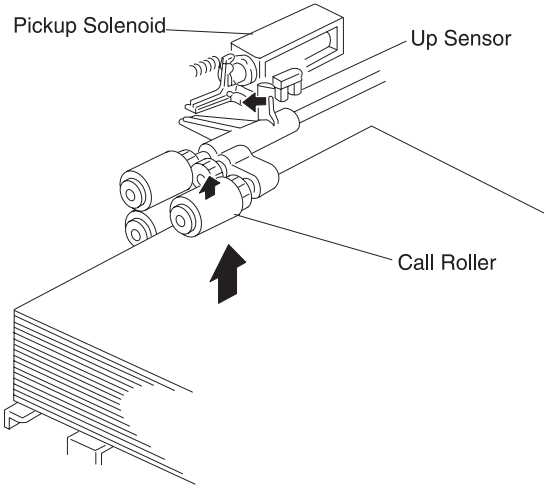

When the down button is pressed, the tray motor reverses to move the tray down. During the down motion of the tray, as the top surface of paper passes the paper level sensor, the tray motor stops. The tray moves down by about 500 sheets. The down sensor detects the tray lower limit position.

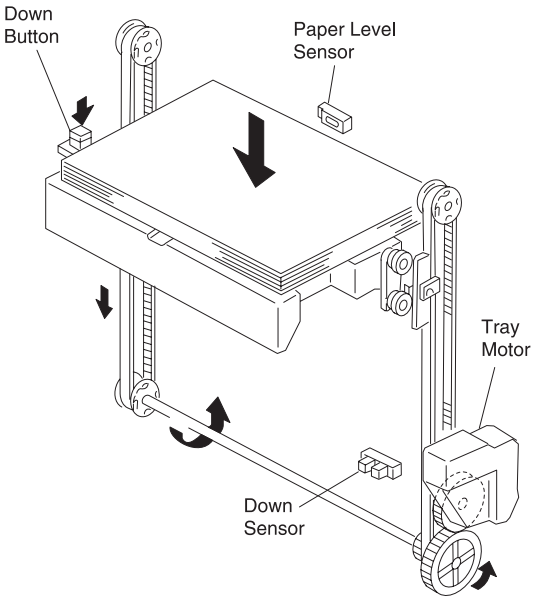

Tray Up Condition

Tray up motion stops when the:

- Up sensor is OFF (not shielded)
- Power cord is connected and the joint SW is ON
- Up sensor is ON (shielded) during printing
- Top cover is closed, or when up sensor is ON

Tray Down Condition

Tray down motion stops when the:

- Paper level sensor is OFF
- Down button is pressed
- Paper end is detected

Size Detection Mechanism

The paper size can be switched between A4 and letter (11 inches) by changing the side fence position.

The paper size sensor 2 detects the fixing screw 2 at the A4 position.

The paper size sensor 1 detects the fixing screw 1 at the letter position. Tray up motion stops when the up sensor is OFF, not shielded.

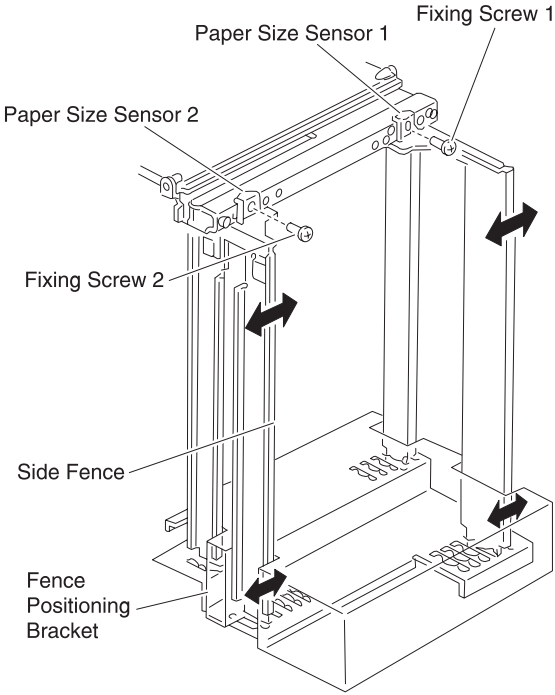

Residual Paper Detection Mechanism

The residual paper quantity in the tray is detected with four photo interrupters. The quantity of pages remaining in the sheet feeder, displays in the following increments:

- Near end, about 80 sheets
- About 300 sheets
- About 1,000 sheets
- About 2,000 sheets

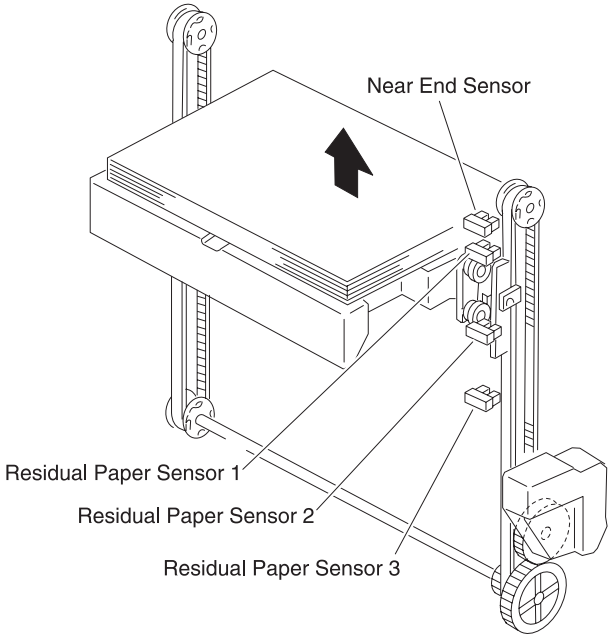

Paper End Detection

A reflection type sensor is provided on the top stay to detect the paper top surface and the paper end.

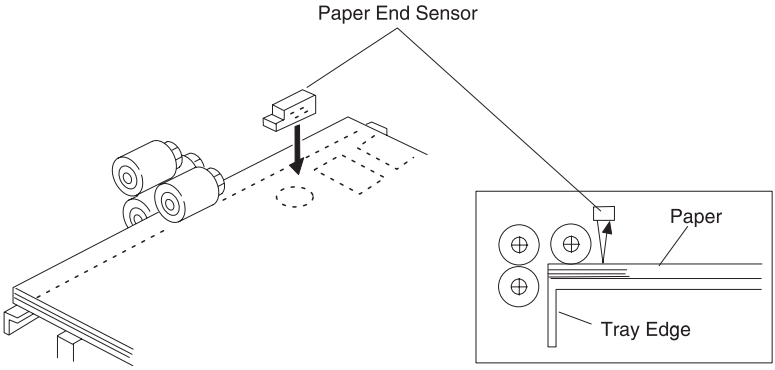

Maintenance Mode

DIP Switch Specifications

The DIP switches on the high capacity paper feed board have the following functions:

- Function switching and initial setting of the standard machine or optional machine.

DIP Switch	Function Switch		Maintenance Switch		Description
	4	3	2	1	
OFF					1 Standard machine initial setting
ON	X	X			
OFF	X				2 Optional machine initial setting
ON		X			

- Maintenance switch (test mode selection) is valid without connecting to the printer controller board.

DIP Switch	Function Switch		Maintenance Switch		Test paper feed mode (stand alone)
	4	3	2	1	
OFF					Test OFF mode
ON			X	X	
OFF			X		Linear velocity 101 mm/s Thick paper mode
ON				X	
OFF			X	X	Linear velocity 129 mm/s Plain paper mode
ON					
OFF				X	Linear velocity 180 mm/s
ON			X		

- Test paper feed operation.

1. Turn on the docking safety switch with a non-metallic object. The interface cable with the printer controller board need not be connected.
2. Close the top cover or manually activate the cover switch.
3. Load paper.
4. Wait until the paper tray stops and the pickup solenoid turns off
5. With the cover closed or with the cover switch activated, press and hold the tray down button for more than 1/2 second. In steps 1 and 2, paper feeding starts and is continuously fed until the cover is opened. The test ends when the tray motor stops and the paper ejects or the tray down button is released.

- Test Sequence

1. The tray motor moves the tray to the upper limit.
2. The pickup solenoid activates then de-activates.
3. When the tray down switch is pressed for longer than 1/2 second, the paper feed motor starts, the paper feed clutch operates and feeding begins.
4. Feeding can be stopped by releasing the tray down button.

High Capacity Paper Feed Sensor / Switch Test

The condition of each sensor can be checked from the lighting of LEDs on the high capacity paper feed board. When each sensor operates with the power supplied, the associated LED lights.

To perform the test:

Interrupt the photointerrupter sensor signal or actuate the micro-switch being tested while observing the associated LED on the high capacity paper feed board.

LED	Sensor Name
1	Paper size sensor 1 switch (letter size 11 inches)
2	Paper size sensor 1 switch (A4 size)
3	Residual paper sensor 1 switch
4	Residual paper sensor 2 switch
5	Residual paper sensor 3 switch
6	Residual paper sensor 4 switch
7	Paper level sensor switch
8	Lower limit switch
9	Cover open sensor switch
10	Docking sensor switch
11	Upper limit switch
12	Paper sensor switch
13	Paper feed sensor switch

2. Diagnostic Information

The diagnostic information in this chapter leads you to the failing part. Before you replace an entire assembly, determine if just the defective part is available in the parts catalog. Use the error code tables, symptom table, service checks and the diagnostic aids chapter to determine the symptom and repair the failure. The removal procedures in the Repair Information chapter may help you identify parts. After you complete the repair, perform the appropriate tests to verify the repair.

If an error is displayed, locate it in the **“Service Error Message Table” on page 2-4**, the **“Attendance Messages g” on page 2-25**, or the **“Symptom Table” on page 2-52** and take the appropriate action.

If an error message appears while you are working on the printer, go to the error message table and take the indicated action.

Adjustments and Procedures Following Parts Replacement

Note: When trouble shooting, or prior to making any adjustment to print quality, always be sure:

- The printer is installed on a level rigid surface.
- The photodevelopers are never exchanged. Do not exchange a black photodeveloper for a color photodeveloper, as they have different surface phase counts.
- The Alignment Page is used when adjusting print registration.

Whenever you replace any of the following parts be sure to perform the required adjustments or procedures. The adjustments are in the Repair Information and Diagnostic Aids chapters.

Printer Controller Board/Printer Control EPROM (U5)

If you replace the printer controller board, remove EPROM (U5) and install it on the new board. Also check the printhead alignment.

If you change the EPROM, the following items must be checked and adjusted in the diagnostic mode.

- LED Printhead Light Quantity
- Printer Alignment (X, Y, and Theta)
- Counters
- Configuration ID

RIP Controller Board

If you replace the RIP controller board be sure to move the solid state drive, memory, and option cards from the old card to the new one.

Transfer Belt

If you replace the transfer belt, check the printer alignment (X, Y, and Theta), adjusted in diagnostic mode.

LED Printhead Controller Board or LED Printhead

If you replace the LED printhead controller board or LED printhead, the following items must be checked and adjusted in diagnostic mode:

- LED printhead light quantity
- Printer alignment (X, Y, and Theta)

Start

Initial Check

Before you start troubleshooting, check the following:

Installation Environment

- The power supply line voltage is plus or minus 10% of the rated line voltage.
- The machine is securely installed on a level surface in a well-ventilated place.
- The room temperature is between 10 and 32°C (50 and 90°F) and the relative humidity between 20 and 80%.
- Avoid sites generating ammonia gas, high temperature, high humidity (near water faucets, kettles, humidifiers), cold spaces, near open flames, and dusty areas.
- Avoid sites exposed to direct sunlight.

Print Paper Checks

- Be sure to use the recommended paper for this printer.
- Check the paper for dampness. Make a trial print with paper from a newly opened package, and check the result.

Printer Messages

The printer displays three types of messages: service messages, status messages, and attendance messages. *Service messages* indicate a problem that requires a service technician. *Status messages* provide information about the current state of the printer, requiring no action. *Attendance messages* alert the operator to printer problems that require operator intervention.

Service Error Message Table

900 - Unrecoverable Software Error (Operator Manual)

```
910 Service
Motor Error
```

910 - Drive Motor Error

Step	Questions / Actions	Yes	No
1	Are connectors CN1 and CN5 on the motor drive board connected properly?	Go to step 2.	Connect CN1 and CN5.
2	Is connector CN33 on the printer controller board connected properly?	Go to step 3.	Connect CN33.
3	Is there an abnormal load on the toner or drum unit?	Replace the toner or drum unit.	Replace the printer controller board and go to step 4.
4	Did replacement of the printer controller board solve the problem?	Problem solved.	Replace the motor drive board and go to step 5.
5	Did replacement of the motor drive board solve the problem?	Problem solved.	Replace the drive motor.

911 - Paper Exit Motor Error

Step	Questions / Actions	Yes	No
1	Is connector CN4 on the printer controller board securely connected?	Replace the paper exit motor and go to step 2.	Plug the connector in securely.
2	Did replacement of the paper exit motor solve the problem?	Problem solved.	Replace the printer controller board.

912 - High Capacity Paper Feed Motor Error

Step	Questions / Actions	Yes	No
1	Is connector CN40 on the printer controller board securely connected?	Go to **“High Capacity Paper Feed (HCPF) Service Check” on page 2-57**.	Plug the connector in securely.

917 - RIP Fan Error

917 Service
Fan Error

Step	Questions / Actions	Yes	No
1	Is connector J5 on the RIP board connected properly?	Go to step 2.	Properly connect J5.
2	Is 24 V dc present between pins 1 and 3 of connector J5 on the RIP board?	Replace the RIP fan.	Replace the RIP board.

918 - Main Unit Fan Error

Step	Questions / Actions	Yes	No
1	Is +24 V present between pins 1 and 3 on connectors CN17 (upper left fan) and CN5 (upper right fan) on the printer controller board?	Replace the failing fan.	Replace the printer controller board.

919 - Power Supply Fan Error

Step	Questions / Actions	Yes	No
1	Is +24 V present between pins 1 and 3 of connector CN6 on the printer controller board?	Replace the power supply fan.	Replace the printer controller board.

920 - Fuser Error - Fuser Heater Trouble

92x Service
Fuser Error

Step	Questions / Actions	Yes	No
1	Replace the fuser. Did this fix the problem?	Problem solved.	Return the fuser, replace the power supply 2 and go to step 2.
2	Did replacing power supply 2 fix the problem?	Problem solved.	Return power supply 2 and replace the printer controller board.

923 - Upper Fuser Thermistor Open Error

Step	Questions / Actions	Yes	No
1	Is connector CN44 on the printer controller board connected properly?	Disconnect CN44 and turn the printer on. Go to step 2.	Plug the connector in securely.
2	Is error 923 displayed?	Power off and reconnect CN44. Go to step 3.	Replace the printer controller board.
3	Power the printer off and short pins 1 and 4 of CN44 and power on. Is error 923 displayed?	Replace the fuser.	Replace the printer controller board.

924 - Lower Fuser Thermistor Open Error

Step	Questions / Actions	Yes	No
1	Is connector CN44 on the printer controller board connected properly?	Disconnect CN44 and turn the printer on. Go to step 2.	Plug the connector in securely.
2	Is error 924 displayed?	Turn the printer off and reconnect CN44. Go to step 3.	Replace the printer controller board.
3	Power the printer off and short pins 8 and 11 of CN44 and turn the printer on. Is error 924 displayed?	Replace the fuser.	Replace the printer controller board.

925 - High Pressure Controller Error

Step	Questions / Actions	Yes	No
1	Is connector CN42 on the printer controller board connected properly?	Replace the printer controller board. Go to step 2.	Plug the connector in securely.
2	Did replacing the printer controller board fix the problem?	Problem solved.	Replace the high voltage power board (HVU).

926(K), 927(C), 928(Y), 929(M) - Toner Sensor Error

92x Service
Toner Sensor

Step	Questions / Actions	Yes	No
1	Is the toner cartridge the correct type for the printer?	Go to step 2.	Recommend the customer replace the cartridge with the correct type.
2	Is the toner cartridge encoder wheel dirty?	Clean the encoder wheel and toner sensor.	Go to step 3.
3	Replace the toner cartridge for the color with the error. Did this fix the problem?	Problem solved.	Go to step 4.
4	Test the sensors. While actuating the sensor, does the voltage fluctuate between 0 V and +5 V between pins 1 and 2 on connectors CN22(K), CN21(Y), CN18(M), and CN19(C) on the printer controller board?	Replace the printer controller board.	Replace the affected toner sensor.

930 - Yellow Printhead Error

930 Service
Printhead Error

Step	Questions / Actions	Yes	No
1	Is fuse 5 on the printhead control board open?	Replace the printhead control board, cables, and LED printhead.	Replace the printhead controller board.

931 - Magenta Printhead Error

Step	Questions / Actions	Yes	No
1	Is fuse 6 on the printhead control board open?	Replace the printhead control board, cables, and LED printhead.	Replace the printhead controller board.

932 - Cyan Printhead Error

Step	Questions / Actions	Yes	No
1	Is fuse 3 on the printhead control board open?	Replace the printhead control board, cables, and LED printhead.	Replace the printhead controller board.

933 - Black Printhead Error

Step	Questions / Actions	Yes	No
1	Is fuse 4 on the printhead control board open?	Replace the printhead control board, cables, and LED printhead.	Replace the printhead controller board.

934 - Color Drum Sensor Error

934 Service
Drum Sensor

Step	Questions / Actions	Yes	No
1	Is connector CN28 connected properly?	Go to step 2.	Plug the connector in securely.
2	Clean the color drum sensor LED. Did this fix the problem?	Problem solved.	Replace the color drum sensor. Go to step 3.
3	Did replacing the color drum sensor fix the problem?	Problem solved.	Replace the printer controller board.

935 - Black Drum Sensor Error

Step	Questions / Actions	Yes	No
1	Is connector CN27 connected properly?	Go to step 2.	Plug the connector in securely.
2	Clean the black drum sensor LED. Did this fix the problem?	Problem solved.	Replace the black drum sensor. Go to step 3.
3	Did replacing the black drum sensor fix the problem?	Problem solved.	Replace the printer controller board.

936 - 939 Cassette Error

936 Service
Paper Option

Step	Questions / Actions	Yes	No
1	Are connectors CN35 and CN36 on the printer controller board connected properly?	Replace the printer controller board.	Plug the connector in securely.

940 - High Capacity Paper Feed Sensor Error

Step	Questions / Actions	Yes	No
1	Is connector CN40 on the printer controller board connected properly?	Go to **"High Capacity Paper Feed (HCPF) Service Check" on page 2-57**.	Plug the connector in securely.

941 - High Capacity Paper Feed Tray Error

Step	Questions / Actions	Yes	No
1	Is connector CN40 on the printer controller board connected properly?	Go to **"High Capacity Paper Feed (HCPF) Service Check" on page 2-57**.	Plug the connector in securely.

942 - Duplex Error

```
942 Service
Duplex
```

Step	Questions / Actions	Yes	No
1	Is connector CN37 on the printer controller board connected properly?	Replace the printer controller board.	Plug the connector in securely.

945 - Engine Flash Error

945 Service
Engine Flash

Reflash the engine code.

946 - Printer / Printhead Controller Board Communication Error

946 Service
Communication

Step	Questions / Actions	Yes	No
1	Replace the printhead controller board. Did this fix the problem?	Problem solved.	Replace the printer controller board.

948 - Machine ID Error

```
948 Service
Machine ID
```

Step	Questions / Actions	Yes	No
1	Turn the printer off and wait 30 seconds. Turn the printer on. Did this fix the problem?	Problem solved.	Verify proper installation of the EPROMs on both the printer controller board and the printhead controller board. Go to step 2.
2	Are the EPROMs installed correctly?	Replace the printer controller board. Go to step 3.	Install the EPROMs correctly.
3	Did replacing the printer controller board fix the problem?	Problem solved.	Replace the printhead controller board.

952 - NVRAM Chip Failure

```
952 Service
NVRAM Failure
```

Replace the printer controller board.

954 - NVRAM CRC Failure

Replace the RIP board.

955 - Code CRC

```
955 Service
Code CRC <loc>
```

Replace the RIP board.

956 - Processor Failure

```
956 Service
System Board
```

Replace the RIP board.

957 - ASIC Failure

Replace the RIP board.

958 - NAND Failure

```
958 Service
NAND Failure
```

Replace the RIP board.

960 - RAM Slot 1 Bad

```
960 Service
RAM Memory Error
```

Replace RAM Card or the RIP board.

961 - RAM Slot 2 Bad

Replace RAM Card or the RIP board.

962 - RAM Slot 3 Bad

Replace RAM Card or the RIP board.

964 - Emulation Error

```
964 Service
Emulation Error
```

Replace the DLE board. If this does not fix the problem, replace the RIP board.

970 - Standard Network Error

```
970 Service
Standard Network
```

```
970 Service
Network Card X
```

975 - Unrecognizable Network Port

Software error.

976 - Unrecoverable Software Error in Network Port

Software error. To to the **“Options Service Check” on page 2-77** and refer to the network card option section.

978 - Bad Checksum While Programming Network Card

Software error.

979 - Flash Parts Failed While Programming Network Port

Reflash network port.

980 - Face-Up/Down Switching Error

980 Service
Switch Error

Check Area
B

Step	Questions / Actions	Yes	No
1	Is the linkage between the FU/FD deflector and the FU deflector solenoid operating properly?	Go to step 2.	Replace the face-up exit assembly.
2	Is there continuity on the FU deflector solenoid between pins 1 and 2 of CN14 on the printer controller board?	Go to step 3.	Replace the FU deflector solenoid.
3	Test the sensor. While actuating the sensor, does the voltage fluctuate between 0V and +5 V between pins 1 and 2 on connector CN12 on the printer controller board?	Replace the printer controller board.	Replace the FU/FD deflector sensor.

981 - Belt Up/Down Sensor Error

981 Service
Switch Error

Step	Questions / Actions	Yes	No
1	Are connectors CN409 and CN407 on the sensor board connected properly?	Go to step 2.	Plug the connectors in securely.
2	Are connectors CN26 and CN29 on the printer controller board connected properly?	Go to step 3.	Plug the connector in securely.
3	Verify the belt up/ down sensor actuator is properly blocking the sensor by manually operating the belt up/down shaft. Is it properly blocking the sensor?	Go to step 4.	Replace the sensor or actuator as necessary.
4	Clean the belt up/ down sensor. Does this fix the problem?	Problem solved.	Go to step 5.

Step	Questions / Actions	Yes	No
5	Test the sensor. While actuating the sensor, does the voltage fluctuate between 0V and +5 V between pins 8 and 10 of connector CN29 on the printer controller board?	Replace the belt up/ down clutch. Go to step 6.	Replace the belt up/ down sensor.
6	Did replacing the belt up/down clutch fix the problem?	Problem solved.	Replace the printer controller board.

982 - Sensor Controller Error

982 Service
Sensor Control

Step	Questions / Actions	Yes	No
1	Turn the printer off and wait 30 seconds. Turn the printer on. Is error 982 displayed?	Replace the printer controller board.	Problem solved.

983 - Black Gear Sensor Error

983 Service
Gear Sensor

Step	Questions / Actions	Yes	No
1	Is connector CN20 on the printer controller board connected properly?	Go to step 2.	Plug the connector in securely.
2	Clean the gear sensor. Does this fix the problem?	Problem solved.	Replace the K drive unit gear sensor. If the problem remains, replace the printer controller board.

984 - Yellow Gear Sensor Error

Step	Questions / Actions	Yes	No
1	Is connector CN20 on the printer controller board connected properly?	Go to step 2.	Plug the connector in securely.
2	Clean the gear sensor. Does this fix the problem?	Problem solved.	Replace the Y drive unit gear sensor. If the problem remains, replace the printer controller board.

985 - Transfer Belt Thermistor Error

985 Service
Thermistor Error

Step	Questions / Actions	Yes	No
1	Are connectors CN407 and CN408 on the sensor board connected properly?	Go to step 2.	Plug the connector in securely.
2	Is connector CN29 on the printer controller board connected properly?	Replace the transfer belt unit. If the problem remains, replace the printer controller board.	Plug the connector in securely.

986 - Transparency (OHP) Sensor Error

986 Service
OHP Sensor

Step	Questions / Actions	Yes	No
1	Are connectors CN15 (light emitting) and CN7 (light receiving) on the printer controller board connected properly?	Go to step 2.	Plug the connector in securely.

Step	Questions / Actions	Yes	No
2	Test the sensor. While actuating the sensor, does the voltage fluctuate between 0V and +5 between pins 2 and 3 of connector CN7 of the printer controller board?	Replace the printer controller board.	Replace the upper and lower transparency sensor.

992 - Temperature/Humidity Sensor Error

Step	Questions / Actions	Yes	No
1	Is connector CN3 on the printer controller board connected properly?	Go to step 2.	Plug the connector in securely.
2	Replace the temperature and humidity sensor. Did this fix the problem?	Problem solved.	Replace the printer controller board.

993 CPU Error

Replace the printer controller board.

994 - Density Sensor Error

Step	Questions / Actions	Yes	No
1	Are connectors CN406 and CN407 on the sensor board connected properly?	Go to step 2.	Plug the connector in securely.
2	Is connector CN29 on the printer controller board connected properly?	Replace the density sensor. Go to step 3.	Plug the connector in securely.
3	Did replacing the density sensor fix the problem?	Problem solved.	Replace the printer controller board.

Attendance Messages g

Message	Meaning	Action
Activating Menu Changes	The printer is activating changes made to the printer settings.	Wait for the message to clear.
Bin <x> Full	The specified bin is full.	Remove the paper from the bin.
Busy	The printer is busy receiving, processing or printing data.	Wait for the message to clear or press **Menu** to open the Job Menu and cancel the current job.
Canceling Fax	The printer is processing a request to cancel a fax job.	Wait for the message to clear.
Canceling Job	The printer is processing a request to cancel the current print job.	Wait for the message to clear.
Change <x>	The printer is requesting a different type of paper.	Change paper.
Check <device> connection	• The specified device is not fully connected. • Hardware failure.	• Reestablish communication by reattaching the device. • Press **Go** to clear the message. • If a hardware failure, turn the printer off and back on. If the error recurs, turn the printer off, remove the specified device and call for service. If the error cannot be reset, go to **“Map 10 - Unrecoverable “Check Tray (X) or Duplex Connection” Message” on page 2-49**.
Clearing Job Accounting Stat	The printer is deleting all job statistics stored on the hard disk.	Wait for the message to clear.

Message	Meaning	Action
Close Side Door	The printer side door is open.	Close the printer side door. If the error cannot be reset, go to **“Map 1 - False “Side Door Open” Message” on page 2-43**.
Close Top Door	The printer top door is open.	Close the printer top door and front door. If the error cannot be reset go to **“Map 2 - False “Close Top Door” Message” on page 2-43**.
Close Tray <x> Top Cover	The high capacity feeder door is open.	Close the HCPF door and the top cover. If the error cannot be reset, go to **“Map 3 - False “Close Tray (X) Top Cover” Message” on page 2-44**.
Copying	The printer is processing a copy job originating from the OptraImage™ scanner.	Wait for the message to clear.
Defragmenting	The printer is defragmenting the flash memory to reclaim storage space occupied by deleted resources.	Wait for the message to clear. **Warning:** Do not turn the printer off while this message is displayed.
Delete All Jobs	The printer is requesting confirmation to delete all held jobs.	• Press **Go** to continue. The printer deletes all held jobs. • Press **Stop** to cancel the operation.
Deleting Jobs	The printer is deleting one or more held jobs.	Wait for the message to clear.
Disabling Menus	The printer is responding to a request to disable the menus.	Wait for the message to clear. **Note:** While the menus are disabled, you cannot change the printer settings from the operator panel.

Message	Meaning	Action
Disk Corrupted Reformat?	The printer has attempted a disk recovery process and cannot repair the disk.	• Press **Go** to reformat the disk and delete all files currently stored on the disk. • Press **Stop** to clear the message without reformatting the disk.
Disk Recovery x/5 yyy%	The printer is attempting to recover the hard disk.	Wait for the message to clear. **Warning:** Do not turn the printer off while this message is displayed.
Enabling Menus	The printer is responding to a request to make the menus available to all users.	Wait for the message to clear and press **Menu** to view the menus available.
Engine Warming	The printer is warming the fuser assembly.	Wait for the message to clear.
Enter PIN: =_____	The printer is waiting for you to enter your four-digit PIN number.	Use the operator panel buttons to enter the PIN.
Fax <x>	The printer is processing an incoming fax.	Wait for the message to clear.
Flushing Buffer	The printer is flushing corrupted print data and discarding the current print job.	Wait for the message to clear.
Formatting Disk yyy%	The printer is formatting the hard disk. The second line shows percentage complete.	Wait for the message to clear.
Formatting Flash	The printer is formatting flash memory.	Wait for the message to clear.
Fuser Maintenance	The counter that tracks wear on the fuser has reached its limit.	• Press **Go** to continue printing. • If print quality is unacceptable, replace the fuser.

Message	Meaning	Action
Held Jobs May be Lost	The printer memory is too full.	• Press **Go** to clear the message. The printer frees memory by deleting the oldest job and continues deleting jobs until there is enough memory. • Press **Stop** to clear the message without deleting jobs. • Press **Menu** to open the Job Menu and cancel the current job.
Infrared <x>	An infrared interface is the active communication link.	Wait for the message to clear.
Insert Tray <x>	The specified tray is either missing or not fully inserted.	Insert the specified tray. If the error cannot be reset, go to **"Paper Tray Missing Service Check" on page 2-63**.
Install <device> or Cancel Job	The printer is requesting a specified device be installed so it can print.	• Turn the printer off, install the specified device and restart the printer • Press **Menu** to open the Job Menu and cancel the current job.
Invalid Engine Code	The printer engine code has not been programmed or is not valid.	Call for service.
Invalid Network <x> Code	The code in an internal print server is not valid. The printer cannot receive and process jobs until valid code is programmed into the internal print server.	Download valid code to the printer internal print server.

Message	Meaning	Action
Load <x>	The printer is trying to feed paper from a source it detects is empty.	Load paper of the size and type requested in the second line of the display in the specified tray. Press **Menu** to open the Job Menu and cancel the current job. • If Load (Tray) cannot be reset, go to **"Map 4 - False "Tray (X) Low/ Empty" Message" on page 2-45**. • If Load (MPF), check the MPF paper present sensor.
Load Manual	A request for a manual feed job has been sent to the printer. The printer is ready for insertion of a single sheet into the manual feed slot.	• Load a sheet of paper specified in the second line of the display in the manual feed tray or multipurpose feeder. • Press **Select** or **Go** to ignore the manual feed request and print on paper already in the printer. • Press **Menu** to open the Job Menu and cancel the current job.
LocalTalk <X>	A LocalTalk interface is the active communication link.	Wait for the message to clear.
Menus Disabled	The printer menus are disabled.	You can still open the Job Menu to cancel a job that is printing or to select a confidential job or a held job that you want to print.
Network Card Busy	An internal print server is being reset.	Wait for the message to clear.
Network <x>	A network interface is the active communication link.	Wait for the message to clear.

Message	Meaning	Action
Network <x>, <y>	An network interface is the active communication link, where <x> represents the active link and <y> represents the channel.	Wait for the message to clear.
No Jobs Found, Retry?	The PIN number entered is not associated with any confidential job.	• Press **Go** to enter another PIN. • Press **Stop** to clear the PIN entry prompt.
Not Ready	The printer is not ready to receive or process data.	Press **Go** to make the printer ready.
Parallel <x>	A parallel interface is the active communication link.	Wait for the message to clear.
Performing Self Test	The printer is running the series of start-up tests it performs after it is turned on.	Wait for the message to clear.
Power Saver	The printer is ready to receive data. It is reducing electricity consumption while idle.	• Send a job to the printer. • Press **Go** to quickly warm the printer to normal operating temperature and display the **Ready** message.
Print Jobs on Disk	Jobs spooled to the hard disk before the printer was last turned off have not yet printed.	Press **Go** to print the jobs. Press **Return** or **Stop** to delete jobs.
Printer Calibrating	The printer is adjusting the color tables to correct variations caused by environmental conditions.	Wait for the message to clear.
Printing Alignment Page	The printer is processing or printing a test page that shows alignment values.	Wait for the message to clear.
Printing Directory List	The printer is processing or printing a directory of all files stored in flash memory or on a hard disk.	Wait for the message to clear.

Message	Meaning	Action
Printing Font List	The printer is processing or printing a list of all available fonts for the specified printer language.	Wait for the message to clear.
Printing Job Accounting Stat	The printer is processing or printing all job accounting statistics stored on the hard disk.	Wait for the message to clear.
Printing Menu Settings	The printer is processing or printing the menu settings page.	Wait for the message to clear.
Prog Engine Code	The printer is programming new code into flash memory.	Wait for the message to clear.
Prog System Code	The printer is programming new system code.	Wait for the message to clear.
Program Flash	The printer is storing resources, such as fonts or macros, in flash memory.	Wait for the message to clear.
Programming Disk	The printer is storing resources, such as fonts or macros, on hard disk.	Wait for the message to clear.
Programming Error <x>	An error occurred while the printer was programming code into memory.	Correct the problem specified on the second line of the display.
Queuing and Deleting Jobs	The printer is deleting one or more held jobs and sending one or more jobs to print.	Wait for the message to clear.
Queuing Jobs	The printer is sending one or more held jobs to print.	Wait for the message to clear.
Ready	The printer is ready to receive and process print jobs	Send a job to print.

Message	Meaning	Action
Ready Hex	The printer is in Hex Trace mode and is ready to receive and process print jobs	• Send a job to print. All data is printed in hexadecimal. Control strings are printed, not executed. • Turn the printer off and then on to exit Hex Trace mode.
Remove Paper <specified bin>	The specified output bin is full.	Remove the paper from the specified bin(s).
Resetting Maint Cnt Value	The printer is resetting the counter that tracks wear on the fuser.	Wait for the message to clear.
Resetting the Printer	The printer is resetting to the current default settings. Any active print jobs are canceled.	Wait for the message to clear.
Restore Held Jobs. Go/Stop?	The printer has been reset or has been turned on and the printer detects print and hold jobs stored on the hard disk.	Press **Go**. All jobs on hard disk are restored. Press **Return** or **Stop**. No jobs are restored and the printer returns to Ready.
Restoring Factory Defaults	The printer is restoring factory default settings.	Wait for the message to clear.
Restoring Held Jobs	The printer is restoring held jobs from the hard disk.	Wait for the message to clear.
Serial <x>	A serial interface is the active communication link.	Wait for the message to clear.
Std Bin Full	The standard bin is full.	Remove the paper in the bin to clear the message.
Supplies	One of the printer supplies requires attention.	Press **Menu** to open the Supplies Menu and identify which supply item needs replacing.

Message	Meaning	Action
Tray <x> Empty	The specified tray is out of paper.	Load paper in the tray and try to clear the message. If the message cannot be reset, go to **“Map 4 - False “Tray (X) Low/Empty” Message” on page 2-45**.
Tray <x> Low	The specified tray is low of paper.	Add paper in the tray and try to clear the message. If the message cannot be reset, go to **“Map 4 - False “Tray (X) Low/Empty” Message” on page 2-45**.
Tray <x> Missing	The specified tray is either missing or not fully inserted.	Insert the tray completely. If the message cannot be reset, go to **“Paper Tray Missing Service Check” on page 2-63**.
Unsupported Disk	The printer detects an unsupported disk.	• Press **Go** to clear the message. • Format the disk.
USB <x>	The printer is processing data through the specified USB port.	Wait for the message to clear.
Waiting	The printer is waiting for an End of Job command, a Form Feed Command, or additional data.	• Press **Go** to print the contents of the buffer. • Press **Menu** to open the Job Menu and cancel the current job.
1565 Emul Error Load Emul Option	The download emulator version on the firmware card does not match the printer code version.	Download the correct emulator version from Lexmark’s Web site.
2 <xx> Paper Jam	The printer detects a paper jam.	Clear the paper path. If the message cannot be reset, go to the **“Paper Carrying Service Check” on page 2-58**.

Message	Meaning	Action
30 Coating Roll Missing	The oil coating roll is either missing or installed incorrectly.	Correctly install the oil coating roll. If the message cannot be reset, go to **“Map 5 - False “30 Oil Coating Roll Missing” Message” on page 2-46**.
30 <color> Print Unit Missing	One or more of the color print units is either missing or incorrectly installed.	Correctly install the color print unit(s). If the message cannot be reset, go to **“Map 6 - False “<Color> Print Unit Missing” Message” on page 2-46**.
32 Unsupported <color> Cartridge	The printer detects an unsupported toner cartridge.	Replace the cartridge.
33 Tray <x> Config Error	The optional heavy media tray is inserted into any tray location except tray 1.	Remove the heavy media tray from the invalid location.
34 Short Paper	The paper is too short.	• Press **Go** to clear the message. • Make sure the paper size setting in the Paper Menu is correct for the size you are using. • Press **Menu** to open the Job Menu and cancel the current job.
35 Res Save Off Deficient Memory	The printer lacks the memory to enable Resource Save.	• Press **Go** to disable Resource Save and continue printing. • Install additional memory.
37 Insufficient Collation Area	The printer memory does not have the free space necessary to collate the job.	• Press **Go** to print the portion of the job already stored and begin collating the rest of the job. • Press **Menu** to open the Job Menu and cancel the current job.

Message	Meaning	Action
37 Insufficient Defrag Memory	The printer cannot defragment flash memory.	• Delete fonts, macros, and other data in printer memory. • Install additional printer memory.
37 Insufficient Memory	The printer memory is full and cannot continue processing current jobs.	• Press **Go** to clear the message and continue printing. • Press **Stop** to clear the message without deleting print jobs. • Press **Menu** to open the Job Menu and cancel the current job.
38 Memory Full	The printer is processing data, but the memory is full.	• Press **Go** to clear the message and continue printing. • Press **Menu** to open the Job Menu and cancel the current job.
39 Complex Page	The print information on the page is too complex.	• Press **Go** to clear the message and continue printing. • Press **Menu** to open the Job Menu and Cancel the current job.
4 <x> Unsupported Firmware Card	The printer detects an unsupported version of firmware on the installed firmware card.	• Turn the printer off and then press and hold **Go** while turning it on, bypassing the code on the firmware card. • Remove the firmware card.

Message	Meaning	Action
40 Tray <x> Size Sense Error	The high capacity sheet feeder detects an error in the size sensing mechanism.	• Turn off the printer and be sure that all the high capacity feeder connectors are installed properly. • Check the high capacity feeder size sensor and go to **“Map 8 - False “40 Tray (X) Size Sensor Error” Message” on page 2-48**.
41 Open Bin 1 Exit Tray	The printer wants to send paper to the in 1 output tray, but the tray is closed.	• Open bin 1 to clear the message. • Press **Go** to clear the message and continue. If the message cannot be reset, go to **“Map 9 - False “41 Open Bin 1 Exit Tray” Message” on page 2-48**.
51 Defective Flash	The printer detects defective flash memory.	• Press **Go** to clear the message and continue printing. • Install different flash memory before downloading.
52 Flash Full	There is not enough free space in flash memory.	• Press **Go** to clear the message and continue printing. • Delete fonts, macros, and other data stored on flash memory. • Install flash memory with more storage capacity.

Message	Meaning	Action
53 Unformatted Flash	The printer detects unformatted flash memory.	• Press **Go** to clear the message and continue printing. • Format the flash memory. If the error remains, the flash memory may be defective.
54 Serial Option <x> Error	The printer has detected a serial interface error on a serial port.	• Make sure the serial link is set up correctly and you are using the appropriate cable. • Press **Go** to clear the message and continue. • Press **Menu** to open the Job Menu and reset the printer.
54 Network <x> Software Error 54 Standard or Std <x> Software Error	The printer cannot establish communications with an installed network port.	• Press **Go** to clear the message and continue printing. • Program new firmware for the network interface by way of the parallel port. • Press **Menu** to open the Job Menu and reset the printer.
54 Std Par ENA Connection Lost 54 Par <x> ENA Connection Lost	The printer has lost the connection to an external print server.	• Make sure the cable connecting the ENA and the printer is securely attached. Turn the printer off and then on to reset. • Press **Go** to clear the message and continue printing.
56 Serial Port <x> Disabled	Data has been sent to the printer through a disabled serial port.	• Press **Go** to clear the message. • Make sure the Serial Buffer menu item in the Serial Menu is set to Disabled.

Message	Meaning	Action
56 Parallel Port <x> Disabled 56 Std Parallel Port Disabled	Data has been sent to the printer through a disabled parallel port.	• Press **Go** to clear the message. • Make sure the Parallel Buffer menu item in the Parallel Menu is set to Disabled.
56 USB Port <x> Disabled 56 Std USB Port Disabled	Data has been sent to the printer through a disabled USB port.	• Press **Go** to clear the message. • Make sure the USB Buffer menu item in the USB Menu is set to Disabled.
58 Too Many Bins Attached	Too many output bins are installed. Unsupported output bins are installed.	Turn off and unplug the printer. Remove or reconfigure the output bins. Plug the printer in and turn it on.
58 Too Many Disks Installed	Too many disks are installed.	Turn off and unplug the printer. Remove the excess hard disks. Plug the printer in and turn it on.
58 Too Many Flash Options	Too many flash options are installed.	Turn off and unplug the printer. Remove the excess flash options. Plug the printer in and turn it on.
58 Too Many Trays Attached	Too many trays are installed.	Turn off and unplug the printer. Remove the excess trays. Plug the printer in and turn it on.
61 Defective Disk	The printer detects a defective hard disk.	• Press **Go** to clear the message and continue printing. • Install a different hard disk before you perform any operations that require one.

Message	Meaning	Action
62 Disk Full	Insufficient memory on the hard disk.	• Press **Go** to clear the message and continue printing. • Delete fonts, macros, and other data stored on the hard disk.
63 Unformatted Disk	The printer detects an unformatted hard disk.	• Press **Go** to clear the message and continue printing. • Format the disk before performing disk operations. • Replace the hard disk.
64 Unsupported Disk Format	The printer detects an unsupported disk format.	• Press **Go** to clear the message. • Format the disk.
80 Belt Exhausted	The transfer belt has reached end of life.	Replace the transfer belt.
80 Belt/Fuser Exhausted	The transfer belt and fuser have reached end of life.	Replace the transfer belt and fuser.
80 Belt/Fuser Life Warning	The transfer belt and fuser are nearing end of life.	Press **Go** to clear the message and continue printing. The supplies message is displayed until you replace the transfer belt and fuser.
80 Belt Life Warning	The transfer belt is nearing end of life.	Press **Go** to clear the message and continue printing. The supplies message is displayed until you replace the transfer belt and fuser.
80 Fuser Exhausted	The fuser has reached end of life.	Replace the fuser.
80 Fuser Life Warning	The fuser is nearing end of life.	Press **Go** to clear the message and continue printing. The supplies message is displayed until you replace the transfer belt and fuser.

Message	Meaning	Action
81 Engine Code CRC Failure	Microcode in the engine flash code module has failed a system check.	Press **Go** to clear the message and discard the code. Retransmit the microcode data from the host computer.
84 All Photo Devs Exhausted	All of the photodevelopers have reached end of life.	Replace all of the photodevelopers. Make sure you also install the new fuser coating roll that is included in each photodeveloper kit.
84 Black Photo Dev Abnormal	The printer has detected an abnormal black photodeveloper.	Install a new black photodeveloper to clear the message and continue printing.
84 Black Photo Dev Exhausted	The black photodeveloper has reached end of life.	Replace the black photodeveloper. Make sure you also install the new fuser coating roll that is included in the kit. If print quality is still acceptable and you do not want to replace the photodeveloper, press **Go** to clear the message and continue printing.
84 Black Photo Dev Life Warning	The black photodeveloper is nearing end of life.	Press **Go** to clear the message and continue printing. The supplies message is displayed until you replace the photodeveloper.
84 Color Photo Dev Abnormal	The printer has detected an abnormal color photodeveloper.	Install a new color photodeveloper to clear the message and continue printing.

Message	Meaning	Action
84 Color Photo Devs Exhausted	The color photodevelopers have reached end of life.	Replace the color photodevelopers (Cyan, Magenta and Yellow) at the same time. If print quality is still acceptable and you do not want to replace the photodevelopers, press **Go** to clear the message and continue printing.
84 Color Photo Dev Life Warning	The color photodevelopers are nearing end of life.	Press **Go** to clear the message and continue printing. The supplies message is displayed until you replace the photodevelopers.
88 Black Toner Empty 85 Toner Empty Coating Roll Exhausted	The black toner cartridge is empty. See note below The oil coating roll has reached end of life.	Replace the oil coating roll. and black toner cartridge.
Note: If the customer has replaced the black toner cartridge before this message displays, the oil coating roller message will not display until the cartridge is empty.		

Message	Meaning	Action
88 <color> Toner Empty	The printer has ceased operating because the specified toner cartridge is empty.	Install a new toner cartridge and go to **“Map 7 - False “88 <Color> Toner Low/Toner Empty” Message” on page 2-47**.
88 <color> Toner Low	The printer has detected that the specified toner cartridge is low.	• Replace the specified toner cartridge. • Press **Go** to clear the message and continue printing. The supplies message is displayed until you replace the specified toner cartridge. Go to **“Map 7 - False “88 <Color> Toner Low/ Toner Empty” Message” on page 2-47**.

Maintenance Analysis Procedures (MAPS)

Map 1 - False “Side Door Open” Message

Step	Questions / Actions	Yes	No
1	Close the side (turn guide) door. Does the message reset?	Problem solved.	Go to step 2.
2	Disconnect CN30 from the printer controller board. While activating the door switch, is there continuity at pins 1 and 2 of the connector?	Replace the printer controller board.	Replace the side door (turn guide) sensor assembly.

Map 2 - False “Close Top Door” Message

Step	Questions / Actions	Yes	No
1	Close the top unit and front cover. Does the message reset?	Problem solved.	Go to step 2.
2	Is the interlock switch actuator broken?	Replace the front door.	Go to step 3.
3	Is the actuator rod that activates the interlock switch on power supply 2 damaged or broken?	Replace the actuator rod.	Replace the power supply 2.

Map 3 - False “Close Tray (X) Top Cover” Message

Step	Questions / Actions	Yes	No
1	Remove the rear cover on the high capacity paper feeder and observe LED 9 on the HCPF card while actuating the cover open micro-switch. Does the LED go on and off, while opening and closing the door?	Replace the HCPF card.	Replace the cover open micro-switch.

Map 4 - False “Tray (X) Low/Empty” Message

Step	Questions / Actions	Yes	No
1	Is the “Tray X Low” message present?	Go to step 2.	Go to step 5.
2	Is the paper remaining actuator inside the cassette drawer binding, or operating incorrectly?	Go to step 3.	Repair or replace parts as necessary.
3	Are connectors CN35 and CN36 on the printer controller board, and CN10 on the expansion feeder control card associated with the failing tray properly connected?	Go to step 4.	Properly connect the connectors.
4	Replace the paper remaining sensor board for the problem tray. Does this fix the problem?	Problem solved.	Replace the expansion feeder control card.
5	Is the paper present flag operating correctly?	Go to step 6.	Repair or replace the failing parts.
6	Are connectors CN35 and CN36 on the printer controller board, and CN6 on the expansion feeder control card associated with the failing tray properly connected?	Go to step 7.	Properly connect the connectors.
7	Replace the paper present sensor. Does this fix the problem?	Problem solved.	Replace the associated expansion feeder control card.

Map 5 - False “30 Oil Coating Roll Missing” Message

Step	Questions / Actions	Yes	No
1	Is the OCR properly installed?	Go to step 2.	Properly install the OCR.
2	Is the OCR contact at the rear of the fuser damaged or broken?	Replace the fuser.	Go to step 3.
3	Is CN44 on the printer controller board properly connected?	Replace the printer controller board.	Properly connect CN44.

Map 6 - False “<Color> Print Unit Missing” Message

Step	Questions / Actions	Yes	No
1	Insure that all connectors that the print unit photodeveloper contacts when the top cover is closed are operating correctly and are not damaged, worn, or missing. Are the connectors operating properly with no damage or wear?	Go to step 2.	Replace the sub frame.
2	Is CN42 on the printer controller board properly connected?	Replace the printhead controller.	Properly connect CN42.

Map 7 - False “88 <Color> Toner Low/Toner Empty” Message

Step	Questions / Actions	Yes	No
1	Ensure that the encoder located at the rear of the toner set is clean and free of dirt or paper dust. Is the encoder wheel clean and free of dirt or paper dust?	Go to step 2.	Clean the encoder wheel or replace the toner set.
2	Is the toner remaining photo interrupter sensor clean and free of obstructions?	Go to step 3.	Clean or replace the toner remaining photo interrupter.
3	Is the connector of the problem color properly connected on the printer controller board? Magenta - CN18 Yellow - CN21 Cyan - CN19 Black - CN22	Replace the printer controller board.	Properly connect the connector.

Map 8 - False “40 Tray (X) Size Sensor Error” Message

Step	Questions / Actions	Yes	No
1	On the high capacity paper feeder, are the paper size adjusting screws present on the upper portion of the side fence and fully screwed into the adjusting bracket?	Go to step 2.	Replace the missing thumbscrew or screw them in all the way.
2	Observe the LEDs 1 and 2 on the HCPF control board while unscrewing the paper size adjusting thumbscrews. Do the LEDs light when the screws are loosened all the way?	Replace the HCPF control board.	Replace the affected sensor. Paper size sensor 1 for 11” or paper size 2 for A4.

Map 9 - False “41 Open Bin 1 Exit Tray” Message

Step	Questions / Actions	Yes	No
1	Is the exit tray switch actuator broken or damaged?	Replace the paper exit tray.	Go to step 2.
2	Disconnect CN31 from the printer controller board. When activating the paper exit tray switch, is there continuity between pins 1 and 2?	Replace the printer controller board.	Replace the paper exit tray switch.

Map 10 - Unrecoverable “Check Tray (X) or Duplex Connection” Message

Step	Questions / Actions	Yes	No
1	Is the problem with a specific paper tray or the duplex unit?	Go to step 2.	Go to step 8.
2	Is the problem with tray 1?	Go to step 3.	Go to step 6.
3	Are connectors CN 35 and CN36 on the printer controller board properly connected?	Go to step 4.	Properly connect the connectors.
4	Are connectors CN3 and CN1 on the expansion paper feed control card, for tray 1, properly connected?	Go to step 5.	Properly connect the connectors.
5	Replace the tray 1 expansion feeder control card. Does this fix the problem?	Problem solved.	Return the tray 1 expansion feeder control card and replace the printer controller board. If the problem remains, replace the expansion feeder cable assembly.
6	Are connectors CN9, CN8, CN7 and CN3 on the expansion feeder control card (for the problem tray and the trays above and below) properly connected?	Go to step 7.	Properly connect the connectors.

Step	Questions / Actions	Yes	No
7	Exchange the expansion feeder control board for the problem tray with one above or below. Does the symptom follow the exchanged card?	Replace the defective expansion feeder control card.	Replace the upper and lower expansion paper feed drawer connecting cable assemblies.
8	Are any of the pins or contacts on the duplex drawer connectors bent or damaged?	Go to step 9.	Repair or replace the connector.
9	Are connectors CN101 and CN102 on the duplex interface card properly connected?	Go to step 10.	Properly connect the connectors.
10	Replace the duplex interface card. Does this fix the problem?	Problem solved.	Return the duplex interface card and go to step 11.
11	Replace the duplex interface cable. Does this fix the problem?	Problem solved.	Go to step 12.
12	Are CN37 and CN38 on the printer controller board properly connected?	Replace the printer controller board. If the problem remains, replace the duplex connector cable.	Properly connect the connectors.

Map 11 - Paper Size Map

Step	Questions / Actions	Yes	No
1	Do the paper size sensor actuators on the paper operation tray operate correctly, as you slide the paper location plate?	Go to step 2.	Replace parts as necessary.
2	Do the size sensor levers operate correctly?	Go to step 3.	Replace the size sensor levers.
3	Are the following connectors properly connected: CN2 (tray 1) on the printer controller board. CN4 on the expansion feeder control card (trays 2-5).	Go to step 4.	Properly connect the connectors.
4	Replace the paper size sensor card. Does this fix the problem?	Problem solved.	Replace the printer controller board (tray 1.) Replace the expansion feeder control card (trays 2-5).

Symptom Table

Symptom	Action
You cannot print color.	Make sure the Color Correction menu item is not set to Black & White. Make sure the color print units are completely installed in the printer. Go to the **“Transfer Belt Up/Down Service Check” on page 2-68**.
Transparencies curl excessively.	Make sure you’re using the recommended Lexmark transparencies. Also be sure the paper delivery is set to the rear exit.
The printer seems slow to print.	If you set the Paper Type to Transparency or Card Stock, the printer increases the fuser temperature and slows printing to improve the print quality. After printing on these media, the printer requires additional time to cool the fuser after you select another Paper Type setting (such as Plain Paper or Letterhead). If Printer Usage is set to Maximum Yield, the printer must adjust the photodevelopers as it prepares to print a color page after printing a mono page. The printer performs this same calibration each time you turn the printer on and each time you open and close the top cover. Depending on the types of jobs you print, these adjustments may significantly slow print time.
You cannot remove paper jammed in the fuser.	Open the fuser rollers by operating the fuser pressure relief lever. If you cannot remove the jam, replace the fuser.
You cannot clear the paper jam message.	To clear the paper jam messages, you must remove all paper from the printer’s paper path. Check both inside the printer as well as the paper source you were using. Open and close the front cover and press **Go**. If the message does not clear, go to **“Paper Carrying Service Check” on page 2-58**.
Paper jam in pick-up assembly.	Go to the **“Paper Carrying Service Check” on page 2-58**.

Symptom	Action
Fuser failure.	Go to the **“920 - Fuser Error - Fuser Heater Trouble” on page 2-7**.
No paper pick-up from multipurpose tray.	Go to the **“Paper Carrying Service Check” on page 2-58**.
No paper pick-up from upper or lower cassettes.	Go to the **“Paper Carrying Service Check” on page 2-58**.
Registration roller does not rotate.	Go to the **“Paper Carrying Service Check” on page 2-58**.
Operator panel does not operate properly.	Go to the Diagnostic Aids chapter and run the LCD and Button tests. If the tests fail, replace the operator panel. If you still have a problem, replace the RIP controller board. If your machine beeps 5 times and the screen is blank or all diamonds, replace the operator panel.
• Foggy print • Black pages • Blank print • White spots • Poor reproduction • Incorrect color image registration • Dirt on back of paper • Low image density • White and black lines and bands	Go to **“Print Quality Problems” on page 2-69**.

Symptom	Action
Evenly spaced marks on the paper, or a single mark in the same place on every page.	Go to the **“Marks on Paper Service Check” on page 2-66**.
Poor fusing.	Go to the **“920 - Fuser Error - Fuser Heater Trouble” on page 2-7**.
Toner scatter on front or back of paper.	Check the following: • Excessive toner buildup on the transfer belt. Clean off the toner and run a test print. • Transfer belt assembly • Transfer belt toner waste bottle • Transfer belt separation fingers • Fuser separation pawl
Paper will not feed from MPF.	Be sure you have paper in the MPF. Be sure the MPF paper present sensor connector (CN11) is connected to the printer controller board. If the paper still does not feed, go to the **“Paper Carrying Service Check” on page 2-58**.

Service Checks

Drive 1 DC Motor Service Check

	FRU	Action
1	• DC Motor • Drive Unit 1 • Printer Controller Board	If the motor does not attempt to turn and you receive a 910 error code, replace the driver 1 dc motor. Be sure the toner and photodeveloper units are not causing an overload on the dc motor. If the motor turns but the paper carrying section of the machine does not rotate, check the drive 1 unit gear train for damage. Be sure the clutch on the gear train engages for color printing. Replace the drive 1 unit if necessary. If this does not correct the problem, replace the printer controller board.

Drive 2 Stepper Motor Service Check

	FRU	Action
1	Drive 2 Stepper Motor	Be sure connector CN4 on the printer controller board is firmly connected. If there still is a problem, replace the drive 2 stepper motor.

Duplex Service Check

	FRU	Action
1	Feed Roller Belts	Check for wear or damage to the feed roller belts. Replace as necessary.
2	• Duplex Stepper Motor • Side Fence • Stepper Motor Gears	Be sure the stepper motor turns freely with no binding. Check for wear or damage to the associated gears.
3	• Feed Roller Solenoid Assembly • Paper Re-feed Solenoid Assembly	Check for proper operation of the solenoid and linkage. Replace as necessary.
4	Photo-interrupter Assembly	Ensure that the photo-interrupter actuators are operating correctly and are in the proper position.

Expansion Paper Feed Service Check

If you have a “200 Paper Jam Tray (X)” error code, check the option connection cable for proper connection to the printer or other paper feeder.

	FRU	Action
1	Feeder Drive Motor	If the feeder drive motor works, go to the **“Paper Carrying Service Check” on page 2-58**.
2	• Gears • Feeder Solenoid • Paper Feed Clutch • Expansion Feeder Control Board	If the motor turns but the drive gears do not, replace the gears as necessary. Check the feeder solenoid and paper feed clutch for proper operation, and replace as necessary. If this does not correct the problem, replace the expansion feeder control board.

Face-Down Stacker Full Service Check

	FRU	Action
1	Stacker Full Detection Lever	Check the stacker full detection lever for damage.
2	• Stacker Full Detection Sensor • Printer Controller Board	Check for a voltage fluctuation between 0 V and +5 V between pins 2 and 3 of connector CN9 on the printer controller board while actuating the sensor.

High Capacity Paper Feed (HCPF) Service Check

	FRU	Action
1	• Paper Size Sensors 1 & 2 • Residual Paper Sensors 1 - 4 • Paper Level Sensor • Lower Limit Switch • Docking Switch • Upper Limit • Paper Sensor Switch • Paper Sensor Switch • Paper Feed Sensor	Go to the **“High Capacity Paper Feed Sensor / Switch Test” on page 1-35**, and perform the LED sensor test. You can block each sensor to verify if it is working properly. Replace the failing sensor.
2	• Tray Motor • Paper Feed Motor • HCPF Power Supply • Pickup Solenoid • Paperfeed Roller • Transfer Roller • Paper Feed Clutch • Tray Drive Belt	Be sure that all rollers, gears and belts are in good working order. Replace as necessary.
3	• Paper Feed Clutch • Pickup Solenoid • HCPF Power Supply • Paper Feed Motor • Tray Motor • HCPF Board	Go to the **“Maintenance Mode” on page 1-33** and run the tests.

Operator Panel Service Check

When you replace the PC drum unit, all three color units must be replaced at the same time.

	FRU	Action
1	• Operator Panel • Operator Panel Cable • RIP Board	Run both the LCD Hardware Test and the Button Test in Diagnostic Mode. Be sure the operator panel cable connections are securely connected on the RIP board and operator panel.

Paper Carrying Service Check

Paper has not exited or is stopped in the high capacity paper feeder (Area F, 249).

	FRU	Action
1	• Paper Feed Roller • Transfer Roller	Be sure the paper feed roller and transfer roller, reverse roller and call roller are free of dirt and are not damaged. Clean or replace parts as necessary.
2	• Paper Feed Clutch • Paper Feed Motor • Sensors	Set up and run a test in Maintenance Mode and go to the **“High Capacity Paper Feed (HCPF) Service Check” on page 2-57**. Ensure all motors, clutches, and sensors operate correctly.
3	• HCPF Control Card • HCPF Power Supply	Set up and run a test in Maintenance Mode and go to the **“High Capacity Paper Feed (HCPF) Service Check” on page 2-57**. If no LEDs light, check the power source. Replace the HCPF control card. Replace the HCPF power supply.

Paper is being picked up and carried to the registration roller (Areas C, E, 240, 24x).

	FRU	Action
1	• Paper Size Guide • Side Location Plates	Be sure the paper cassette has the size guides and the side locator locks are working properly. Replace parts as necessary.
2	• Paper Feed Roller (MPF) • Paper Feed Rolls MPF Tray 1, 2, 3, 4, 5 • Carrying Roller Tray 1, 2, 3, 4, 5 • Fanning Pad (MPF)	Be sure the paper feed rollers are free of dirt and not damaged. Be sure the fanning pad is free of dirt and not damaged. Replace parts as necessary.
3	Gears	Be sure the paper feed gears are not damaged.
4	• Paper Feed Solenoid • Paper Feed Clutch • MPF Clutch	Be sure the paper feed solenoid activates the paper feed clutch and the clutch engages properly. Check the failing paper feed solenoid for continuity. Also check connector CN24 (tray1) and CN16 (MPF) on the printer controller board and CN5 on the expansion feeder control card.
5	• Registration Sensor • MPF Sensor • Printer Controller Board	Check for a fluctuation between 0 and +5 V on the printer controller board between the following pins, when actuating the sensor: • Registration sensor - CN11 (pins 1 and 2) • MPF sensor - (CN11 pins 4 and 5) If the voltage fluctuates as stated above, replace the printer controller board. If the voltage does not fluctuate, replace the sensor.

Paper has stopped at the registration roller or has not reached the fuser (Areas C, E, 240, 24x).

	FRU	Action
1	• Registration Roller Clutch • Registration Roller • Transfer Belt Unit • Rear Paper Feed Guide	Check these parts for wear or damage. Replace as necessary. Be sure all guide surfaces in the paper path are free of dirt. Check the registration roller clutch for continuity. Be sure connector CN13 on the printer controller board is connected properly.
2	• Registration Sensor • Printer Controller Board	Check for a fluctuation of between 0V and +5 V between pins 1 and 2 of connector CN11 on the printer controller board while actuating the sensor. If the voltage fluctuates as stated above, replace the printer controller board. If the voltage does not fluctuate, replace the sensor.

Paper has exited the registration roller and entered the fuser (Areas A and B).

	FRU	Action
1	• Transfer Belt Unit • Rear Paper Guide • Discharge Brush • Fuser	Remove any buildup of toner. Replace any damaged or worn parts. Check the paper exit flag on the fuser for damage. Replace the fuser if necessary.
2	Fuser Separation Pawl	Replace the fuser if paper jams cannot be removed.

5055-01x

Paper has entered the fuser and exited the printer (Area B).

	FRU	Action
1	Fuser	Remove any toner buildup and replace any worn or damaged parts.
2	• Fuser Exit Lower Roller • Exit Guide • FU/FD Flap Solenoid • Exit Flap Clutch Lever • Gears • Fuser Exit Upper Roller	Be sure the exit FU/FD solenoid energizes in the correct position for either face-down or face-up delivery. Replace any damaged or worn parts. Do a continuity check of the solenoid. Be sure connector CN122 is properly connected to the printer controller board.
3	• Paper Exit Motor (Drive 2 Stepper Motor) • Face-Down Feed Roller Belt	Be sure that connector CN4 is properly connected to the controller board.
4	• Paper Exit Switch • face-up/face-down Sensor	Check for a fluctuation of between 0V and +5 V on the printer controller board between the following pins, when actuating the sensor: • Paper exit switch - CN12 (pins 4 and 5) • face-up/face-down sensor - (CN12 pins 1and 2) If the voltage does not fluctuate, replace the sensor.

Paper has entered the duplex unit (Area D).

	FRU	Action
1	Feed Rollers Belts	Check for wear or damage to feed rollers and belts.
2	Duplex Unit	Be sure the duplex unit is properly installed and that all connections are correct.
3	• Duplex Stopper Motor • Side Fence Stepper Motor	Be sure the stepper motor turns freely with no binding. Check for wear or damage to the associated gears. Replace as necessary.
4	• Feed Roller Solenoid Assembly • Paper Re-feed Solenoid Assembly	Check for proper operation of the solenoid and linkage. Replace as necessary.

Paper Exit, FU/FD Service Check

	FRU	Action
1	FU/FD Sensor Actuator	If the paper is not exiting to the back paper face-up tray or the face-down tray, check the sensor for proper operation by checking for Check for a fluctuation of between 0V and +5 V between pins 1 and 2 of connector CN12, while actuating the sensor.
2	FU/FD Deflector	Check the FU/FD deflector that directs the paper to the proper tray. Replace if necessary.
3	FU/FD Solenoid	Check the FU/FD solenoid for continuity. Also be sure the connector is properly connected to the printer controller board.
4	Face-Up Exit Assembly	Check the gears and the actuating mechanism for wear or damage. Replace as necessary.
5	Printer Controller Board	Check connectors CN2 and CN14 for proper connection on the printer controller board.

Paper Tray Missing Service Check

	FRU	Action
1	Actuator Sensor	Check the paper remaining sensor actuator for damage. Check the paper remaining sensor for dust, dirt or damage. Repair or replace as necessary.
2	Printer Controller Board Expansion Paper Feeder Control Board	Be sure CN35 and CN36 on the printer controller board are connected properly, or CN10 on the expansion paper feeder control board for the associated tray.

Photodeveloper Missing Service Check

When you replace the photodeveloper unit, all three color units must be replaced at the same time.

	FRU	Action
1	Photodeveloper	Check for dirt or damage to the sensing contacts on rear. Clean or replace the photodeveloper drum unit if necessary.
2	Sub-frame Unit	Check the sensing contacts on the sub-frame assembly. Clean or replace the affected contacts or sub-frame.
3	High Voltage Unit	If the problem remains, replace the high voltage unit (HVU).
4	Printer Controller Board	If the problem remains, replace the printer controller board.

Power Supply Service Check

	FRU	Action
1	Voltage	Be sure the switch is on and the power cord is firmly plugged into the printer. Be sure the correct voltage is present at the outlet.
2	Power Cord	Check the power cord for continuity.
3	• Fuse • Switch • Power Supply 1	The power supply fuses may be blown. Unplug the machine and check fuse F2 on the power supply 1 for continuity. If the fuse is good, check the power switch connector for continuity.
4	Power Supply 2	The power supply 2 may be defective. Check the dc power of the power supply for the following pins: CN102 pins 8 and 11 for +3.3 V CN103 pins 7 and 14 for +3.3 V CN105 pin 5 +3.3 V CN102 pins 12 and 14 for +5 V CN103 pins 1, 3, 8, 9 for +5 V CN104 pins 1 and 2 for +5 V CN104 pins 7 and 8 for +24 V CN105 pin 4 for +24 V CN106 pins 5 and 6 for +24 V Replace power supply 2 if necessary.

Marks on Paper Service Check

If you have evenly spaced marks on the paper, measure the distance between the marks and locate the symptom below. Check the assembly for dirt or damage and clean as necessary. Run a test print to verify the problem has been corrected. The indicated assemblies are replaced by the customer at prescribed intervals.

If you remove the transfer belt, do not turn it upside down. Toner will fall from the waste toner box onto the transfer sheets and roller(s) inside the belt. This causes lower transfer efficiency and washed out colors.

Distance between marks	FRU / SUPPLY ITEM
27 mm	Absorption/Charge Roller
139.2 mm	Fuser Upper Roller
140 mm	Fuser Lower Roller
824.5 mm	Transfer Belt
46.9 mm	Upper Registration Roller
46.9 mm	Lower Registration Roller
45.1 mm	Supply Roller (cartridge)
58.8 mm	Developer Roller (cartridge)
94.2 mm	Photodeveloper Drum

Fuser Part Locations	mm From Paper Center
Thermistor Hot Roll	-6
Thermistor BUR	0
TCO Hot Roll	66
TCO BUR	101
Detact Fingers Hot Roll	113.5/75/37.5/0/-37.5/-75/-113.5
Detact Fingers BUR	134/90/45/0/-45/-90/-134
Exit Rollers	96/37.5/-37.5/-96
Star Rollers	127/60/15/-15/-60/-127

Transfer Belt Up/Down Service Check

	FRU	Action
1	Belt Up/Down Sensors Belt Up/Down Actuator	Check the transfer belt up/down sensor. Be sure that connector CN29 is firmly connected to the printer controller board. Replace the sensor or the actuator if necessary. Check for a fluctuation between 0V and +5 V between pins 8 and 10, while actuating the sensor.
2	Belt Up/Down Clutch	Be sure connector CN26 is firmly connected to the printer controller board. Replace the belt up/down unit if necessary.
3	Belt Up/Down Lift Cams	Check and replace the belt up/down lift cam shaft if necessary.
4	Printer Controller Board	If there still is a problem, replace the printer controller board.

Image Quality Troubleshooting

Print Quality Problems

Problem	Action
Print is too light, or printed images or characters have voids or dropouts. 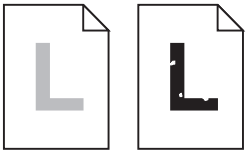	Be sure you're using recommended paper or other media. Use media from a new package.
	Be sure you have selected the correct Paper Weight setting for the media you're using.
	Be sure the affected print unit is completely installed in the printer.
	Set print darkness to 4 from the Color Menu.
	Clean the printhead LEDs.
	If you suspect a toner cartridge is low on toner, remove the appropriate toner cartridge and gently shake it back and forth to distribute the toner evenly. Reinsert the print unit and try printing the job again.
	Replace the affected toner cartridge.
	Replace the photodevelopers. If only black print appears light, replace just the black photoconductor. If one of the colors prints too light, replace all three of the color photodevelopers. If there is still a problem, go to **"Uneven Printing" on page 2-76**.

Problem	Action
Colored lines, streaks, or smudges appear on the printed page, or print appears blurred or unclear. 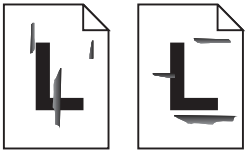	Replace the photodevelopers. If the problem only occurs when printing black, you can replace just the black photoconductor and fuser coating roll. If the problem occurs when printing one of the colors, replace all three of the color photodevelopers. If the problem remains, go to **“Black Line” on page 2-74**.
Toner specks appear on the page. 	Replace the oil coating roll.
Toner colors the background of the page. 	Be sure the affected photodevelopers are completely installed in the printer.
The page has 100% coverage of one color. 	Be sure the affected photodevelopers are completely installed in the printer.
	Replace the photodevelopers. If the page is black, replace just the black photoconductor. If the page is another color, replace all three of the color photodevelopers. If this does not fix the problem, go to **“Black Print” on page 2-74**.

Problem	Action
Light lines or streaks appear on the printed page. 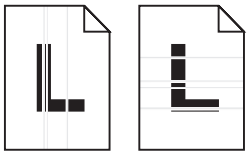	Clean the LEDs.
	Make sure the affected photodeveloper is completely installed in the printer.
	Remove the affected photodeveloper and gently shake it back and forth to distribute the toner evenly. Reinsert the print unit and try printing the job again.
	Replace the affected toner cartridge.
	Replace the photodevelopers. If the problem only occurs when printing black, replace just the black photoconductor. If the problem occurs when printing one of the colors, replace all three of the color photodevelopers and the transfer belt. If there still is a, go to **“Uneven Printing” on page 2-76**.
The page is blank. 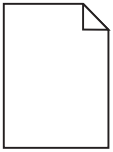	Be sure the affected print unit is completely installed in the printer.
	Replace the affected toner cartridge. If there still is a, go to **“No Image” on page 2-73**.
Toner smears or rubs off the page. 	Be sure you’re using recommended paper or media.
	Be sure you have selected the correct Paper Weight setting for the media you’re using.
	Be sure the top cover is completely closed and both sides are snapped shut.
	You may need to replace the fuser.

Problem	Action
Toner adheres to the back of the page. 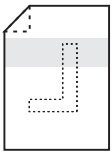	Remove the fuser oil roll and wipe it with a dry, lint-free cloth, and clean the transfer belt. If there still is a problem, go to **“Periodic Dirt” on page 2-76**.
Quality of printed transparencies is inadequate. 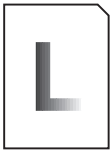	Be sure you’re using the recommended Lexmark transparencies.
	Be sure you’re loading transparencies properly.
	When printing transparencies, always set the Paper Type to Transparency.
	Avoid getting fingerprints on transparencies before printing.
Print on the page is skewed. 	Be sure the width guides in the paper tray or the multipurpose feeder fit snugly against the media you loaded.
	Be sure the paper you load fits under the two corner tabs at the front of the tray.
A white gap is noticeable between color fills, due to poor color registration. 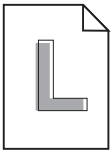	Be sure all four corners of the printer are resting on a level surface.
	Turn the printer off and back on. The printer calibrates the photodevelopers and drive gears, which may improve registration. Be sure that Auto Registration, in the Service Menu, is **On**.

No Image

Possible Cause	Action
Moist Paper	Be sure the printer is not in a damp environment and the paper is not curled or wavy due to moisture. If necessary inform the customer about correct storage.
LED Printhead	Be sure the LED printhead cable is securely connected to the printhead controller board and LED printhead assembly. If the problem remains, replace the LED printhead.
High Voltage Unit (HVU)	Be sure all the connectors to the high voltage unit are securely connected. If the problem remains, replace the high voltage unit.
Printer Controller Board	Be sure all connectors are securely connected to the printer controller board. If the problem remains, replace the printer controller board.
Printhead Controller Board	If the problem remains, replace the printhead controller board.

Black Line

Possible Cause	Action
Photodeveloper Drum	Clean any dirt from the drum surface. Replace it if it is scratched.
Fuser Detach Pawl Fuser Roller Surface Fuser Thermistor Surface	Remove any toner buildup. Replace the fuser.
LED Printhead	Clean the LED printhead. Print a blank document. Replace the LED printhead if a black line appears on the paper.

Black Print

Possible Cause	Action
High Voltage Unit (HVU)	The printed paper has black print. Be sure the high voltage unit is properly connected. If the problem remains, replace the high voltage unit.
Sub-frame	If the problem remains, replace the right sub-frame contacts.
Photodeveloper Drum Set	If the problem remains after replacing the sub-frame, be sure the drum has clean contacts. If necessary, replace the drum set.

Missing Colors

Possible Cause	Action
Toner Cartridge Unit	Be sure the toner cartridge and the PC drum unit are properly seated. Be sure the contacts on the print unit are clean. Be sure the print unit is installed in the correct position. Run a print test. If the problem remains, switch the print unit with another color and run a test print. If the new color prints, replace the failing toner cartridge.
High Voltage Unit	If the problem remains, check the connector on the high voltage unit. Replace the high voltage unit If the problem remains.
LED Printhead Unit	Replace the printhead and EPROM If the problem remains.
LED Printhead Controller Board	If the problem remains, replace the printhead controller board.
High Voltage Unit (HVU)	If the problem remains, replace the high voltage unit.
Transfer Belt Unit	If the problem remains, replace the transfer belt unit.

Uneven Printing

Possible Cause	Action
Photoconductor Drum	Check for condensation or dirt on the photoconductor drum.
LED Printhead	Clean any dirt off the exposed surface of the LED printhead. Also check the locating pins of the printhead.
Transfer Belt Unit	Be sure the transfer belt is clean and not damaged. Replace parts as necessary.
Top Cover	Be sure the top cover is fully locked.

Periodic Dirt

Possible Cause	Action
Fuser Heat Roll Fuser Press Roll Fuser Oil Roll	Check for dirt or damage to the fuser heat, the fuser press roll, or the fuser oil roll.
Photoconductor Drum	Check for scratches on the surface and replace if necessary.

White Spots

Possible Cause	Action
LED Printhead Photodeveloper Toner Cartridge	Firmly install the PC drum unit into the toner cartridge and the print unit into the printer.
Belt Unit	Check the belt unit for scratches or nicks. Be sure there is no toner buildup on the belt. Replace the belt unit if it is damaged.

Options Service Check

Service Tip: When you have a problem with any of the options installed in the options slots on the interconnect board, switch the non operating option to one of the other option slots to isolate the failure.

Serial Port Service Check

Run the **“Serial Wrap Tests” on page 3-15**.

Note: The Serial Wrap Test is designed to check the serial port hardware by using a wrap plug (P/N 1329048) and invoking the Serial Post Diagnostic Test. The test helps isolate the printer from the serial cable and host. The test provides failure information on the display for approximately three seconds. If the test indicates a problem, replace the RIP board.

Flash Memory Option(s)

Run a copy of the test page and check to see if the option you are checking is listed. The printer does not recognize the option being installed if the option is not listed. Be sure the memory card assembly is installed correctly and is not broken or damaged. If the Memory card assembly is correctly installed not broken or damaged then run the **“Flash Test” on page 3-19**. If the test fails, replace the Flash card assembly. If the problem continues, replace the RIP board.

DRAM Memory Option(s)

This service check is the same as the flash memory option service check with the following exception:

Run the **“DRAM Memory Test” on page 3-11** from the menu if the DRAM Memory card assembly is correctly installed and not broken or damaged. If the test fails, replace the DRAM card assembly. If the problem continues, replace the RIP board.

Hard Disk Option

Service Tip: The 5055-01x printers support one hard disk option. Be sure only one 3.2 GB or larger one hard disk option is installed. Be sure the fixed disk and the fixed disk board are correctly installed. Run the **"Quick Disk Test" on page 3-17** from the Device Test on the Diagnostic Menu when a problem is suspected either with the hard disk system board or with the hard disk.

Note: The Quick Disk Test is a non-destructive test and indicates Pass or Fail. If the test fails, replace the hard disk. If a problem still exists, replace the hard disk board.

Use the **"Disk Test/Clean" on page 3-18** to help restore the disk if it contains bad data and is unusable. This test is divided into a cleaning and a verifying or testing section.

WARNING: This can be a very lengthy test depending on the disk size. This test leaves the hard disk unformatted. The servicer or user must reformat the disk using the Format Disk Menu operation. This is a destructive type of test. All the data on the disk is destroyed and should not be performed on a known good disk.

Network Card Option

Note: The network is installed on the system board on network model printers.

Error Code 976 - Network Card X (X=Network card 1, 2, or 3)

A 976 error code indicates an unrecoverable software error in network card x. Verify that network card x is correctly installed in the socket on the interconnect board and is properly grounded. If you find no problem, contact your next level of support before replacing the network card.

54 Network <X> Software Error

This error displays when the RIP software detects that a network card is installed in slot x on the interconnect board but cannot establish communications with the network card.

3. Diagnostic Aids

Note: When trouble shooting, or prior to making any adjustment to print quality, always be sure of the following:

- The printer is installed on a level rigid surface.
- The OPCs are never exchanged. Do not exchange a black OPC for a color OPC, as they have different surface phase counts.
- Radar Page is always used when adjusting print registration.

Power-On Self Test Sequence

1. Power on.
2. Printer and RIP controller check:
   - ROM and RAM
   - Fuser thermistor
3. Printer hardware check:
   - Paper jam
   - Printer cartridge unit
   - Toner supply
   - Paper cassette present
4. Fuser temperature check. Temperature regulated.
5. Ready:
   - Printer controller
   - RIP controller
   - Printer condition
   - Motor/Fan
   - Heater
6. DC motor drive 1
7. Feeding paper
8. Print
9. Stepper motor drive 2
10. Paper exit
11. Stop

Using the Operator Panel

The operator panel on your printer has a 2-line by 16-character liquid crystal display (LCD), five buttons, and one indicator light.

The light indicates whether the printer power is on and whether the printer is idle or busy processing a job.

Indicator Light

State	Indicates
Off	Printer power is off.
On	Printer is on, but idle.
Flashing	Printer is busy processing a job.

Use the five operator panel buttons to open a menu, scroll through a list of values, select printer settings, and clear error messages.

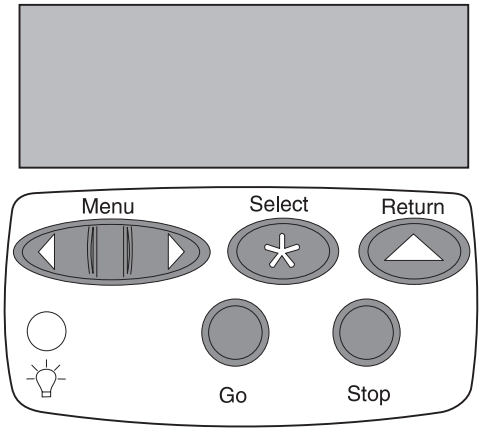

Operator Panel Buttons

Button	Function
Go	Press **Go** to: • Exit printer menus and return the printer to the ready state. • Clear certain messages from the display. If you've changed printer settings from the operator panel menus, press **Go** before you send a job to print.
Menu > and <Menu	Press **Menu>** or **<Menu** to: • Enter the menus from the ready state. • Scroll to the next (**Menu>**) or the previous (**<Menu**) menu, menu item, or value. • Increase or decrease a numerical value for a menu item setting. • Display the Job Menu or the Supplies Menu while the printer is busy.
Select	Press **Select** to: • Select the menu shown on the second line of the display and view the available menu items. • Select the menu item shown on the second line of the display and view the available values and the current user default setting for that menu item. • Save the value displayed on the second line of the display as the new user default setting. • Clear certain messages from the display.
Return	Press **Return** to back up to the previous level of the menu structure without selecting a new menu item or value.
Stop	Press **Stop** when the printer displays the **Busy** or **Waiting** message to temporarily stop all activity. The message **Not Ready** is then displayed until you press **Go** to continue printer activity. For example, if you need to load paper in a tray while a job is printing, press **Stop** and wait for the printer motors to idle before removing the tray from the printer. Reinsert the loaded tray, and then press **Go**.

Printing the Menu Settings

1. From the printer operator panel, press **Menu** to enter the menus.
2. Continue to press and release **Menu** until you see **TESTS MENU**.
3. Press **Select**. **TESTS MENU** is displayed on the first line, and **Print Menus** is on the second line**.**
4. Press **Select** again to print the page. The message **Printing Menu Settings** is displayed. The printer returns to **Ready** status after the menu settings page prints.

Operator Menu Disabled

If the operator has disabled the menu and you want to run operator print tests, turn the machine off, and then press **Go** and **Stop** as you turn the machine on.

Menu Overview

SUPPLIES MENU	UTILITIES MENU	COLOR MENU
Belt Block Photo Dev Coating Roll Color Photo Dev <color> Toner Fuser Replace Supplies Supplies Life	Color Samples Print Alignment Print Menus Print Net <x> Setup Print Fonts Print Directory Factory Defaults Format Flash Defragment Flash Format Disk Job Acct Stat Hex Trace	Color Correction Manual Color Print Mode Toner Darkness
PAPER MENU	FINISHING MENU	USB MENU
Paper Source PAPER SIZE PAPER TYPE CUSTOM TYPES Configure Bins Assign Type/Bin Substitute Size Configure MP Paper Weight Paper Loading Universal Setup	Duplex Duplex Bind Copies Blank Pages Collation Separator Sheets Separator Source Multipage Print Multipage Order Multipage View Multipage Border	PCL SmartSwitch PS SmartSwitch MAC Binary PS NPA Mode USB Buffer Job Buffering

JOB MENU	SETUP MENU	PCL EMUL MENU
Reset Printer Cancel Fax Confidential Job Held Job	Printer Language Printer Usage Power Saver Resource Save Download Target Print Timeout Auto Continue Wait Timeout Jam Recovery Page Protect Display Language Alarm Control Job Accounting Job Acct Limit	Font Source Font Name Point Size Pitch Symbol Set Orientation Lines per Page A4 Width Auto CR after LF Auto LF after CR Tray Renumber
POSTSCRIPT MENU	PARALLEL MENU	SERIAL MENU
Print PS Error Font Priority Image Smoothing	PCL SmartSwitch PS SmartSwitch MAC Binary PS NPA Mode Parallel Buffer Job Buffering Advanced Status Protocol Honor Init Parallel Mode 1 Parallel Mode 2	PCL SmartSwitch PS SmartSwitch NPA Mode Serial Buffer Job Buffering RS-232/RS-422 RS-422 Polarity Serial Protocol Robust XON Baud Data Bits Parity Honor DSR
NETWORK MENU	INFRARED MENU	LOCALTALK MENU
PCL SmartSwitch PS SmartSwitch MAC Binary PS NPA Mode Network Buffer Job Buffering network <x> setup Std Net Setup	Infrared Port PCL SmartSwitch PS SmartSwitch NPA Mode Infrared Buffer Job Buffering Window Size Transmit Delay Max Baud Rate	LocalTalk Port PCL SmartSwitch PS SmartSwitch NPA Mode LocalTalk Buffer Job Buffering NPA Hosts LocalTalk Name LocalTalk Addr LocalTalk Zone

Diagnostic Mode

To access the diagnostics printer settings and operations:

1. Turn off the printer.
2. Press and hold **Go** and **Return**.
3. Turn on the printer. Release the buttons after the **Performing Self Test** message displays.

Setting Printer Alignment

```
X= sxxx* Y= sxxx*
T= sxx*
```

The Alignment menu is formatted so that all menu items fit on a single screen as shown below. This allows manufacturing to quickly set and verify the registration setting. Terminology:

- X represents the X alignment horizontal, Y represents Y alignment vertical, and T represents Theta alignment. (The alignment of a curve of the horizontal position over the length of the line).
- s represents the sign for negative values. This space is blank for positive values.
- xx represents the margin value.
- An asterisk (*) is displayed next to the default value.

Upon first entering the Alignment menu, the X alignment sign/value pair will flash. This indicates it is the alignment value being changed. To change the value, press **Menu**. Once the desired value is displayed, press **Select** to save the value and move to the next margin value. The margin values are traversed in this order: X alignment, Y alignment, Theta alignment. If you need to skip an alignment value, then just press **Select**. The default value will remain the same.

If **Return** is pressed to exit the Alignment menu after a margin value has been incremented or decremented, then the default value is not changed. However, if the Alignment Test page is requested after a margin value has been incremented or decremented, then the default value is changed and then the Alignment Test page is printed using the new value. To verify the margin values are correct, you

must print the Alignment Test page. From the Alignment screen containing each of the alignment values, press **Go**. This button serves as a hot key to the alignment (X= sxxx* Y= sxxx* T= sxxx*) test page. While the page prints the Power indicator blinks and the following message displays:

```
Alignment Test
Printing...
```

No buttons are active while the Alignment Test page is printing. Once it is complete, the Alignment screen will be displayed again. The previously active margin value flashes. The printer attempts to print the Alignment Test page from the default paper source. If the default source only supports envelopes, then the page prints from Tray 1.

Note: The Alignment Test page should be printed on Letter or A4 paper only. To exit the Alignment menu, press **Return**.

Print Tests

Input Source Print Tests

The Diagnostic Input Source Print Tests may be used to verify that the printer can print on media from the installed input sources, which are available within the Print Tests menu. Chose from following:

- **Single** (prints the Print Test page once).
- **Continuous** (prints the Print Test page until **Return** or **Stop** is pressed).

The content of the Print Test page varies depending on the media installed in the selected input source. If a source is selected that contains paper, then a page similar to the Quick Test page prints. If a source is selected containing envelopes, the Envelope Print Test pattern prints. This pattern contains text of each character in the selected symbol set.

If **Continuous** is selected, all sources printing with paper sizes will print the same page continuously until the test is stopped. If the source contains envelopes, then the envelope print test pattern prints on the first envelope and subsequent envelopes are blank.

Note: The Print Test page can be printed on any paper or envelope size. More than one sheet of some media sizes may be required. The Print Test page will always print in simplex.

While the page prints, the following message displays.

```
<Source>
Printing...
```

The Power indicator also blinks while the page prints. If **Single** is selected, no buttons are active while the Print Test page prints. If **Continuous** is selected, **Return** or **Stop** can be pressed to cancel the test, producing the following message:

```
Cancelling...
```

Note: <input source> represents the input source selected for the Print Test. One of the following sources is displayed: Tray 1, MP Feeder, Standard Bin (Face-Down), or Output Bin 1. The value of the <media width> field is displayed when the narrow media sensor determines the media used for the Quick Test is narrow or wide, (**N** for narrow, **W** for wide).

Print Quality Pages

Execution of this diagnostic function causes the printer to print the Print Quality Test Pages. Since the printer is in diagnostics mode, the toner cartridge lockout functionality is disabled. Print Quality Pages can be printed from the Configuration Menu Group. When printing using this method, the toner cartridge lockout functionality is enabled. These pages cannot print unless a cartridge with a Machine Class ID matching the Machine Class ID stored in NVRAM is installed.

Note: Additional diagnostic information relating to print quality may be printed on the Print Quality Pages when executing this diagnostic function. This additional information is not printed when the Configuration Menu Group method is used.

As the pages are printed, the printer posts:

```
Prt Quality Pgs
Printing...
```

Once started, this operation cannot be cancelled. All keys are ignored while this message is posted.

Note: The <media width> field is displays once the printer's narrow media sensor determines the media used for the Quick Test is narrow or wide (**N** for narrow, **W** for wide).

Hardware Tests

LCD Hardware Test

The LCD Hardware Test causes the printer to continually execute the LCD display test. To cancel the test, press **Return** or **Stop**.

Button Test

The Button Test is used to verify the operation of each button on the operator panel. When Button Test is selected, the following screen displays:

```
OP  OP  OP  OP
        OP  OP
```

When a button is depressed, CL (Closed) displays. When a button is not depressed, OP (Open) displays. If the wrong message displays, the button is malfunctioning. To exit the button test, press **Return** or **Stop**.

DRAM Memory Test

The DRAM Memory Test is used to check the validity of DRAM (both standard and optional). Patterns of data are written to DRAM verifying each bit in memory can be set and read correctly. When this test is selected from the operator panel, the printer begins testing DRAM memory and the following screen displays.

```
DRAM Memory Test
P:##### F:#####
```

Terminology:

P:###### represents the number of times the memory test finishes successfully. Initially 000000 displays for ######. The maximum pass count is 999,999.

F:##### represents the number of times the memory test finishes with errors. Initially 00000 displays for #####. The maximum fail count is 99,999.

The power indicator blinks indicating the memory test is in process. The printer runs this test continually. The test can be terminated by powering off the printer. Each time the test finishes, the screen is updated with the result. If the test is successful, the Pass Count increments by 1. If the test fails, a failure message displays for approximately three seconds and the Fail Count increments by 1. Once the maximum pass count or fail count is reached, the test stops and final test results display.

ROM Memory Test

The ROM Memory Test is used to check the validity of the RIP code and fonts. When this test is selected from the operator panel, the printer begins testing ROM memory and the following screen displays.

```
ROM Memory Test
P:##### F:#####
```

Terminology:

P:###### represents the number of times the memory test finishes successfully. Initially 000000 displays for ######. The maximum pass count is 999,999.

F:##### represents the number of times the memory test finishes with errors. Initially 00000 displays for #####. The maximum fail count is 99,999.

The power indicator blinks indicating the memory test is in process. The printer runs this test continually. The test can be terminated by powering off the printer. Each time the test finishes, the screen is updated with the result. If the test is successful, the Pass Count increments by 1. If the test fails, a failure message displays for approximately three seconds and the Fail Count increments by 1. Once the maximum pass count or fail count is reached, the test stops and final test results display.

- ROM Checksum Error
- ROM Burst Read Error

Once the maximum pass count or fail count is reached, the test stops and the final test results display. Press **Return** or **Stop** to exit the test.

Parallel Wrap Test

The Parallel Wrap Test checks the operation of each parallel signal, using a wrap plug. To perform the wrap test, follow these steps:

- Disconnect the parallel interface cable, and install the parallel wrap plug.
- Select **HARDWARE TESTS** from the Diagnostics Menu.
- Select **Parallel Wrap** to initiate the Parallel Wrap Test.
- Select the appropriate Parallel Wrap Test (**Parallel Wrap, Parallel 1 Wrap**).

The printer begins testing the parallel hardware and the following screen displays:

```
Parallel Wrap
P:##### F:#####
```

Terminology:

P:###### represents the number of times the memory test finishes successfully. Initially 000000 displays for ######. The maximum pass count is 999,999.

F:##### represents the number of times the memory test finishes with errors. Initially 00000 displays for #####. The maximum fail count is 99,999.

The power indicator blinks indicating the memory test is in process. The printer continually runs the same test until cancelled from the operator panel by pressing **Return** or **Stop**. Each time the test finishes, the screen is updated with the result. If the test is successful, the Pass Count increments by 1.

If the test fails, the Fail Count increments by one and one of the following failure messages displays for approximately three seconds:

Sync Busy Error, Byte Interrupt Request Error, Strobe Interrupt Request Error, Init Fall Error, Init Busy Error, Init Rise Error, Host Busy Error, RAM Data FF Error, RAM Data AA Error, RAM Data 00 Error, RAM Data 55 Error, DMA Count Error, DMA Address Error, DMA Interrupt Error, DMA Memory Error, DMA Background Error, Clear Init Rise Error, False Init Rise Error, False Init Fall Error, Autofeed Rising Interrupt Error, Clear Autofeed Rise Error, False Autofeed Rise Error, Autofeed Falling Interrupt Error, Clear Autofeed Fall Error.

Once the maximum pass count or fail count is reached, the test stops and the final test results display. Press **Return** or **Stop** to exit the test.

Serial Wrap Tests

The Serial Wrap Test is used to check the each signal of the serial port hardware, using a wrap plug. To perform the wrap test, follow these steps:

- Disconnect the serial interface cable, and install the serial wrap plug.
- Select **HARDWARE TESTS** from the Diagnostics Menu.
- Select the appropriate Serial Wrap Test (**Serial Wrap, Serial 1 Wrap**).

the printer begins testing the serial hardware and the following screen displays:

```
Serial X Wrap
P:##### F:#####
```

Terminology:

x indicates which serial port is being tested (blank=standard serial, 1=optional serial port #1).

P:###### represents the number of times the memory test finishes successfully. Initially 000000 displays for ######. The maximum pass count is 999,999.

F:##### represents the number of times the memory test finishes with errors. Initially 00000 displays for #####. The maximum fail count is 99,999.

The power indicator blinks indicating the memory test is in process. The printer runs this test continually. The test can be terminated by powering off the printer.

Each time the test finishes, the screen is updated with the result. If the test is successful, the Pass Count increments by 1. If the test fails, a failure message displays for approximately three seconds and the Fail Count increments by 1.

Once the maximum pass count or fail count is reached, the test stops and final test results display:

Receive Status Interrupt Error, Status Error, Receive Data Interrupt Error, Transmit Data Interrupt Error, Transmit Empty Error, Threshold Error, Receive Data Ready Error, Break Interrupt Error, Framing Error, Parity Error, Overrun Error, Data Error, Data 232 Error, Data 422 Error, FIFO Error, DSR Error, DSR PIO Error, DSR Interrupt Error, CTS Error, CTS PIO Error, CTS Interrupt Error.

Once the maximum pass count or fail count is reached, the test stops and the final test results display. Press **Return** or **Stop** to exit the test.

Device Tests

Quick Disk Test

The Quick Disk Test performs a non-destructive read/write on one block per track on the disk. The following message displays while the test is running:

```
Quick Disk Test
Testing...
```

The Power indicator blinks while the test is in progress. If the test is successful, the following message displays.

```
Quick Disk Test
Test Passed...
```

Press **Go**, **Return**, or **Stop** to return to the DEVICE TESTS screen. If the test fails, then the following message is displayed.

```
Quick Disk Test
Test Failed...
```

Press **Go**, **Return**, or **Stop** to return to the DEVICE TESTS screen. Canceling this test is not allowed.

Disk Test/Clean

The Disk Test/Clean Test causes the disk to be formatted, destroying all data on the disk and should not be attempted on a good disk. This test should only be used when the disk contains unusable data.

Note: This can be an extremely lengthy test depending on the disk size, and leaves the disk unformatted. See *Formatting the Hard Disk* in the *User's Guide*.

To run this test, select **Disk Test/Clean** from the DEVICE TESTS menu. The following message displays to warn the customer that all disk contents will be lost:

```
Files will be
lost Go/Stop?
```

To continue on with the test, press **Go**.

To exit the test immediately and return to the DEVICE TESTS screen, press **Return** or **Stop**. The Power indicator blinks while the test is in progress. Once **Go** is selected, the following screen displays to indicate the operation has begun:

```
Disk Test/Clean
Testing...
```

If the test is successful, the following message is displays.

```
Disk Test Clean
Test Passed
```

Press **Go**, **Return**, or **Stop** to return to the DEVICE TESTS screen. If the test fails, the following message displays.

```
Disk Test/Clean
Test Failed
```

Press **Go**, **Return**, or **Stop** to return to the DEVICE TESTS screen. Because of the nature of this operation, canceling of this test is not permitted.

Flash Test

The Flash Test writes and reads data to the flash device, destroying all data, leaving the flash unformatted. The servicer must reformat the flash using the Format Flash menu operation. To run this test, select **Flash Test** from the DEVICE TESTS menu. The following message displays warning the customer that all flash contents will be lost:

```
Files Will be
Lost Go/Stop?
```

To continue the test, press **Go**. To exit the test immediately and return to the DEVICE TESTS screen, press **Return** or **Stop**.

The following message displays while the test is running:

```
Flash Test
Testing
```

The Power indicator blinks while the test is in progress. If the test is successful, the following message displays:

```
Flash Test
Test Passed
```

Press **Go**, **Return**, or **Stop** to return to the DEVICE TESTS screen. The Power indicator turns on solid. If the test fails, the following message displays.

```
Flash Test
Test Failed
```

Press **Go**, **Return**, or **Stop** to return to the DEVICE TESTS screen.

Diagnostics - Printer Setup

Defaults

The following printer settings are used to determine whether U.S or non-U.S. factory defaults should be used:

- = U.S. *
- = Non U.S.

Light Quantity

- Cyan
- Magenta
- Yellow
- Black

Range = 0 to 45

If you replace one or more of the printheads, or the EEPROM for the engine controller, the Light Quantity value must be set to the value that is marked on the printhead. To set this value:

- Select **Diagnostic Mode**.
- Select **Printer Setup**.
- Select **Light Quantity** and enter the value from the label on the printhead.

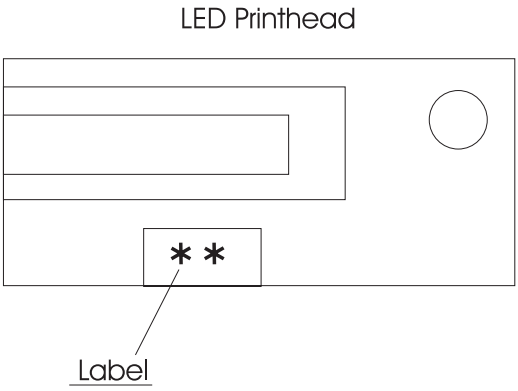

Par S Strobe Adj

Note: This message displays only if the printer is confused with the standard parallel port.

Par 1 Strobe Adj

Note: This message displays only if a parallel port is available through the PCL slot 1.

Auto Color Adj

- = On *
- = OFF

Reset Calibration

Press Select to reset.

Viewing and Resetting the Drum Counters

The drum counters increment when a page is printed. The drum counter for a particular plane increments (if that color is printed), by 1 for Letter, A4, A5, B5 and envelopes, and by 1.2 for Legal and B4. It increments by 2 for 11 x 17 and A3. The counters are used to track printer usage.

The current value of the drum counter may be viewed in the Diagnostic menus by selecting the **Drum Count** menu, but this value is not viewable from the Ready menu.

The following screen illustrates the operator panel when the cyan drum counter displays. The leftmost digit (‘1’ in this example) blinks, indicating it is the first digit to be changed. To change the value, press **Menu** until the desired value display. Press **Select** to move to the next digit. The next digit (‘2’ in this example) blinks. Continue modifying each digit using this method. To skip a digit (and keep its current value), press **Select**.

When **Select** is pressed after the final digit (5 in this example), the new page count is stored in NVRAM.

```
Cyan Drum Count
=12345
```

The drum counts can be reset by scrolling to the appropriate drum color and pressing **Select**.

Setting the Page Count

The page count can be changed through the Diagnostic menus. This menu is used by the servicer to reset the Page Count whenever the engine board, containing NVRAM memory, is replaced. When **Page Count** is selected from the PRINTER SETUP menu, the current page count displays as follows:

```
Page Count
=1234567*
```

The left-most digit (‘1’ in this example) blinks, indicating it is the first digit to be changed. To change the value, press **Menu** until the desired value displays. Press **Select** to move to the next digit. The next digit (‘2’ in this example) blinks. Continue modifying each digit using this method. To skip a digit (i.e. and keep it’s current value), press **Select**. When **Select** is pressed after the final digit (‘7’ in this example), the new page count is stored in NVRAM.

Viewing the Permanent Page Count

The permanent page count setting cannot be modified through the operator panel. It can only be viewed using the Diagnostics menus. When Permanent Page Count is selected, the following screen displays.

```
Perm Page Count
=1234567*
```

Serial Number

= XXXXXXX Printer Serial Number

This function displays the printer serial number.

Setting Configuration ID

The Configuration ID is used to communicate characteristics of the printer that cannot be determined by the hardware sensors. The Configuration ID is originally set when the printer is manufactured, but must be reset whenever the engine board, containing NVRAM memory, is replaced

The Configuration ID can be set through the Diagnostic menus. When **Configuration ID** is selected from the PRINTER SETUP menu, the current ID displays as follows:

```
Configuration ID
=123456
```

The left-most digit (‘1’ in this example) blinks, indicating it is the first digit to be changed. To change the value, press **Menu** until the desired value displays. Press **Select** to move to the next digit. The next digit (‘2’ in this example) blinks. Continue modifying each digit using this method. To skip a digit (i.e. and keep it’s current value), press **Select**. When **Select** is pressed after the final digit (‘6’ in this example), the Configuration ID is validated. If the ID is invalid, then the Invalid ID displays momentarily on Line 2 before the ID re-displays. If the ID is valid, it is stored in NVRAM and the printer automatically activates the new setting, in normal mode.

If a Configuration ID has not been set, then upon entry into diagnostics, the Configuration ID setup is the only Diagnostic function displayed until a valid ID is entered.

Diagnostics - Error Log

Viewing the Error Log

The Error Log provides a history of printer errors, containing the 12 most recent errors that have occurred on the printer. The most recent error displays in position 1, and the oldest error displays in position 12. If fewer than 12 errors have occurred, the oldest error displays in the position before the empty log entries begin. Empty log entries are identified with an error number of 000. Occupied log entries contain the error number for the message displayed on the operator panel. For example, 925 is contained in the log when a 925 service error occurs.

If an error occurs after the log is full, the oldest error in the log is discarded to make room for the new error. The printer stores identical errors in consecutive positions in the log. The following error messages are stored in the error log:

- All 2xx paper jam messages.
- All 9xx service messages

To view the error log, select the **Display Log** operation from the Diagnostics ERROR LOG menu. The entire error log cannot display on a single screen, four error log entries display per screen, requiring three screens. To move forward in the log, press **Menu>**, to move backward, press **Menu<**.The following are examples of the error log screens:

```
1-200   2-290
3-928   4-922
```

```
5-250   6-990
7-230   8-230
```

```
9-953   10-000
11-000  12-000
```

To exit the error log, press **Return** or **Stop**.

Clearing the Error Log

To clear the error log, select **Clear Log** from the ERROR LOG menu. The printer displays the following message:

```
Clear Log
= Yes
```

Select **Yes** to clear the log, as the empty log message displays as follows:

```
1-000   2-000
3-000   4-000
```

Select **No**, **Return** or **Stop** to exit the Clear Log menu.

Maintenance Menu

```
80 Fuser Maint
= 0 to xxxxxxx
```

```
Reset 80 Fuser
=Yes
```

```
80 Belt Maint
 = 0 to xxxxxxx
```

```
Reset Belt Maint
=Yes
```

Exiting Diagnostics Mode

To exit diagnostics mode and POR the printer into normal user mode, press **EXIT DIAGNOSTICS**.

4. Repair Information

Service Precautions

Observe the following precautions whenever you service the printer:

- Be sure to unplug the printer from the outlet before attempting to service the printer.
- To reassemble the printer, reverse the order of disassembly unless otherwise specified.
- Do not operate the printer anytime during disassembly. If it is absolutely necessary to run the printer with its covers removed, use care not to allow your clothing to be caught in revolving parts such as the gears, rollers, and fan motor.
- Never touch the terminals of electrical parts or high-voltage parts such as the high voltage power supply board.
- Be sure to handle the fuser carefully as it remains hot for a while after the printer stops running. Always unplug connectors by holding the connector housing.
- Be sure to use the fuse listed in the parts catalog.
- Do not forget to install the ground wire or ground plate to ensure positive conduction. Install the screw with a toothed washer in the right position at reassembly.

Handling Printed Circuit Boards

The following precautions must be observed when handling circuit boards with metal oxide semiconductor integrated circuits.

Transportation/Storage:

- During transportation or when in storage, new circuit boards must not be indiscriminately removed from their protective conductive bags.
- Do not store or place circuit boards in a location exposed to direct sunlight.
- When it becomes absolutely necessary to remove a board from its conductive bag or case, always place it on its conductive mat in an area as free as possible from static electricity.
- Do not touch pins of the integrated circuits with your bare hands.

Replacement:

- Before you unplug connectors from the circuit boards, be sure the power cord has been unplugged from the power outlet.
- When you remove a board from its conductive bag or case, do not touch the pins of the integrated circuits or the printed pattern. Place it in position by holding only the edges of the board.
- Before you plug connectors into the board, be sure the power cord has been unplugged from the power outlet.

Inspection:

- Avoid checking the IC directly with a multimeter; use connectors on the board.
- Never create a closed circuit across IC pins with a metal tool.
- When it is absolutely necessary to touch the integrated circuits and other electrical components on the board, be sure to ground your body.

Adjustments

High Capacity Paper Feed Timing Belt Adjustment

1. Secure the bracket with the screw, as shown.
2. Attach the spring and washer to the bracket with the screw.
3. Adjust the screw to 6mm +/- 1mm.
4. Tighten the screw completely.
5. Adjust the timing belt on the rear in the same manner.

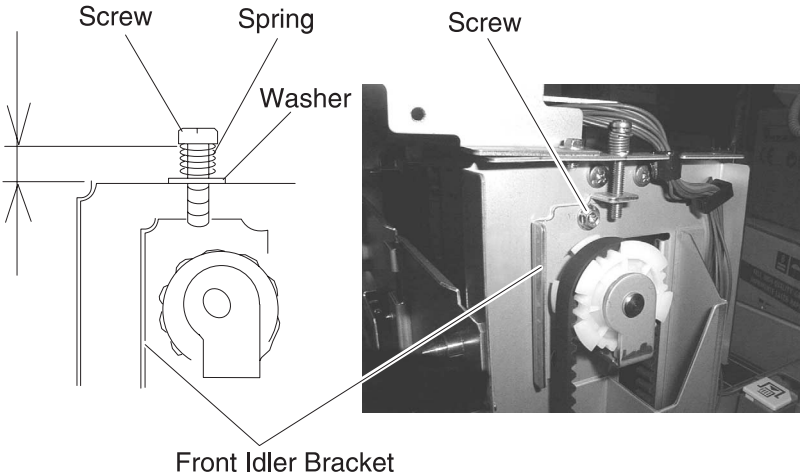

Removals

Cover, Top Removal

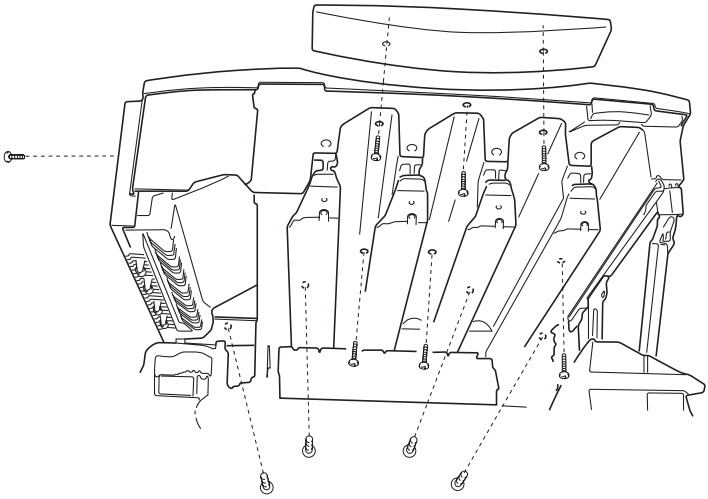

1. Remove the operator panel.
2. Remove five screws from the bottom, the four screws from the back side, and the screw from the left side.

Operator Panel Removal

1. Open the top unit and remove the toner cartridges and photoconductor drum units.
2. Remove the operator panel.
3. Remove the two screws from the operator panel case, and remove the case.
4. Remove the cable from the operator panel.

Cover, Front Removal

1. Remove the four hinge screws from the front cover.

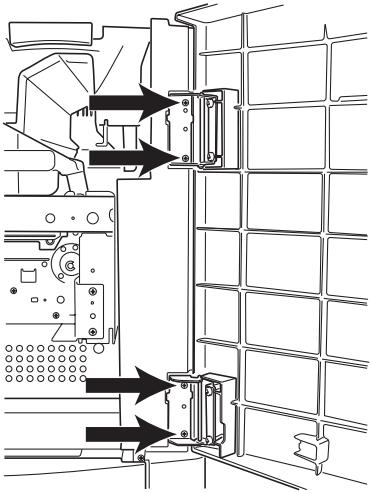

2. Remove the front cover

Cover, Front Left

1. Open the front cover and remove the cassette.
2. Remove the left front cover by removing the three screws.

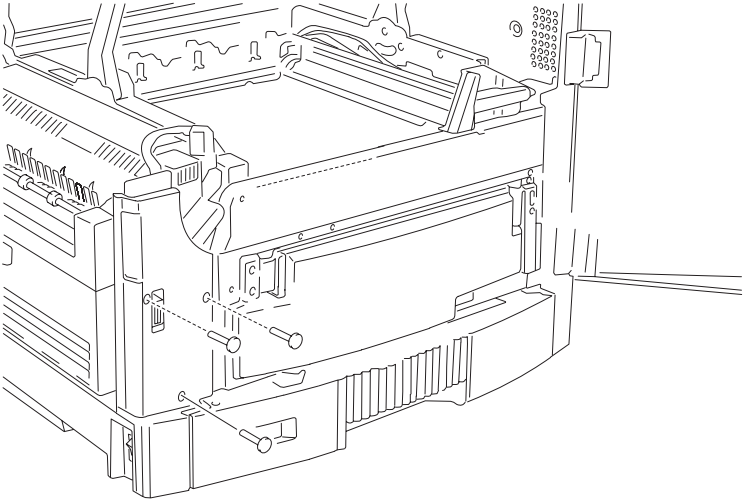

Cover, Rear Removal

1. Open the top unit.
2. Remove the three screws from the rear cover, and remove the cover.

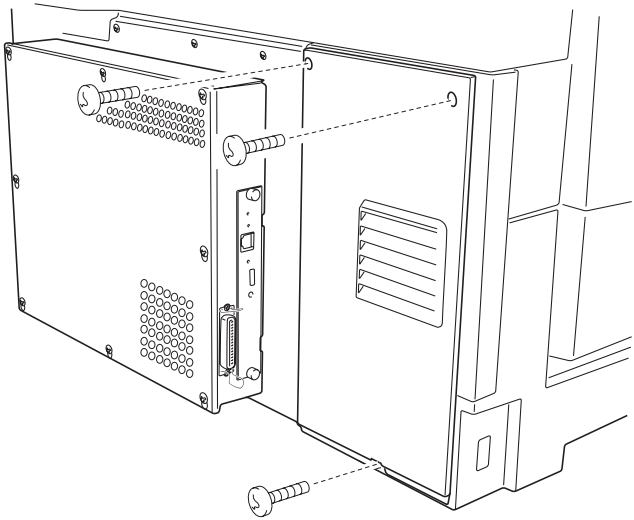

Cover, Solenoid Removal

1. Remove the screw from the solenoid cover.
2. Remove the solenoid cover.

Cover, Left Side Removal

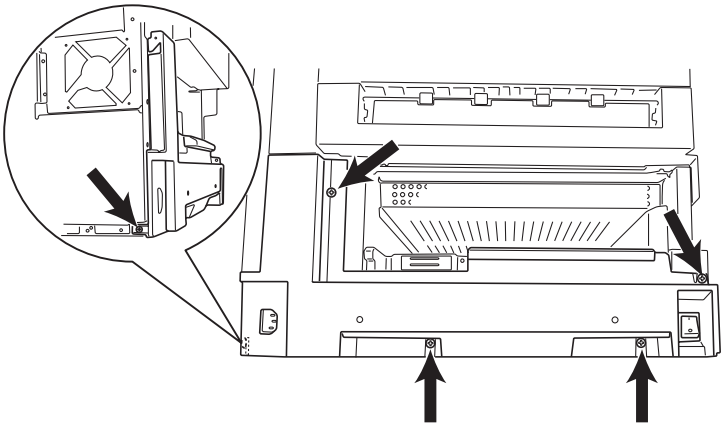

1. Remove the upper cassette, front cover, paper exit tray, and duplex unit.
2. Remove the five screws from the left side cover, and remove the cover.

Cover, Right Side Removal

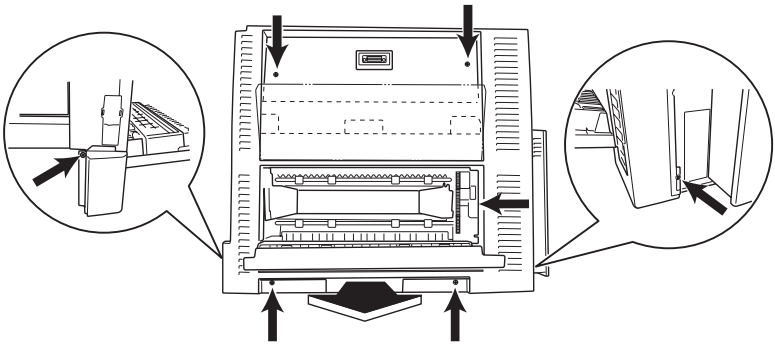

1. Open the top unit and remove the front cover and upper cassette.
2. Remove the seven screws from the right side cover together with the turn guide, and remove the cover.
3. When installing the right side cover, insert the turn guide shaft into the bearing.

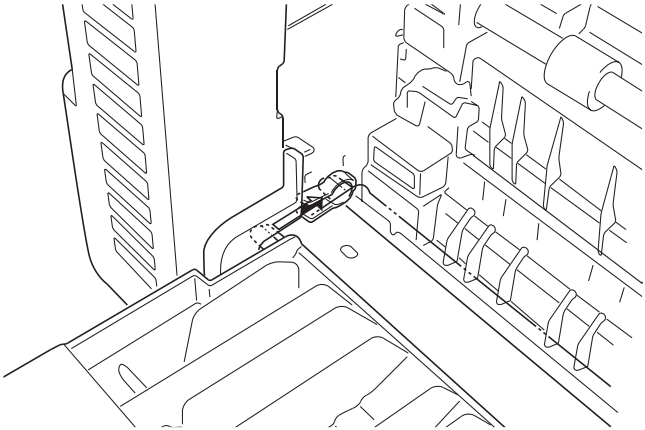

Cover, RIP Board Removal

1. Loosen the eight screws and remove the RIP cover by sliding upward.

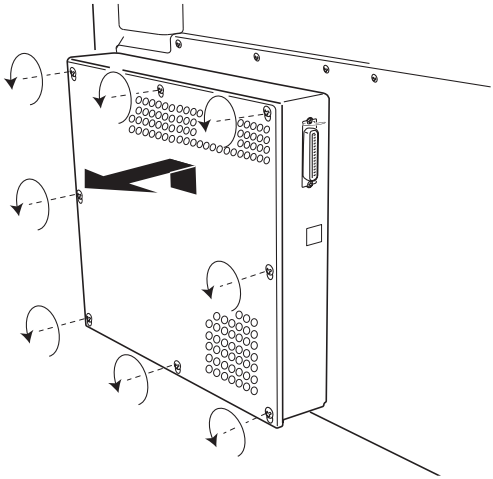

2. Remove the three harnesses and one flat cable of the RIP board connector.

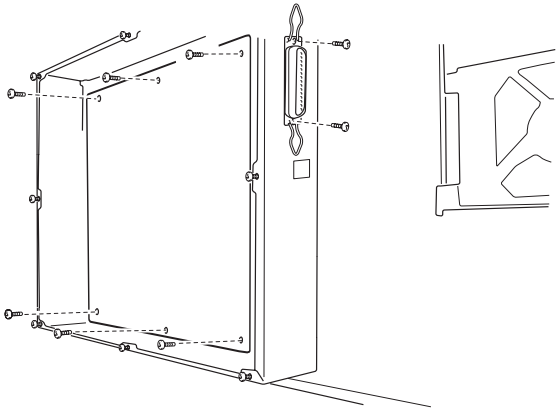

3. Remove the two screws from the parallel port connector and the screw from the USB connector.
4. Remove the eight screws from the RIP board together with the parallel connector, and remove the RIP board.

Tray, Paper Exit Removal

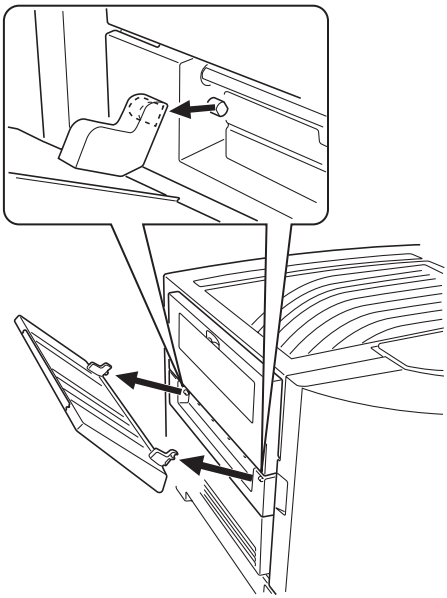

1. Unlatch the hinge at the back side, then unlatch the hinge on the front side.
2. Remove the paper exit tray.

RIP Box Removal

1. Remove the five screws from the RIP box.

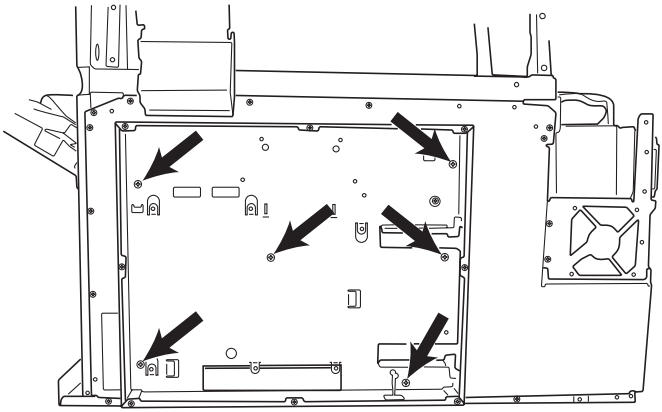

2. Slightly lift and remove the RIP box.

Electronic Box Removal

1. Open the top unit and remove the back cover, front cover, cassette, turn guides and right side cover.
2. Remove the screws from the electronic box.
3. Disconnect the two cables from the rear of the electronic box and remove the box.

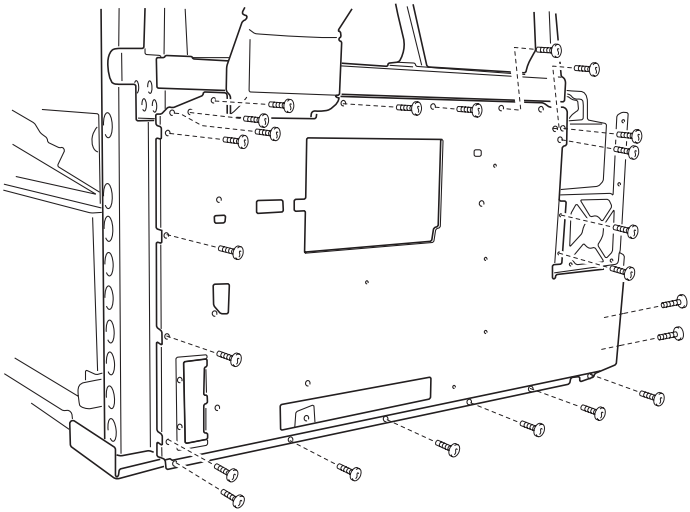

LED Printhead Removal

1. Open the top unit, remove the top cover, toner cartridges and photoconductor drum units.

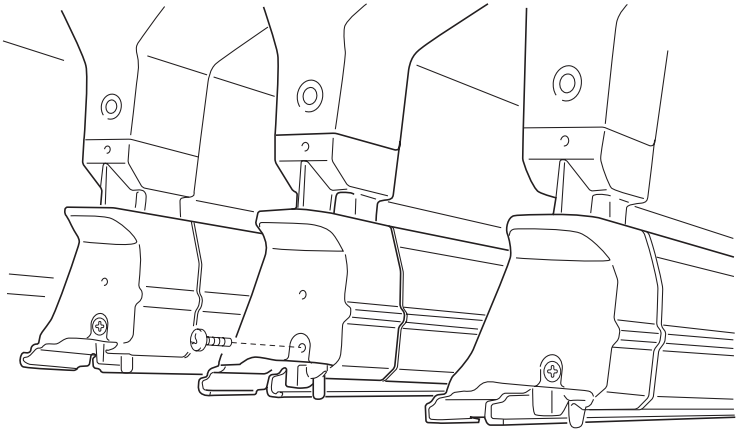

Note: Remove the transfer belt, or spread a cloth or paper over the transfer belt to protect it from damage.

2. Remove the screw from the printhead holder, and remove the holder.
3. Remove the front and rear printhead springs.
4. Remove the two screws (front and rear) from the right slide rail, and remove the rail.

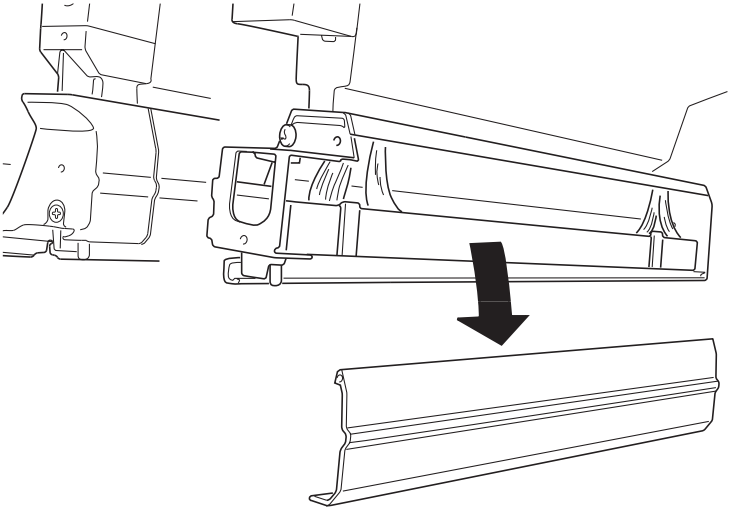

5. Remove the four connectors from LED printhead.
6. Remove the two screws from the ground wires.

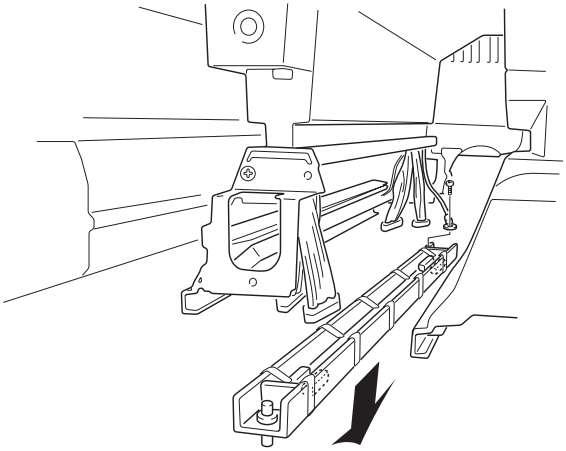

When replacing the LED printhead, replace the corresponding EEPROM shipped with the printhead, on the printhead controller board. Place the printer in **Diagnostic Mode**, input the printhead light quantity value plus **eight** (refer to note below) from the printhead label. Be sure to remove any fingerprints or stains from the printhead lens. The positioning pins at the both ends of the printhead are fixed with hexagon nuts. Do not loosen or remove either nut, as the image will un-focus.

Note: Light intensity value = printhead label value plus eight.

Eraser Removal

1. Remove the appropriate printheads. Spread a cloth or paper over the transfer belt to protect it from damage.
2. Remove the two screws from HSP holder, and remove the holder.

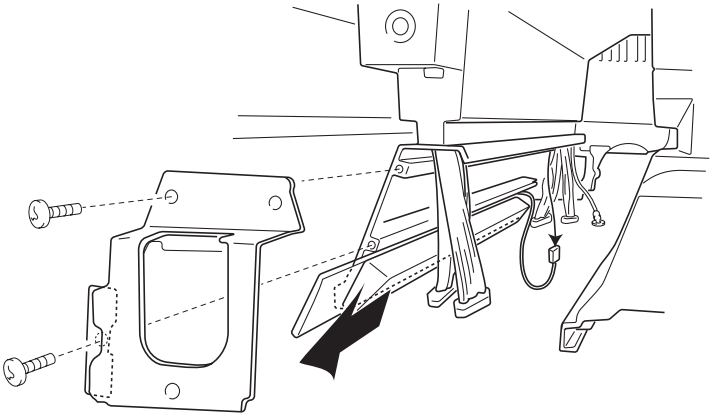

3. Remove the top cover.
4. Disconnect the connector (see arrow).
5. Remove the eraser.

Printhead Controller Board Removal

1. Remove the top cover.
2. Remove the 20 printhead controller board connectors.

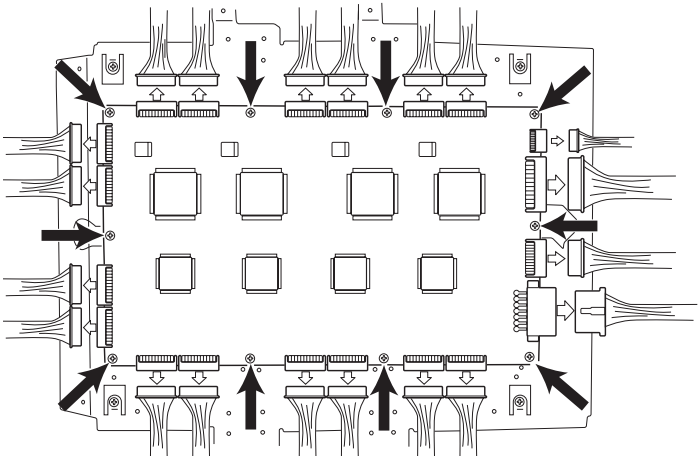

3. Remove the 10 screws from the printhead controller board, and remove the board.

Note: When replacing the board, be sure to return the four EEPROMs on the former board to the same positions on the new board.

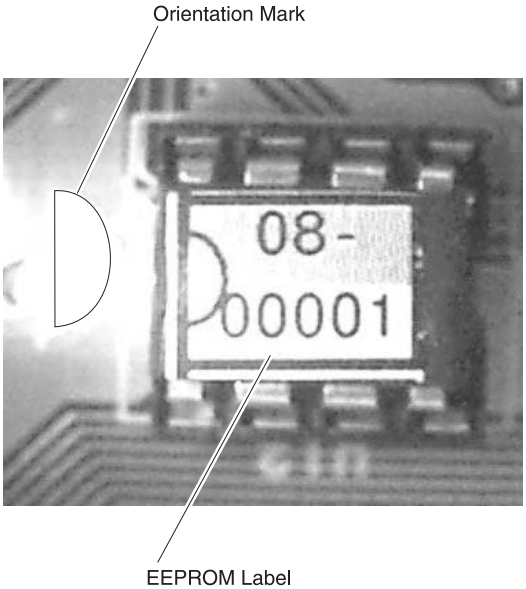

Upper Fan Removal

1. Open the top unit and remove the toner cartridges and photoconductor drum units, top cover, and face-down guide assembly.
2. Remove the four screws and the five screws from the upper bracket, and remove the bracket.

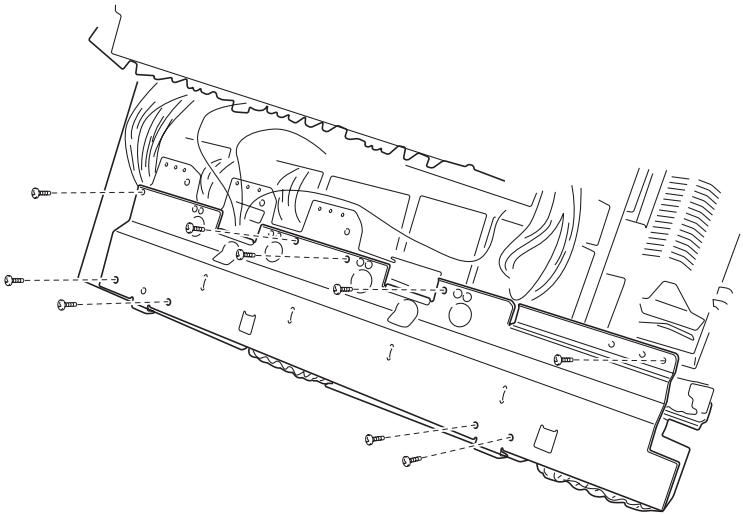

3. Remove the two screws from the left fan, and remove the fan.

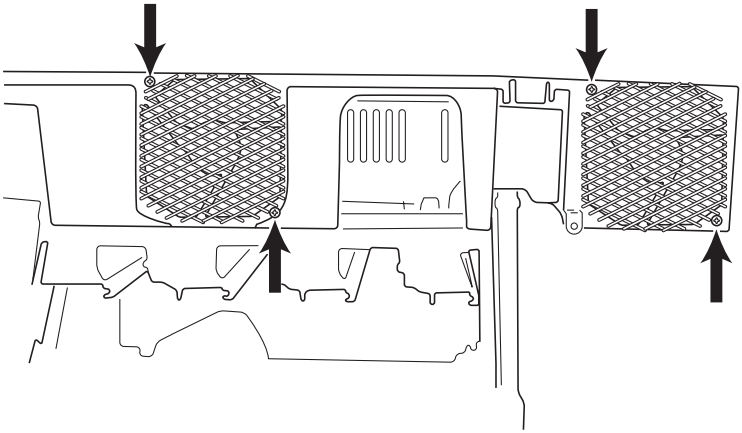

4. Remove the two screws from the right fan, and remove the fan.

Multi-Purpose Feeder Tray Removal

1. Open the top unit and remove the front cover, cassette feeder, turn guides and right side cover.

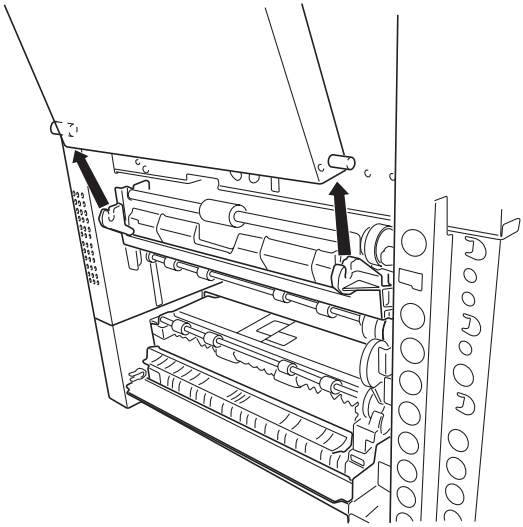

2. Open the multi-purpose feeder and slide it toward the magnet in the direction of the arrow, removing it from the printer.

Paper Feed Roller Removal

1. Remove the front cover.
2. Remove the manual paper feed tray.
3. Remove the right side cover and turn guide.
4. Remove the upper cassette.
5. Release the clutch and until the paper feed roller screw is visible. Turn the paper feed roller, and remove the screw from the roller.

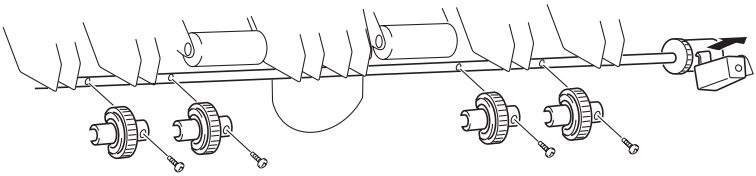

6. Remove the paper feed roller from the shaft.

Note: If the paper feed roller surface is stained with oil or other contaminants, clean it with cloth moistened with alcohol.

Paper Carrying Roller Removal

1. Open the turn guide.
2. Remove the two screws from the paper carrying roller, and slide the bearing forward.

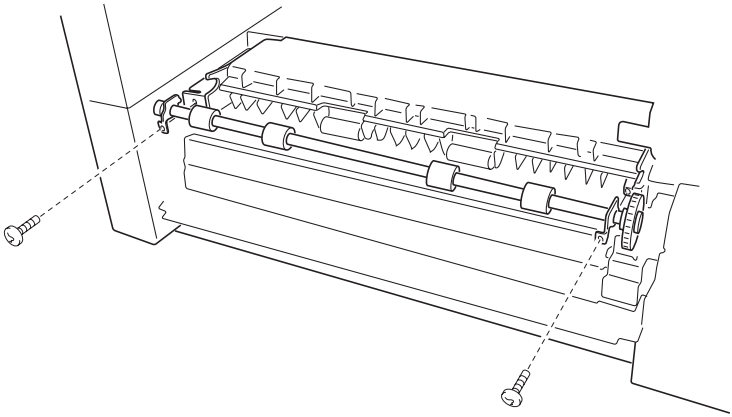

Paper Present Sensor Removal

1. Open the paper feed cover and pull out the duplex unit halfway.
2. Unclip the paper present sensor from the mounting.

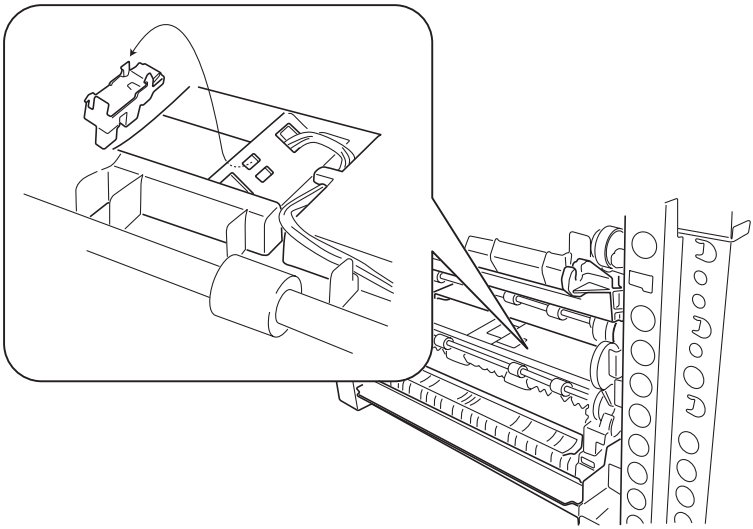

3. Disconnect the connector and remove the sensor.

Paper Feed Frame Removal

1. Open the top unit and remove the RIP board cover, RIP board, RIP box, and electronic box. Open the turn guide and paper feed cover and pull out the duplex unit halfway.
2. Remove the belt unit.
3. Disconnect the connector and remove the three screws, and the screw from the paper feed frame.

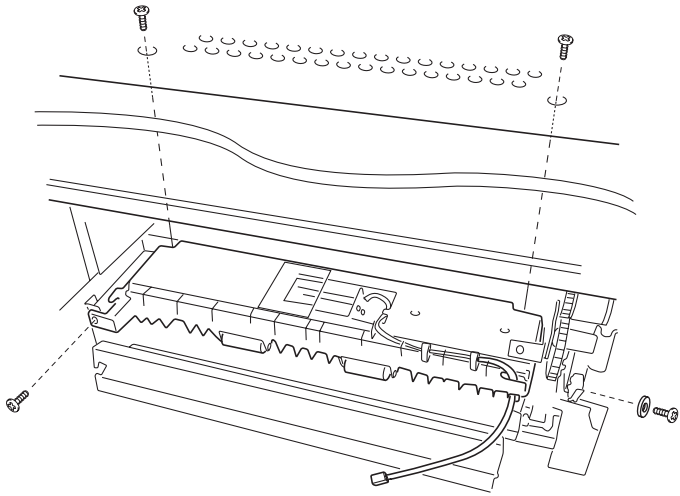

4. Remove the clip from the paper feed roller shaft and remove the gear.
5. Remove the paper feed frame.
6. Disconnect the sensor cable.

Cassette Guide Removal

1. Remove the paper feed frame.
2. Remove the front cover, cassette, turn guide, right side cover and paper feed frame.
3. Remove the screws from the cassette guide, and remove the guide.

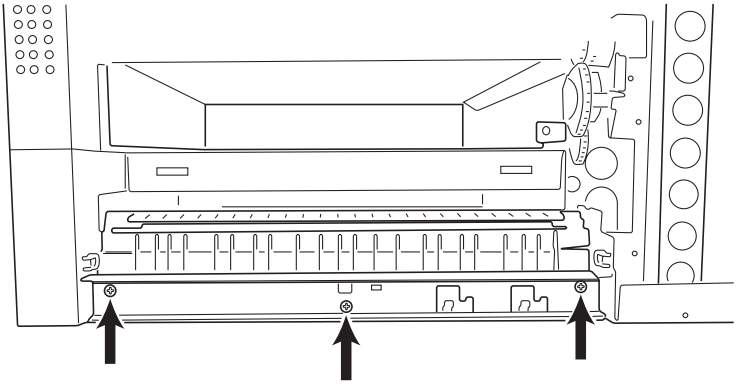

Temperature/Humidity Sensor Removal

Paper Feed Solenoid Removal

1. Open the top unit and remove the RIP cover, RIP board, RIP box, and electronic box.
2. Remove the screw from the temperature/humidity sensor, and remove the sensor.
3. Remove the two screws from the paper feed solenoid bracket and remove the solenoid.
4. Remove the spring from the solenoid plunger arm.

Note: Be sure to use the specific screws during installation. Long screws will damage the solenoid.

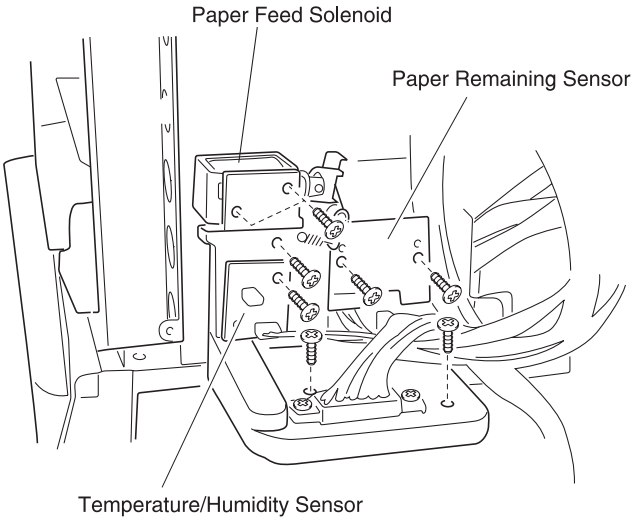

Paper Remaining Sensor Removal

1. Remove the paper feed frame.
2. Remove the two screws from the paper remaining detection sensor and remove the sensor.

Gear Cover Removal

Multi-Purpose Feeder Roll Removal

Multi-Purpose Feeder Clutch Removal

OHP Detection Sensor (Upper) Removal

1. Open the top unit, and remove the upper cassette, front cover, multi-purpose feeder, right side cover, and turn guide.
2. Remove the two screws from the gear cover, and remove the cover.

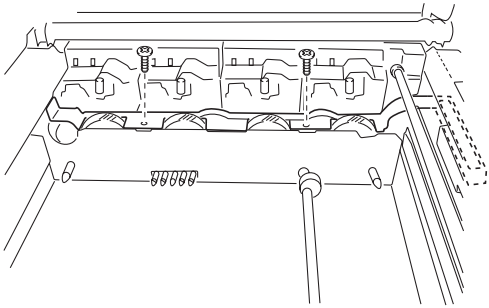

3. Remove the four screws from the multi-purpose feeder frame and the ground board screw.

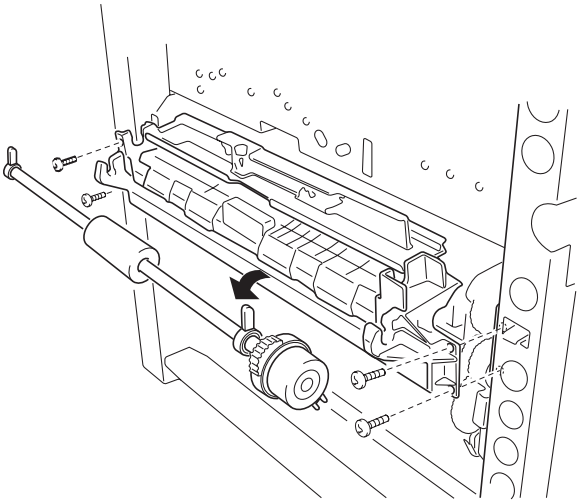

4. Disconnect the connector of the multi-purpose feeder paper feed sensor.
5. Pull out the multi-purpose feeder frame slightly.

6. Remove the screw from the OHP detection sensor (upper).

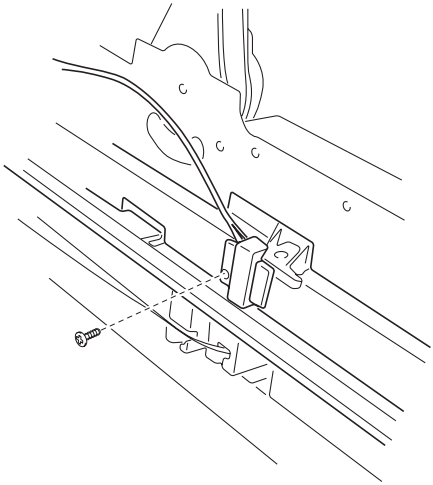

7. Turn the bearing stopper of the multi-purpose feeder roll forward 1/4 turn and remove upward.
8. Remove the C-clip and remove the multi-purpose feeder clutch.

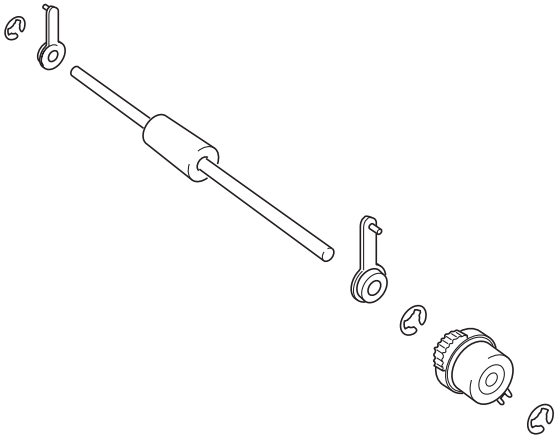

Note: After reassembling the components, coat the contact areas of the multi-purpose feeder roll shaft and multi-purpose feeder ground plate with conductive grease. If the paper feed roller surface is stained by oil or other contaminant, clean with cloth moistened with alcohol.

Fanning Pad Removal

1. Open the top unit and remove the upper cassette, front cover, turn guide, multi-purpose feeder, right side cover, and multi-purpose feeder roll.
2. Release clips at 4 positions and remove the fanning pad.

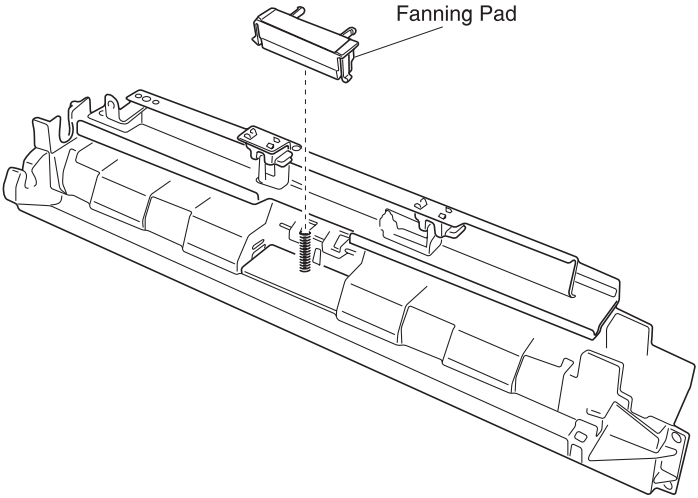

Registration Sensor Removal

1. Open the top unit and remove the upper cassette, front cover, turn guide, multi-purpose feeder, right side cover, and multi-purpose feeder frame.
2. Disconnect the connector of the registration sensor and remove the sensor.

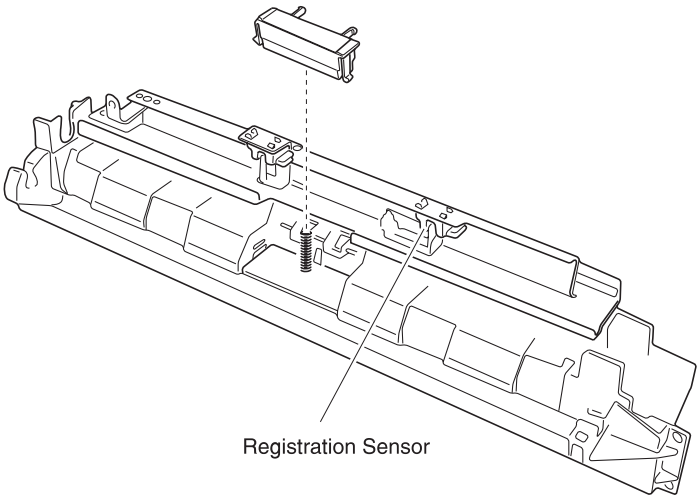

Multi-Purpose Feeder Paper Present Sensor Removal

1. Open the top unit and remove the upper cassette, front cover, turn guide, multi-purpose feeder, right side cover, turn guide, and multi-purpose feeder frame.
2. Disconnect the connector and remove the multi-purpose feeder paper present sensor.

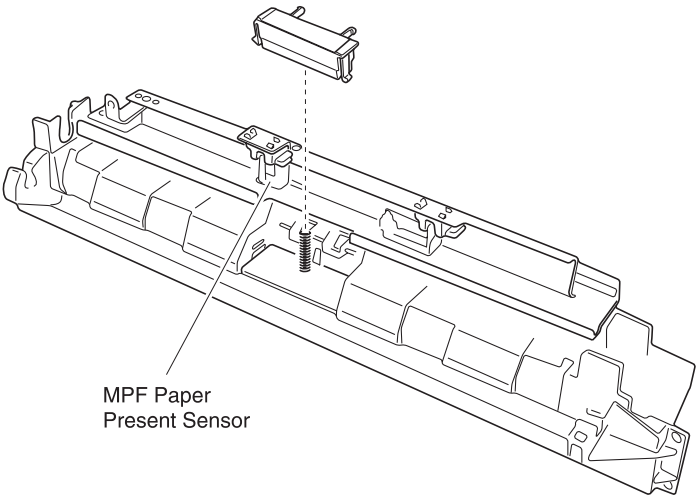

Paper Carrying Frame Removal

Paper Carrying Roller (Upper) Removal

Paper Carrying Clutch Removal

OHP Detection Sensor (Lower) Removal

1. Open the top unit and remove the upper cassette, front cover, turn guide, multi-purpose feeder, right side cover, turn guide, OHP detection sensor (upper), multi-purpose feeder frame, back cover, RIP cover, RIP board, RIP box, and electronic box.
2. Remove the four screws from the paper carrying frame.

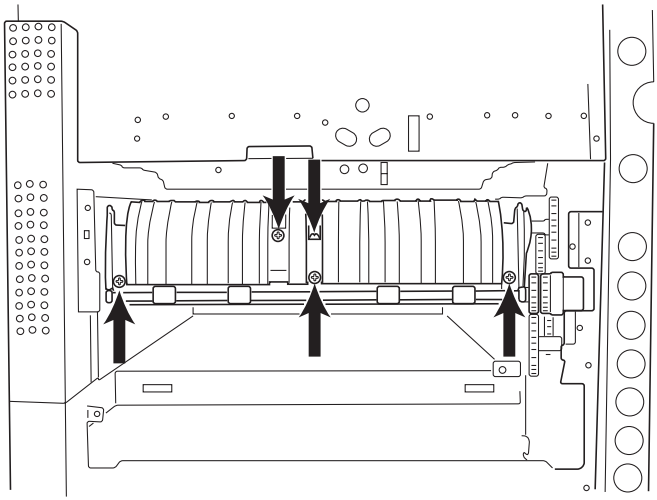

3. Remove the screw from the OHP sensor (lower).
4. Remove the paper carrying roller (upper).
5. Remove the paper carrying clutch.

Note: When installing, the clip of the paper carrying clutch should be securely set to the stop, and the shaft of the paper carrying clutch and spring should be securely in contact with each other.

Registration Frame, Registration Clutch Removal

1. Open the top unit, open the turn guide, open the paper feed cover and pull out the duplex unit halfway.
2. Remove the two screws from the registration frame.

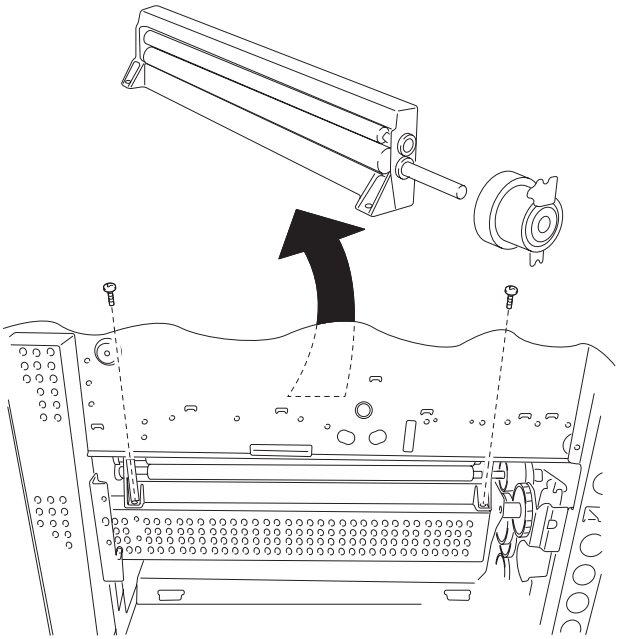

3. Remove the registration clutch.

Note: When installing, set the clip of the registration clutch to the stopper.

Transfer Belt Removal

To replace the transfer belt before the **Life Warning** or **Exhausted** messages appear, open the supplies menu on the operator panel and select **Replace Supplies,** select **Belt,** and select **Replace Now**. If the **80 Transfer Belt Life Warning** or **Exhausted** message appears on the display, press **Select** when the **Select = Replace** message appears. The message **Preparing for Maintenance** appears on the display, followed by **Printer Ready for Maintenance**, then **Power Off to Replace Items**. If the operator panel is inoperable or if you have an unrecoverable error code, perform steps 1 through 4 and then:

- Remove the transfer belt cover.
- Override the front cover interlock switch.
- Turn the printer on.
- Look for the belt to lower during power on sequence.
- Turn the printer off when the belt lowers.
- Turn the printer off and proceed with step 5.

WARNING: Do not turn the printer off until the **Power Off to Replace Items** message appears.

1. Turn the printer off along with any optional devices connected to the printer.
2. Open the front cover and top unit.

WARNING: Do not touch, drop or place anything on the transfer belt. Touching the surface of the transfer belt or placing items on the belt may cause damage.

3. Loosen the thumbscrews as shown.

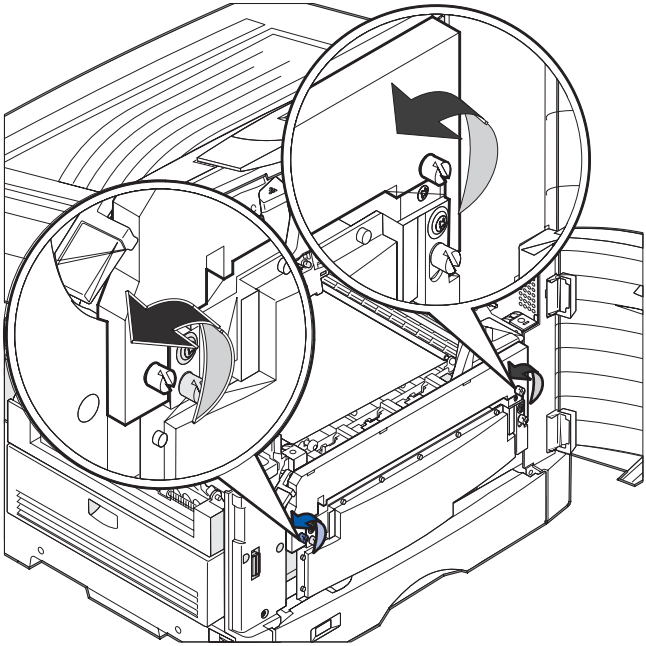

4. Lift and remove the transfer belt cover.

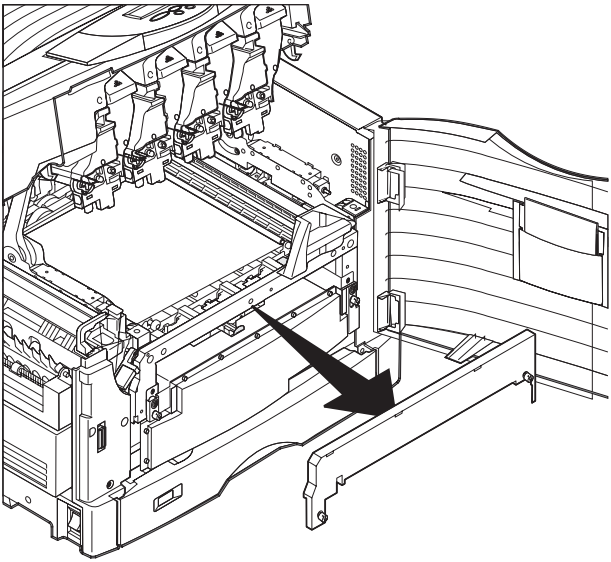

5. Loosen the thumbscrews as shown.

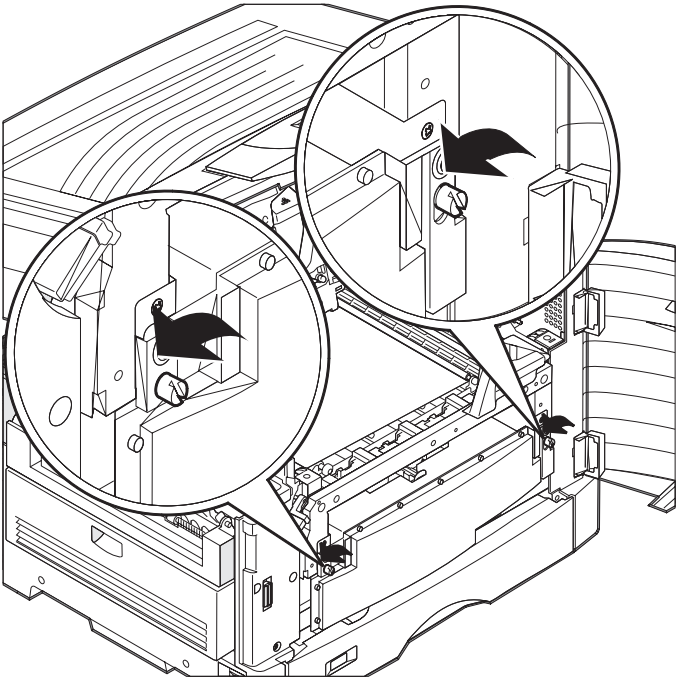

6. Pull the transfer belt out.

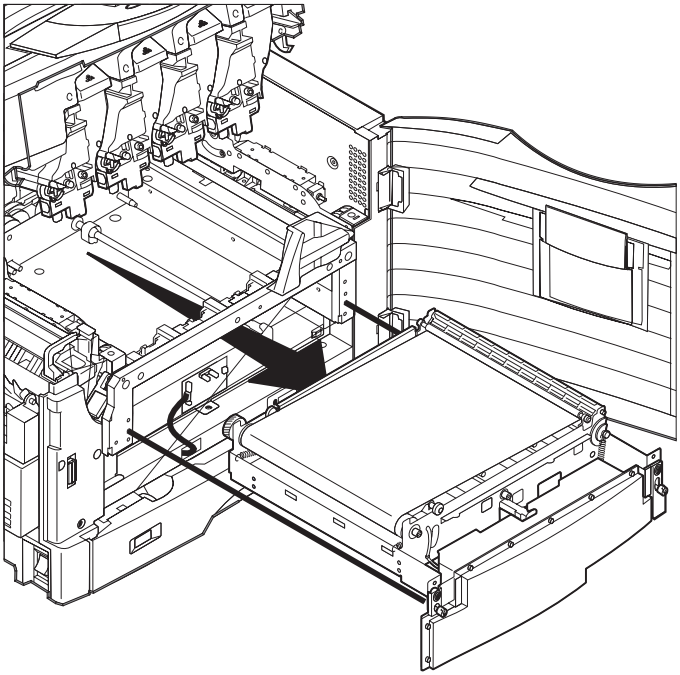

7. After replacing the transfer belt and removing the four shipping spacers, tighten the transfer belt thumbscrews and reinstall the transfer belt cover.
8. Close the top unit and rotate the locking lever to the right, close the front cover.
9. Turn the printer on.

Note: If the message **Did you Replace Belt?** appears, wait for the message **Select = yes Stop = no** and press **Select**.
If you replaced the belt before the **Life Warning** or **Exhausted** message appeared, open the supplies menu on the operator panel and select **Replace Supplies**, then select **Belt,** and select **Replaced**. The message **Printing Alignment Page** appears and the printer prints the alignment page.
Follow the instructions on the display to set the alignment values for the new transfer belt.

Belt Up/Down Detection Sensor Removal

1. Open the top unit and remove the waste toner bottle and belt unit.
2. Remove the belt up/down detection sensor from the mounting board.
3. Remove the connector from the belt up/down detection sensor.

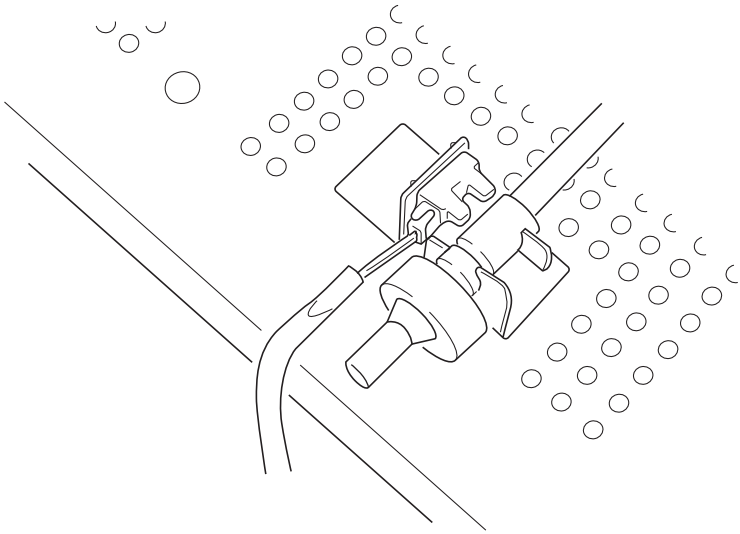

Sensor Board Removal

1. Remove the transfer belt unit.
2. Remove the four connectors.
3. Remove the three screws from the waste toner full sensor board.

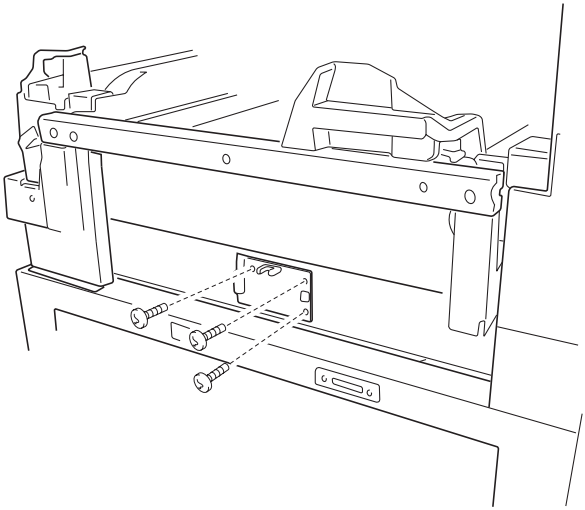

Density Sensor Removal
Separation Fingers Removal
Sensor Cleaner Removal

1. Open the top unit and remove the belt unit.
2. Remove the three screws from the sensor bracket.

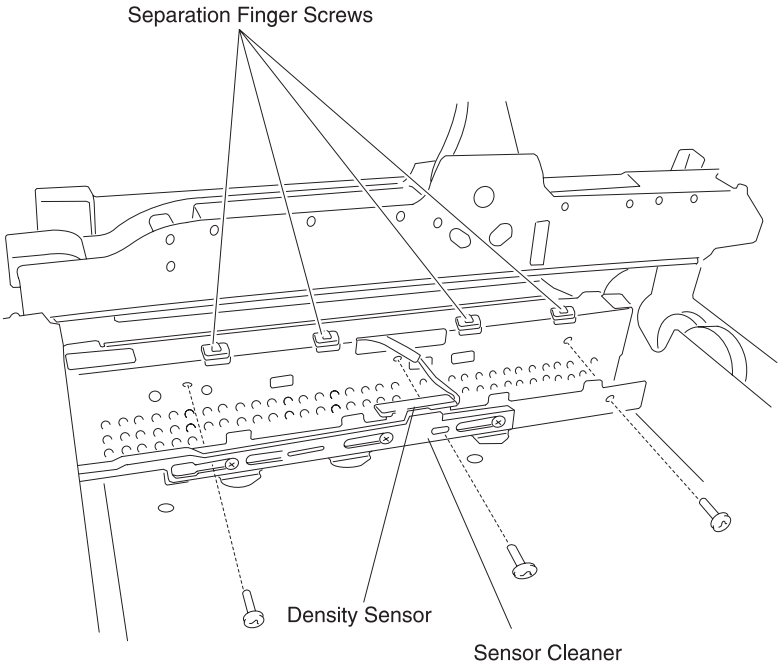

3. Remove the harness band and remove the two screws from the density sensor from the sensor bracket.
4. Remove the three set screws from the sensor cleaner assembly from the sensor bracket.
5. Remove the four separating finger screws from the fuser entrance guide.

Printer Controller Removal

1. Open the top unit and remove the RIP cover, RIP board, RIP box, and electronic box.
2. Remove the connectors and the eight screws from the printer controller.

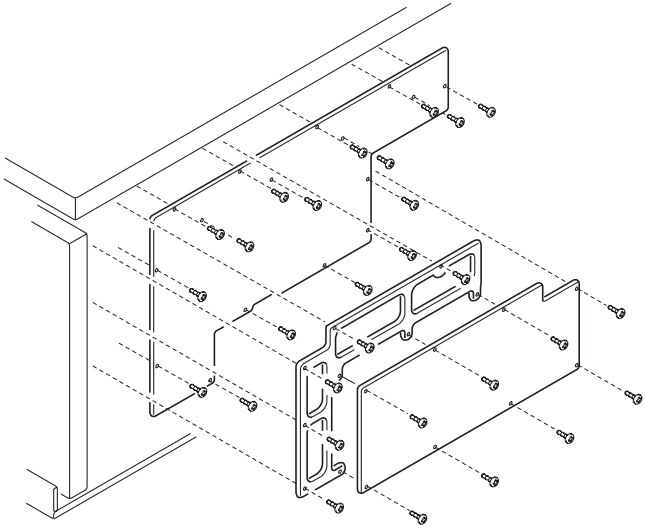

Note: When replacing the board, install the EPROM (U5) of the former board to the new board. Also, when replacing the EPROM, set the light intensity in the diagnostic mode and set the counter and printer alignment.

High Voltage Power Supply Board (HVU) Removal

1. Open the top unit and remove the RIP cover, RIP board, RIP box, electronic box, and printer controller board.
2. Remove the five screws from the printer controller board bracket.
3. Remove the connectors and remove the 12 screws.
4. Remove the high voltage power supply board.

R Sub Frame Removal
Toner Remaining Sensor Removal
Drum Gear Sensor Removal

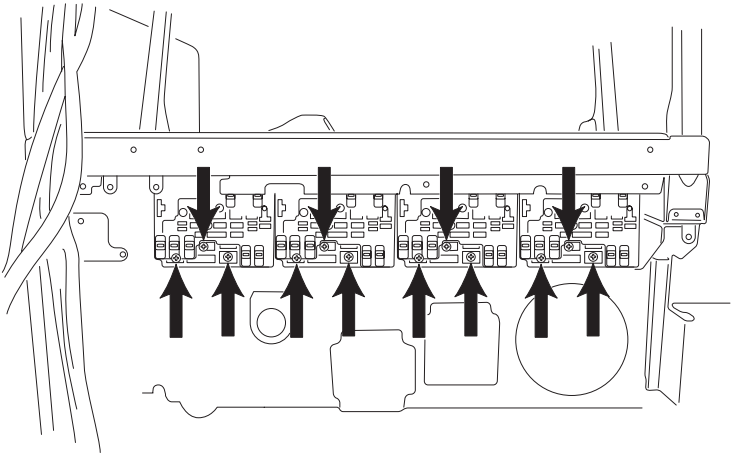

1. Open the top unit, and remove the RIP cover, RIP board, RIP box, electronic box, printer controller, printer controller bracket, and high voltage power supply board.
2. Remove the two screws from the sub frame R from inside of the main unit.
3. Remove the screw and C-clip from the sub frame cover.
4. Remove the screw from the toner remaining sensor. A different toner remaining sensor is used for each color.
5. Remove the screw from the drum gear sensor.

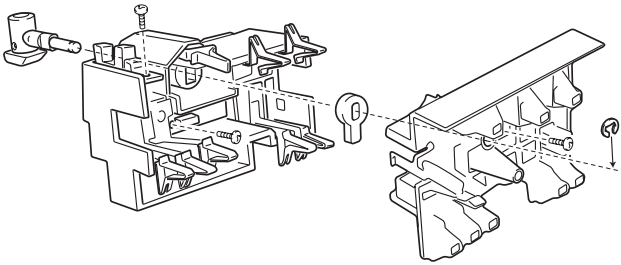

Note: Install the drum gear sensor to the colors specified.

- Yellow: Y-drum sensor assembly
- Black: K-drum sensor assembly

Sub Frame F1, Sub Frame F2 Removal

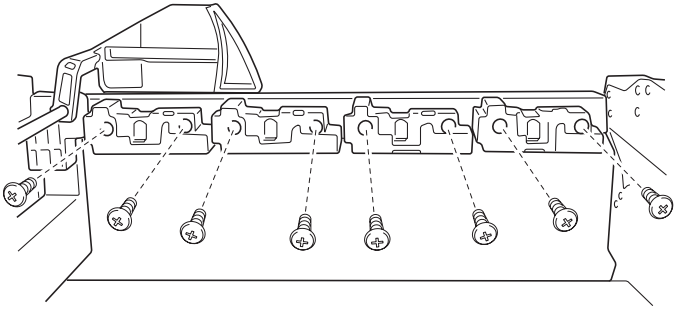

1. Open the top unit.
2. Remove the two screws from the sub frames F1 and F2.

Note: Spread a paper or cloth over the belt to protect the belt. Set the sub frame F to the position of the following colors depending on presence of upper detection button.

- Magenta: Sub frame F1 (Detection button available)
- Cyan: Sub frame F2 (Detection button unavailable)
- Yellow: Sub frame F2 (Detection button unavailable)
- Black: Sub frame F1 (Detection button available)

Drive Gear Unit Sensor Assembly Removal

1. Open the top unit and remove the gear cover, RIP cover, RIP board, RIP box, electronic box, printer controller, and high voltage power supply board.
2. Remove the screw from the drive gear unit sensor assembly.

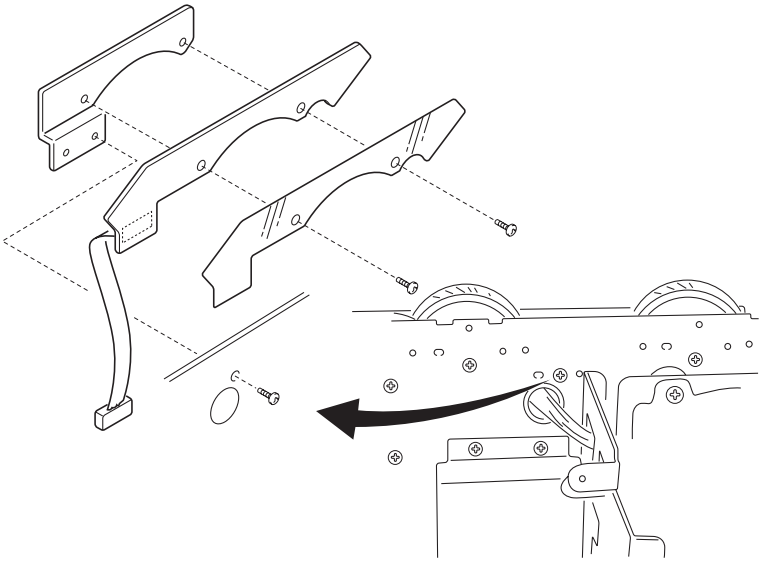

3. Remove the two screws of the drive gear unit sensor from the drum drive gear sensor assembly.

Belt Up/Down Clutch Removal

1. Open the top unit and remove the RIP cover, RIP board, RIP box, and electronic box. Remove the printer controller. Remove the printer controller bracket and the high voltage power supply board.
2. Remove the C-clip from the belt up/down clutch, and remove the clutch.

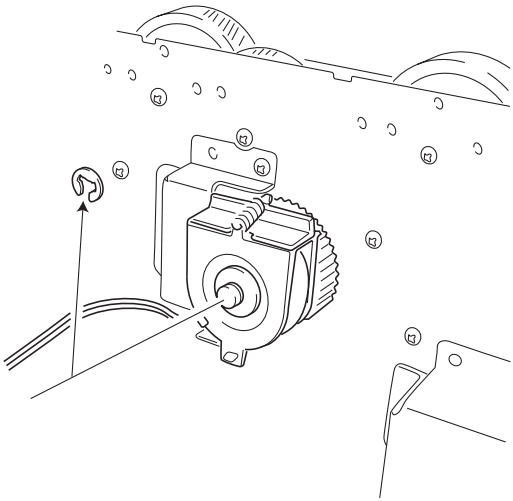

Power Supply 1 Removal

1. Open the top unit and remove the RIP cover, RIP board, RIP box, and electronic box. Remove the cassette, left front cover, and back cover. Remove the left side cover.
2. Remove the insulation sheet connector, two ground wires, five screws, two screws with washers, two screws with spring washers and remove the power supply. (When installing, incline the ground wire by 45 degrees.

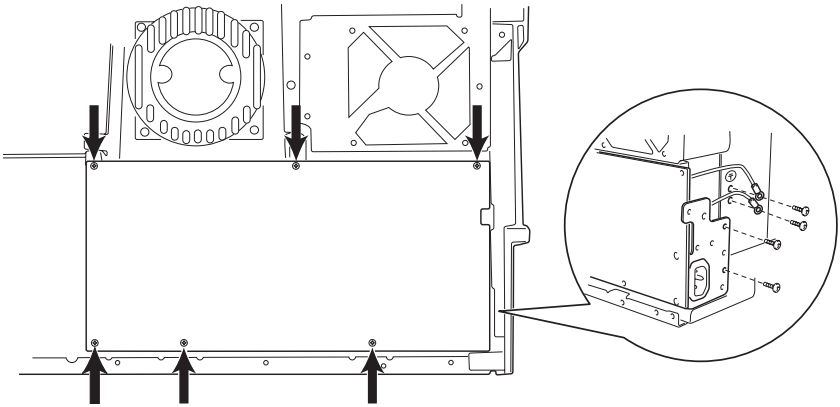

Power Supply 2 Removal

1. Open the top unit and remove the RIP cover, RIP board, RIP box, and electronic box.
2. Disconnect the connector and remove the seven screws from Power Supply 2, and remove the power supply.

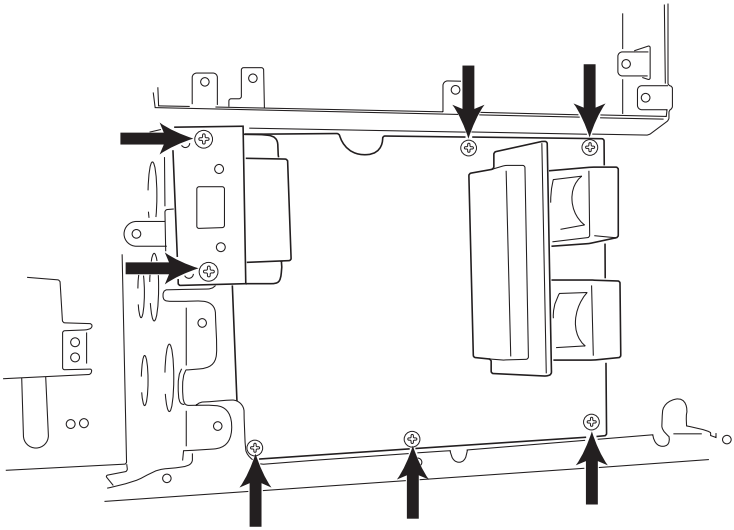

Drive Motor Assembly Removal

1. Open the top unit and remove the RIP cover, RIP board, RIP box, and electronic box.
2. Remove the upper cassette, left front cover, and back cover.
3. Remove the turn guide.
4. Open the paper feed cover and remove the duplex unit.
5. Remove the side left cover. Remove the connector, two ground wires, and power supply 1.
6. Remove the connector (CN2, CN4 and CN5) from the motor drive board.
7. Remove the four screws with spring washers from the drive motor.

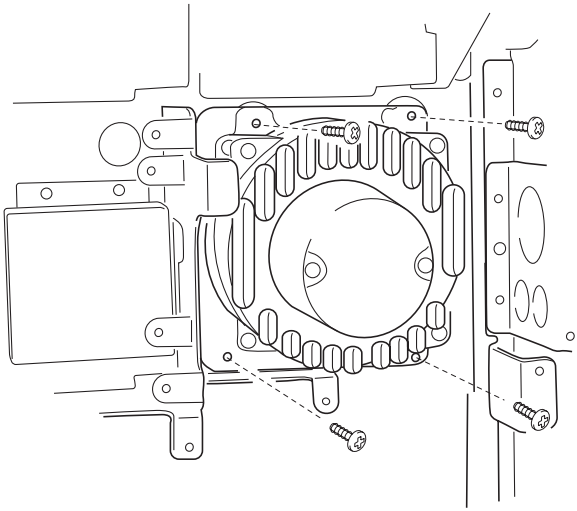

Note: When installing, hold the motor securely and mount the screws.

Motor Drive Board Removal

1. Remove the upper cassette, front cover B, paper feed cover, and the left side cover.
2. Disconnect the five connectors and remove five screws, and two screws from the motor drive board.

Power Switch Removal

1. Remove the upper cassette, left front cover, paper feed cover, and left side cover.
2. Unlock the power switch and pull out the power switch.

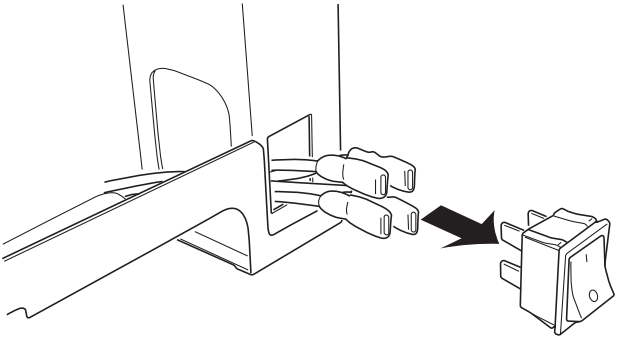

3. Remove each terminal connected to the power switch.

Note: When connecting, be careful to connect the connectors correctly. Insert the insulator cover completely covering the terminal.

Connector, Duplex Unit Removal

1. Open the top unit and remove the upper cassette, left front cover, paper feed cover, left side cover, RIP cover, RIP board, RIP box, and the electronic box. Remove the turn guide and open the paper feed cover and remove the duplex unit. Remove the left side cover and power supply A.
2. Disconnect the connector and remove the two screws from the mounting plate.
3. Remove the two screws of the drawer connector from the mounting plate drawer bracket.

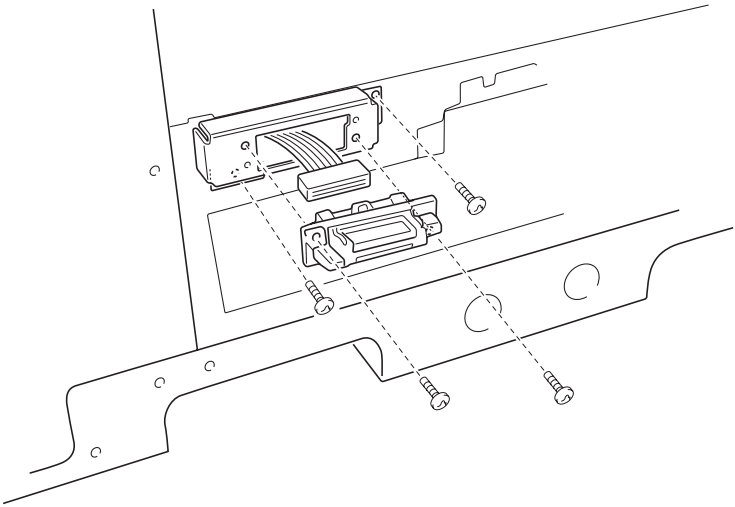

Paper Size Sensor Board Assembly Removal

1. Open the top unit and remove the RIP cover, RIP board, RIP box, and electronic box. Remove the upper cassette, front cover B, and back cover. Open the turn guide and paper feed cover and remove the duplex unit. Remove the left side cover and power supply A.

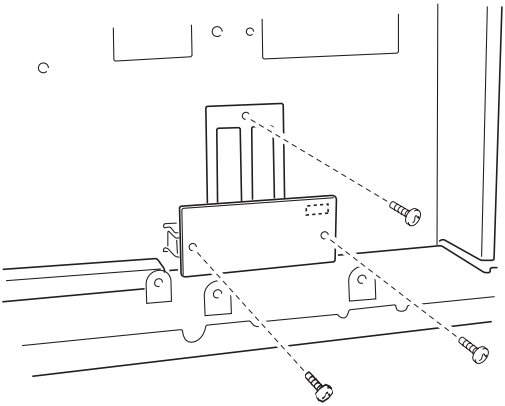

2. Disconnect the connector and remove the two screws from the paper size sensor board, removing the board.
3. Remove the screw from the size detection lever, and remove the lever.

Main Unit Fan Removal

1. Remove the left side cover, the solenoid cover, and the rear cover.
2. Remove the two screws from the main unit fan bracket.

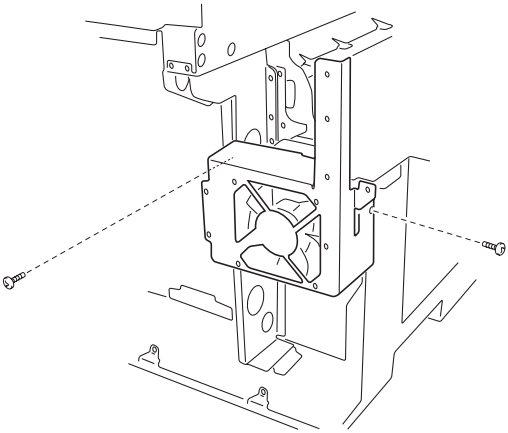

3. Remove the fan.

Main Drive Unit Removal

1. Open the top unit and remove the gear cover, upper cassette, left front cover, paper feed cover, RIP cover, RIP board, RIP box, electronic box, and rear cover.
2. Open the turn guide and paper feed cover and remove the duplex unit.
3. Remove the left side cover, power unit 1, and power unit 2.
4. Remove the printer controller board.
5. Remove the bracket, high voltage power supply board, and sub frame R.
6. Remove the fuser unit, face-up paper delivery unit, belt up/down clutch, and DC drive motor.
7. Remove the multi-purpose feeder roll, registration roll, and paper carrying frame.
8. Remove the eight screws from the power supply 2 bracket.
9. Remove the two screws from the belt power supply 2.
10. Remove the two screws from the fan bracket.
11. Remove the three screws from the fuser connector plate.

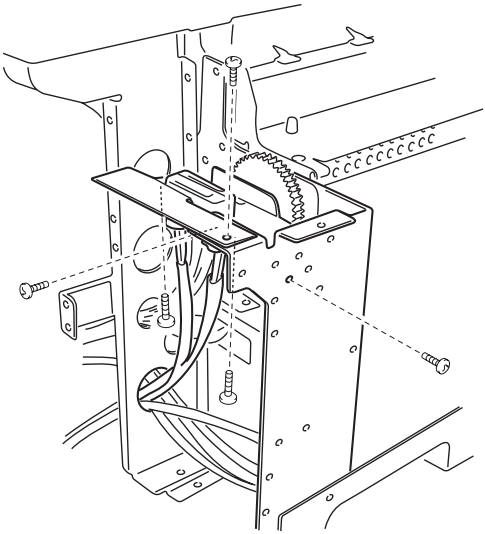

12. Remove the two screws of the fuser connector cable assembly from the fuser connector plate.

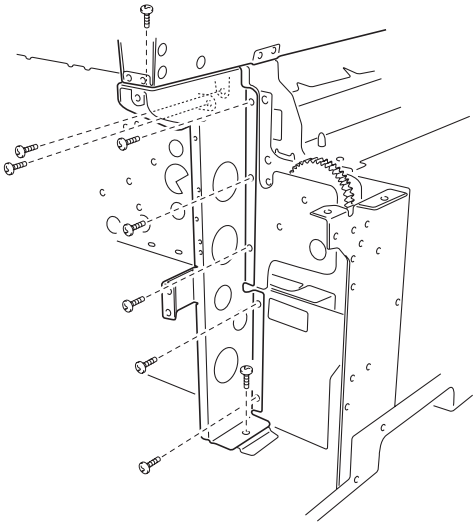

Note: Note the direction, when installing.

13. After removing the two screws on the bracket that attaches the rear side and paper exit side of the machine, remove the five screws, and four screws from the bracket as shown.

14. Remove the bearing from the belt up/down switching shaft and remove the belt up/down switching shaft.

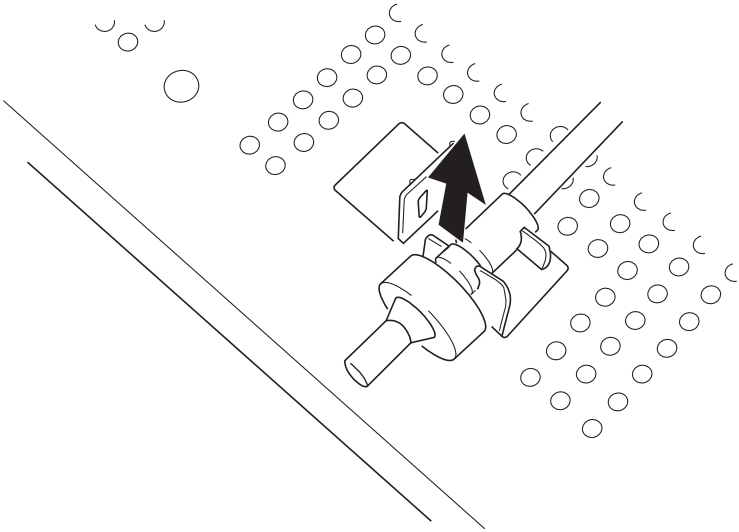

15. Remove the screw from the clutch stopper. The clutch stopper is attached to the ground plate with two screws.

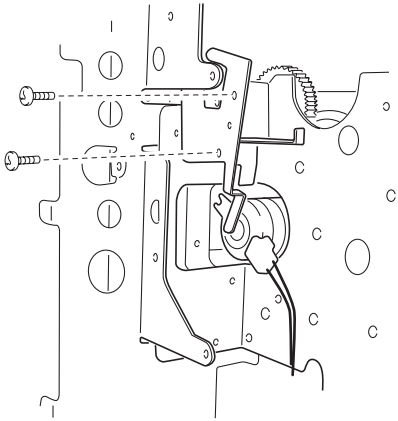

16. Remove the five screws on the right side.

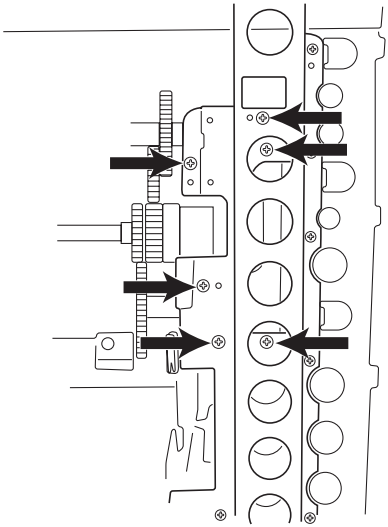

17. Remove the screw and the screw from the drive unit, and remove the unit.
18. Remove the two screws and the screw from the belt up/down clutch box and remove the belt up/down clutch.

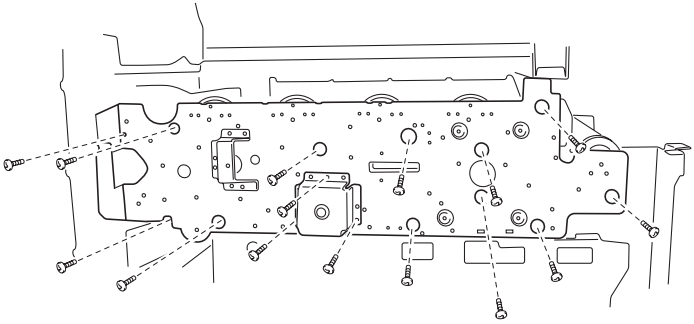

19. Remove the screw from the drum gear sensor and remove the sensor.

Face-Up Paper Exit Assembly Removal

Face-Up/Down (Flapper Detection) Sensor Removal

Face-Up/Down Solenoid Removal

Paper Delivery Sensor Removal

Paper Exit Tray Switch Removal

1. Open the top unit and remove the upper cassette. Open the duplex cover and remove the duplex unit.
2. Remove the left front cover, left side cover and rear cover.
3. Remove the three screws from the face-up delivery assembly and remove the assembly.

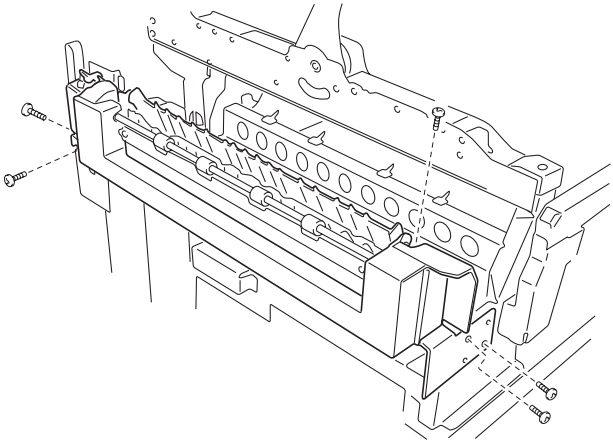

4. Remove the paper delivery sensor from the face-up paper delivery assembly.
5. Remove the face-up/down sensor from the face-up paper delivery.
6. Remove the two screws from the face-up/down solenoid and the face-up paper delivery assembly. Remove the assembly.
7. Remove the screw from the paper exit tray switch and the face-up paper delivery assembly. Remove the assembly.

Face-Down Guide Assembly Removal

Paper Exit Motor & Full Sensor Removal

1. Open the top unit and remove the toner cartridges, photoconductor drum units, and upper cover.
2. Remove the top cover.
3. Disconnect the connector and remove the five screws and two snap bands from the face-down guide assembly. Remove the assembly.
4. Remove the four screws from the face-down cover and the face-down guide assembly, and remove the assembly.

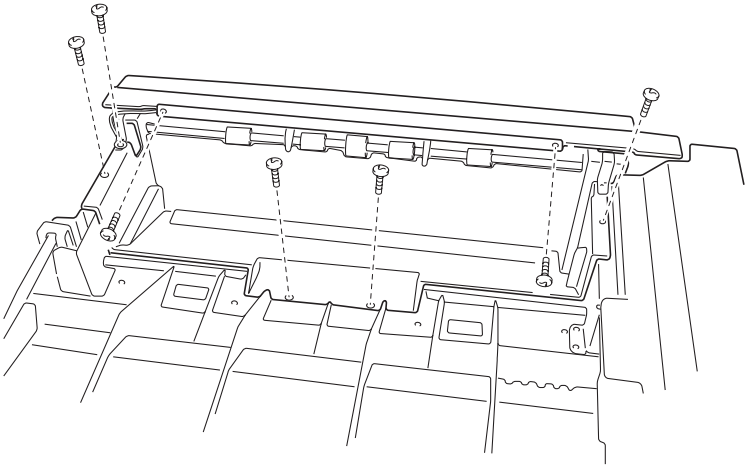

5. Remove the two screws of the motor from the face-down guide assembly. Remove the assembly.

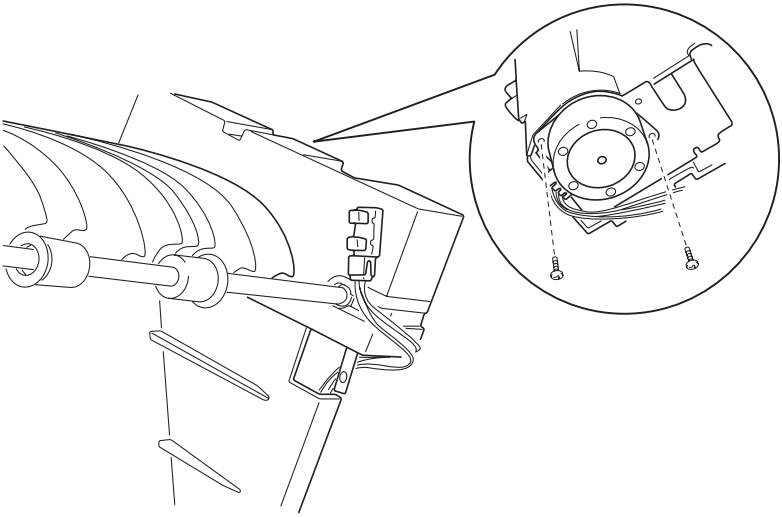

Note: When the motor is installed, press the motor 45 degrees in an upward direction when viewing from the rear.

6. Remove the face-down paper delivery full sensor from the face-down guide assembly.

Turn Guide Cover Sensor Removal

1. Open the top unit and remove the upper cassette, front cover, multi-purpose feeder, right side cover, and turn guide.
2. Remove the two screws from turn guide sensor, and remove the sensor.

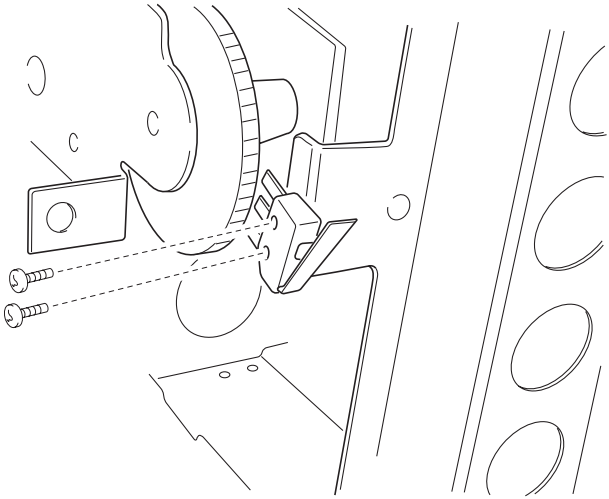

3. Remove the terminal.

Right Slide Rail Removal

1. Remove the upper cassette.
2. Remove the screw from both left and right slide rails.

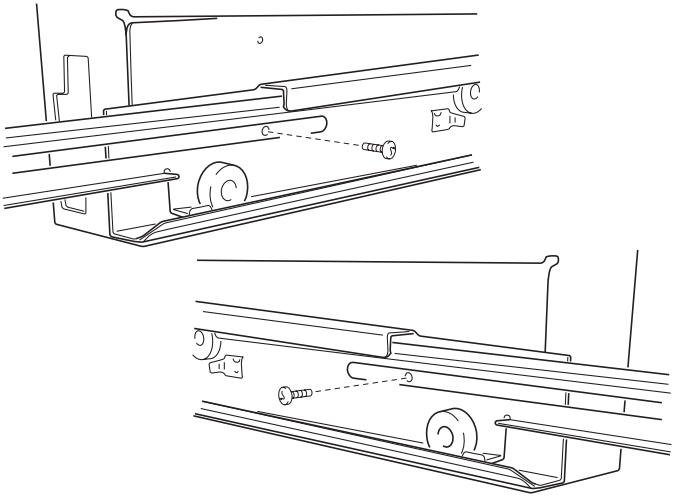

Front Cover Open Switch Actuator Removal

1. Open the front cover.
2. Remove the two screws from the front cover open switch actuator.

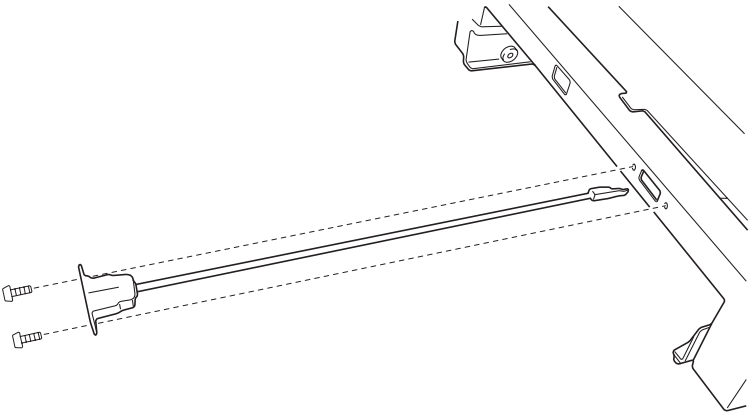

Lock Handle Assembly Removal

1. Open the top unit.
2. Turn the plastic latch on the front and rear sides by 90 degrees.
3. Remove the lock handle assembly.

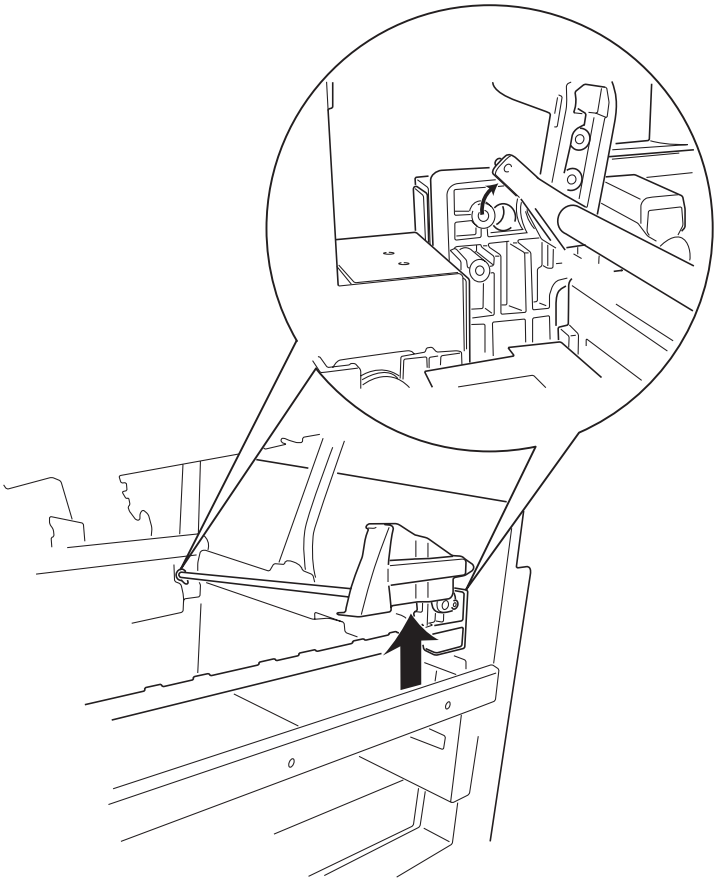

Top Unit Removal

1. Open the top unit and remove the top cover and face-down guide assembly.
2. Remove the screws and remove the top unit.

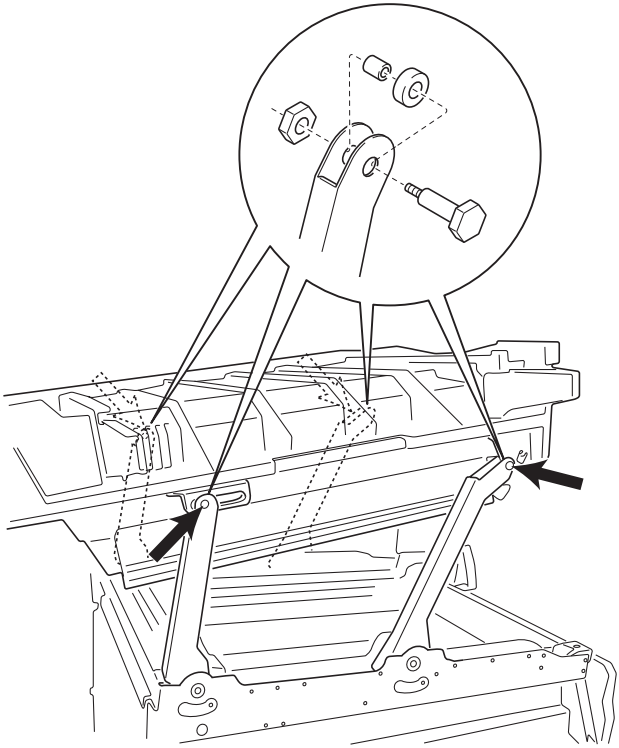

Stay Arm Removal

1. Open the top unit and remove the face-down paper guide assembly.
2. Remove the yellow and black sub frame.
3. Remove the screw and the screw from the right stopper, and remove the stopper.

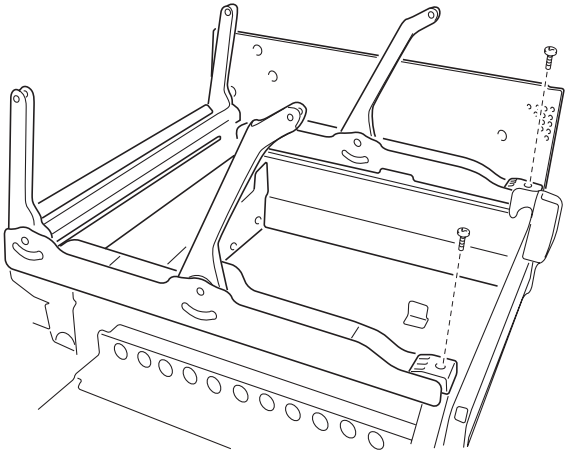

4. Remove the screw from the left stopper, and remove the stopper.
5. Remove the clip from the lock shaft.
6. Remove the 17 screws from the stay arm, and remove the arm.

Fuser Removal

1. Open the top unit.
2. Pushing the front and back lock, hold the handle, raise and remove the fuser.

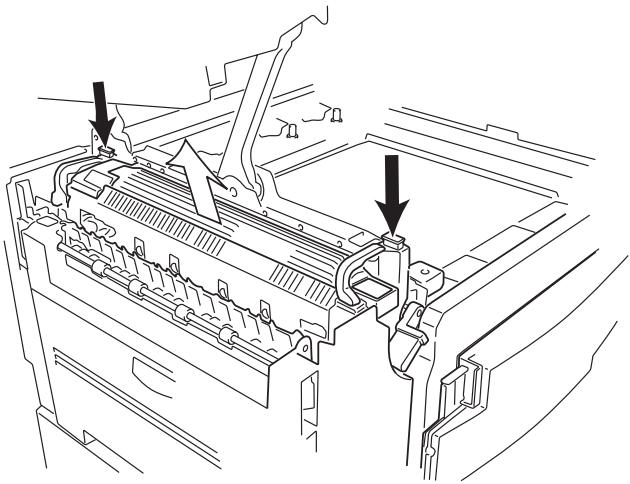

Options Removals

Expansion Paper Feeder Removal

1. Remove the cassette.
2. Remove the two screws from the front cover, removing the cover.
3. Remove the two screws from left side cover, and remove the cover.
4. Remove the two screws from right side cover A, and remove the cover.
5. Remove the two screws from right side cover B, and remove the cover.
6. Remove the screw from right side cover C, and remove the cover.
7. Remove the six screws from rear cover, and remove the cover.
8. Remove the turn guide. The cover is hinged in place.

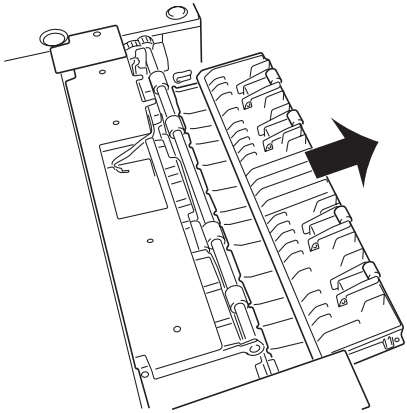

9. Remove the screw from paper the detection cover, and remove the cover.

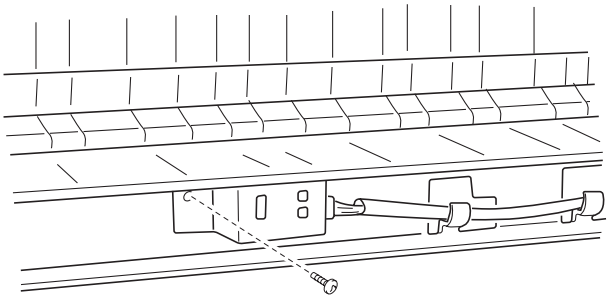

10. Remove the paper detection sensor.

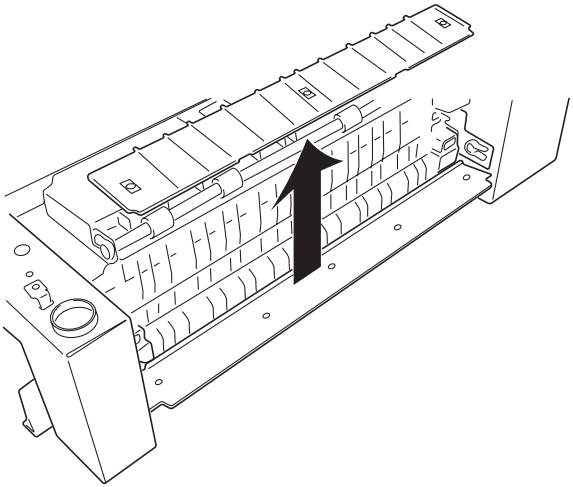

11. Remove the high capacity feeder guide. The cover is hinged in place.
12. Remove the screw from the paper feed roller assembly N5 from 4 positions, and remove the roller.

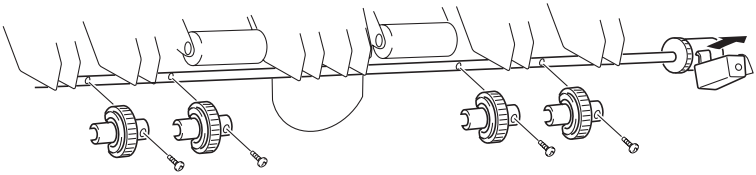

13. Remove the screw from the gear cover, and remove the cover.

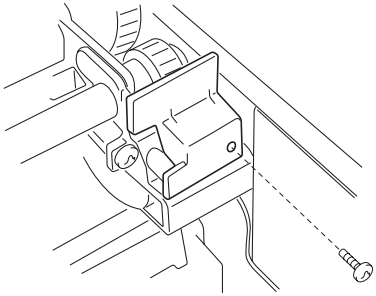

14. Remove the two screws from the paper carrying roller, and remove the roller.

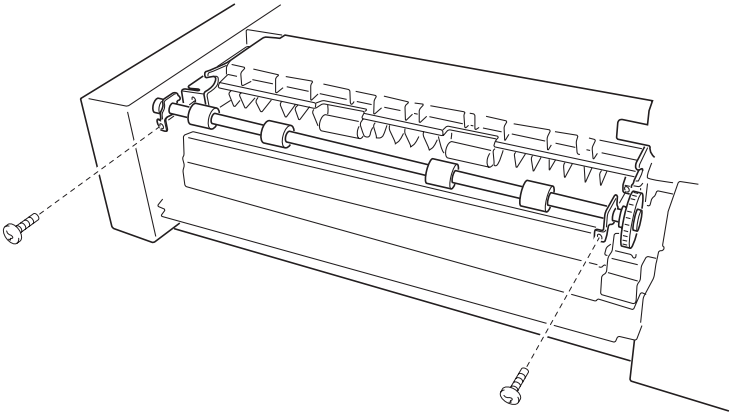

15. Remove the connector and remove the two screws from the drive motor, and remove the motor.

16. Remove the six screws from the drive assembly, and remove the assembly.

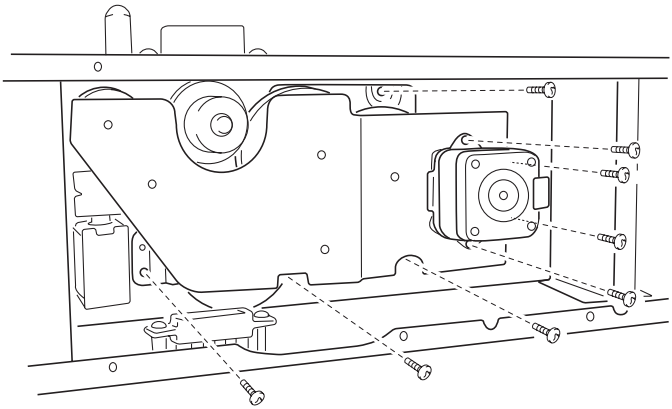

17. Remove the two screws from the paper remaining detection board, and remove the board.
18. Remove the four screws from the solenoid assembly, and remove the assembly.

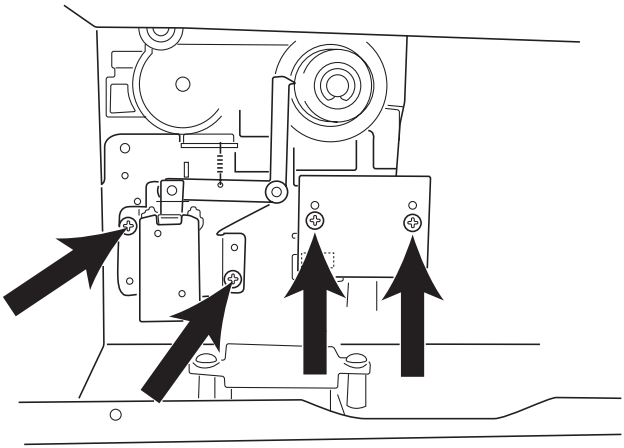

19. Remove the two bearings from the turn guide. The cover is hinged in place.

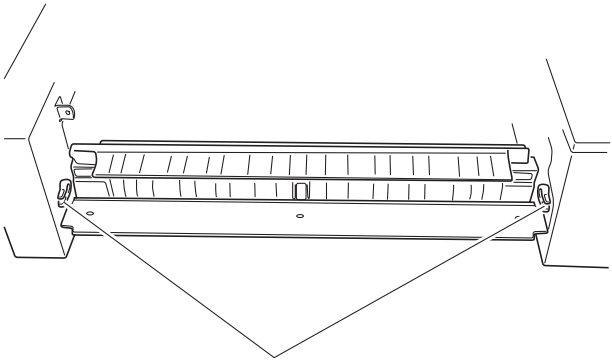

20. Remove the screw from the paper feed frame fuser plate, and remove the plate.

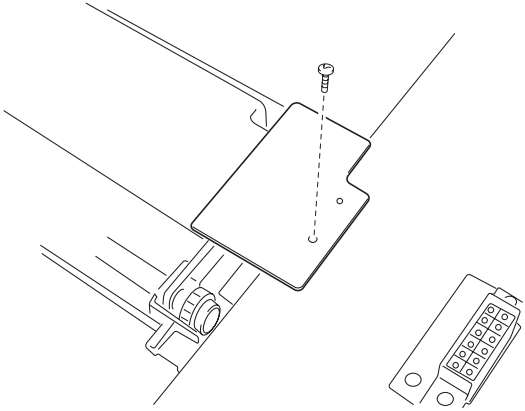

21. Remove the two screws from the fuser frame assembly, and remove the assembly.

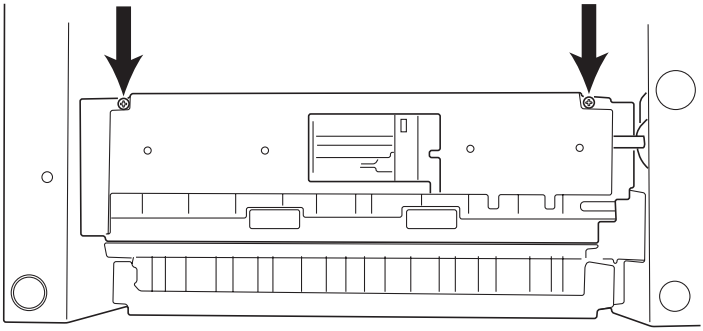

22. Remove the three screws from the cassette guide assembly, and remove the assembly.

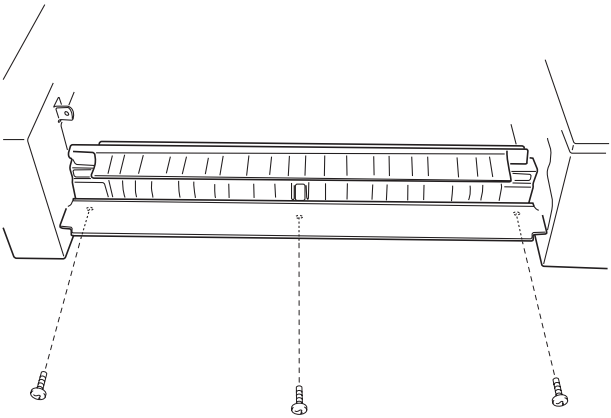

23. Remove the six screws from the second drive board assembly, and remove the assembly.

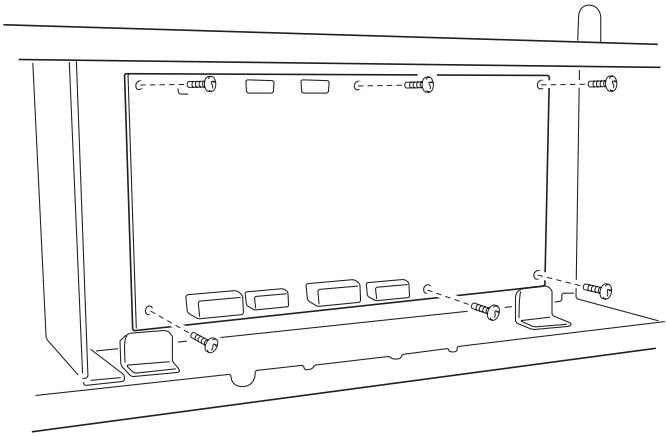

24. Remove the two screws from the paper size detection board, and remove the board.

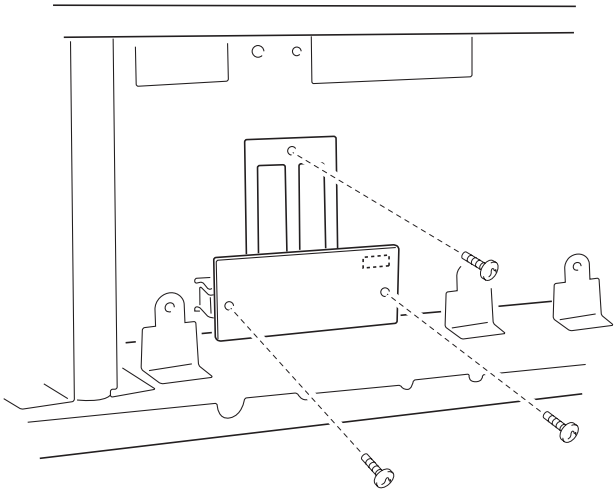

25. Remove the screw from the size detection lever spring, and remove the spring.
26. Remove the two screws from the connector plate, and remove the plate.
27. Remove the two screws from the upper drawer connector (male), and remove the connector.

28. Remove the two screws from the lower drawer connector (female), and remove the connector.

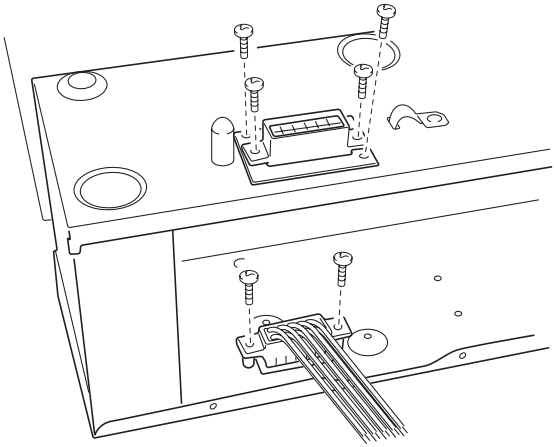

Duplex Unit Separation Removal

1. Remove the thumbscrews, C-clips, and screws as shown from both sides.

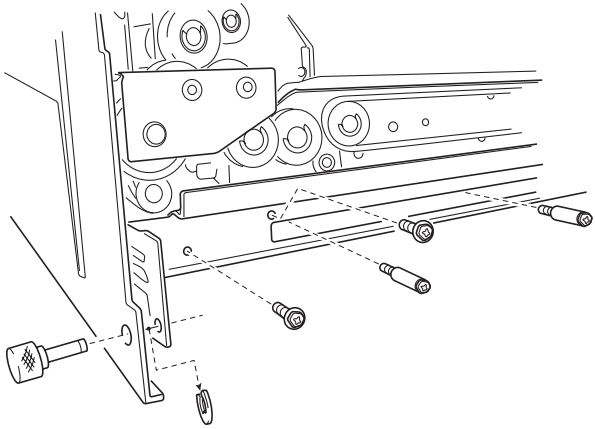

2. Remove the connectors and separate the duplex frame from the duplex unit.

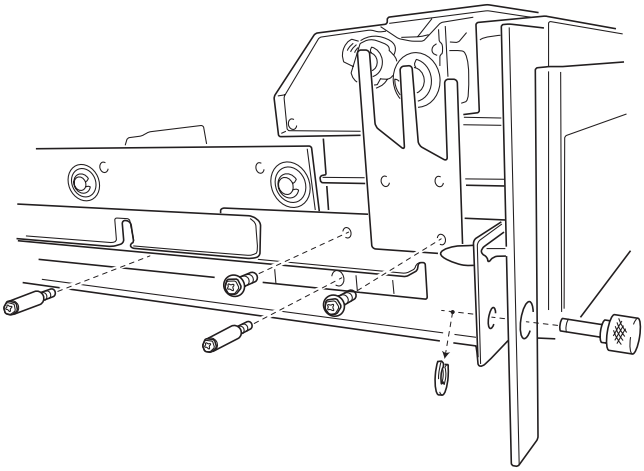

Duplex Unit Removal

1. Remove the four screws from the interface board, and remove the board.

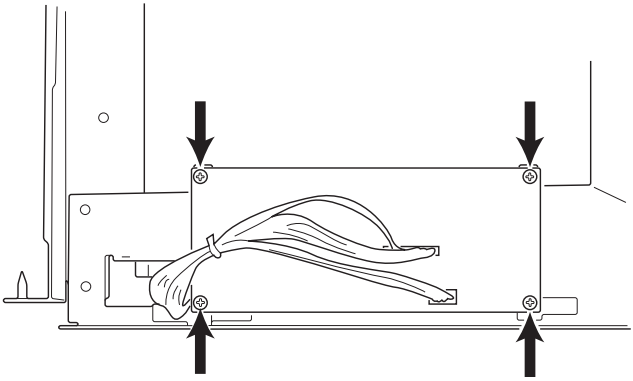

2. Remove the two screws from the duplex connector, and remove the connector.

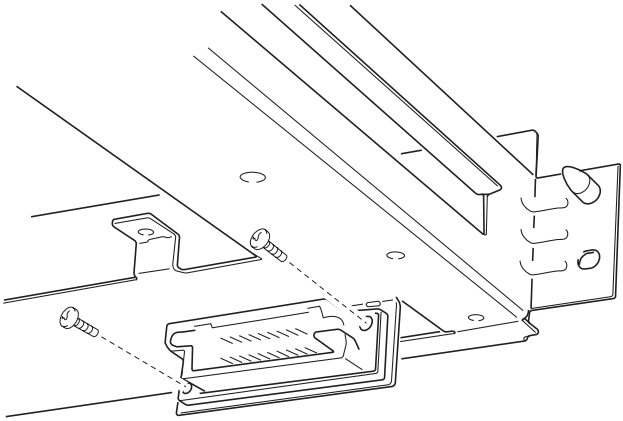

Duplex Timing Belt Removal

1. Remove the three C-clips from the three timing gears and remove the timing belts.
2. Remove the knob screw and remove the timing belt.

Duplex Pressure Roller and Solenoid Removal

1. Remove the two screws securing the pressure roll solenoid assembly.

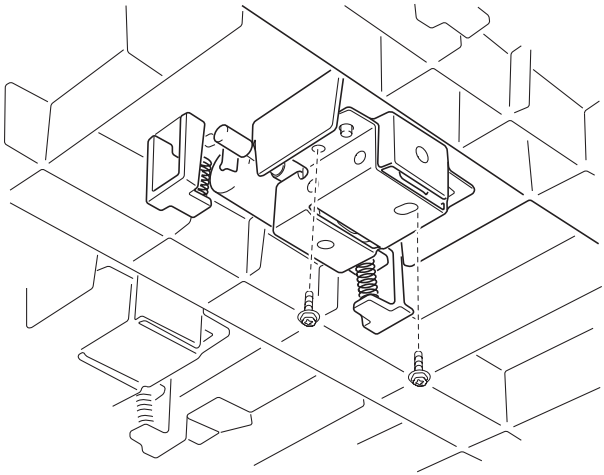

Duplex Feed Roller And Solenoid Removal

1. Remove the two screws securing the feed roll solenoid assembly.
2. Remove the pressure roller and springs.

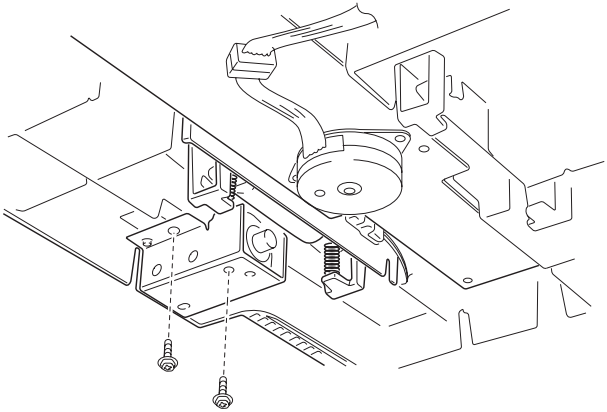

3. Remove the feed roller and springs.

Duplex Side Fence Motor Assembly / Side Fence Removal

1. Remove the three screws and remove the side fence motor assembly.

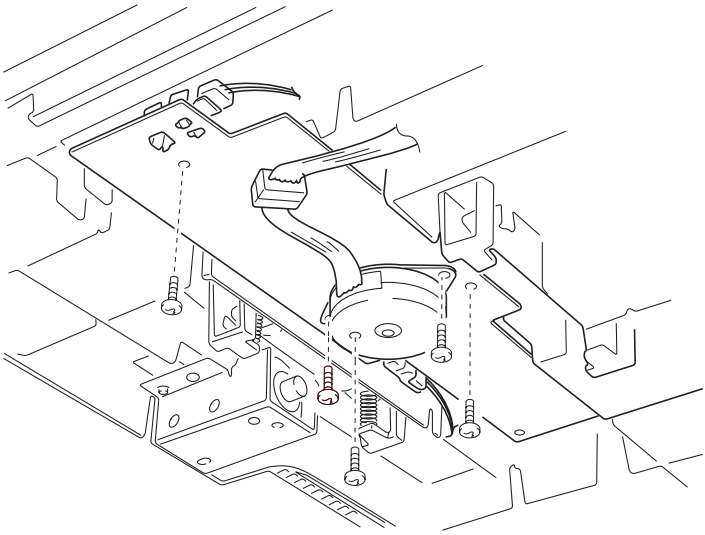

2. Remove the front and rear side fences.

Note: When installing, spread the front and rear side fences to the sides and install.

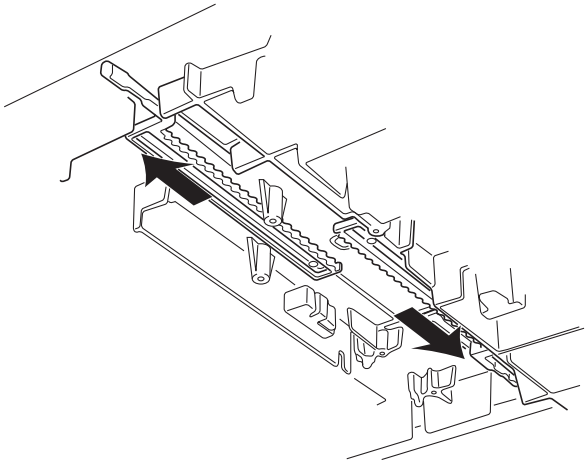

Duplex Paper Carrying Motor Removal

1. Remove the gear cover.
2. Remove the screws from the duplex paper carrying motor and remove the motor.

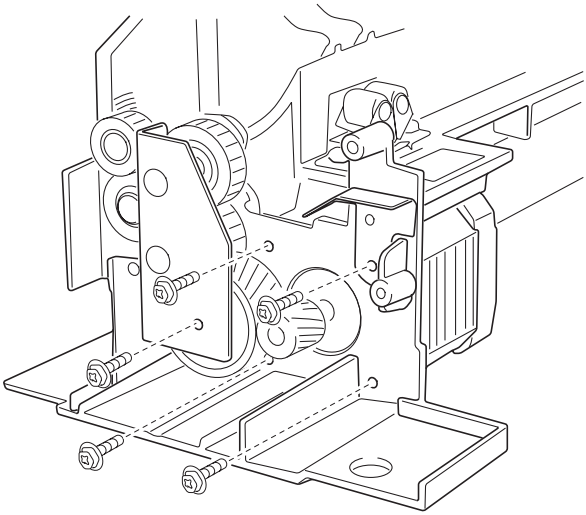

HCPF Covers Removal

1. Remove the two screws from the drive cover, and remove the cover.
2. Remove the front cover.
3. Remove the two screws from the right cover, and remove the cover.
4. Remove the top cover.
5. Remove the rear cover.
6. Remove the four screws from the transfer cover, and remove the cover.

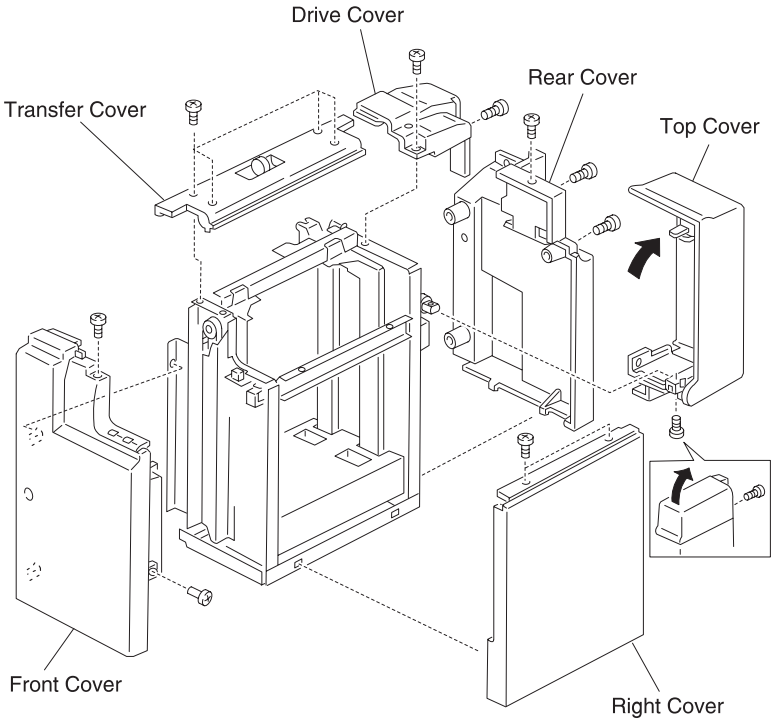

HCPF Call Roller, Paper Feed Roller, Reverse Roller Removal

1. Open the top cover on the tray.
2. Remove the two screws from the transfer cover, and remove the cover.
3. Remove the retaining rings on the rollers, and remove the rollers.

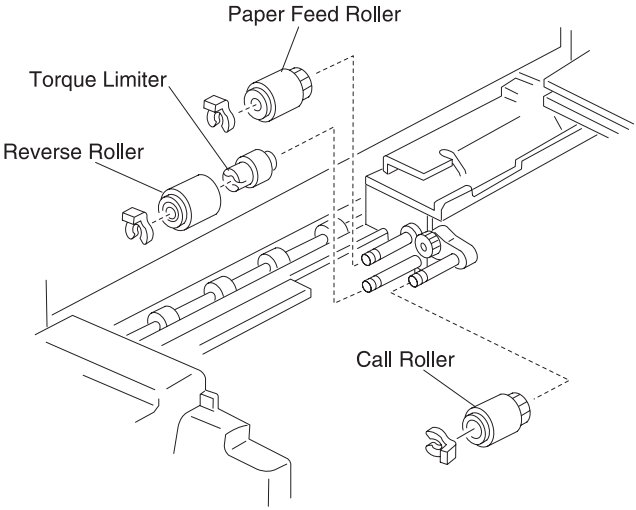

HCPF Pickup Solenoid Removal

1. Remove the four screws from the transfer cover, and remove the cover.
2. Remove the two screws from the drive cover, and remove the cover.
3. Remove the screw from the clamp plate, and remove the plate.
4. Remove the connector and the two screws from the pickup solenoid, and remove the solenoid.

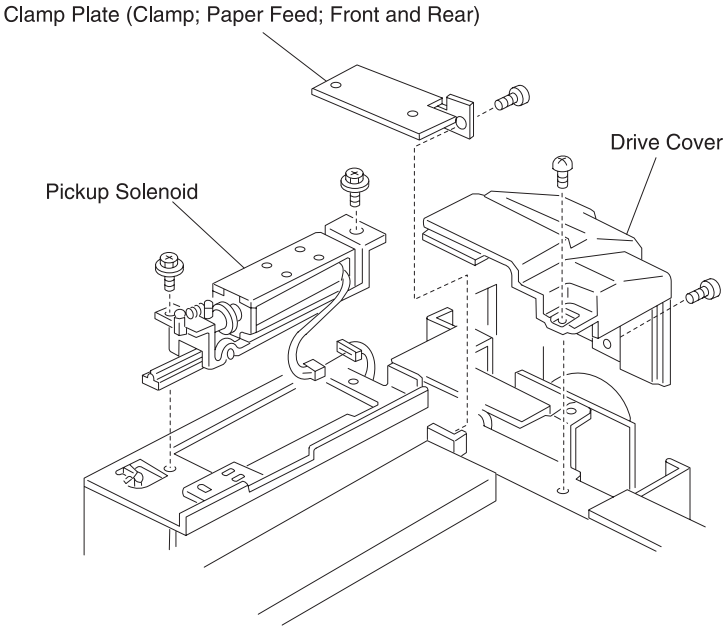

HCPF Paper End Sensor Removal

HCPF Paper Size Sensors (1, 2) Removal

1. Cover the paper level sensor with your hand and press the down button. The tray moves down. Lower the tray until the down sensor turns on.
2. Remove the front cover and transfer cover.
3. Remove the two screws on the front and rear sides of the side fence.
4. Mark the locking position of the side fence locking stay.
5. Remove the two screws on the side fence locking stay.
6. Remove the screw and connector from paper end sensor, and remove the sensor.
7. Remove the screw and connector from the clamp plane and remove the paper size sensors 1 and 2.

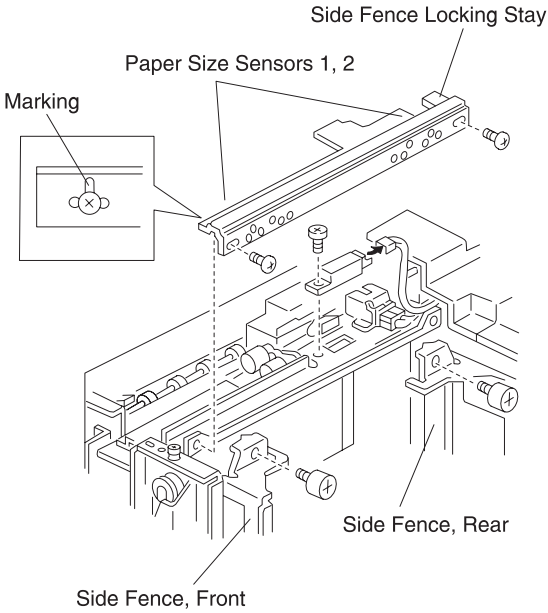

Notes:

- To prevent damage to the stay, hold the stay when removing the sensors.
- Be sure the side registration is not shifted, which may occur with the dismounting and mounting of the locking stay. If it is shifted, relocate the stay toward the front or rear to adjust.

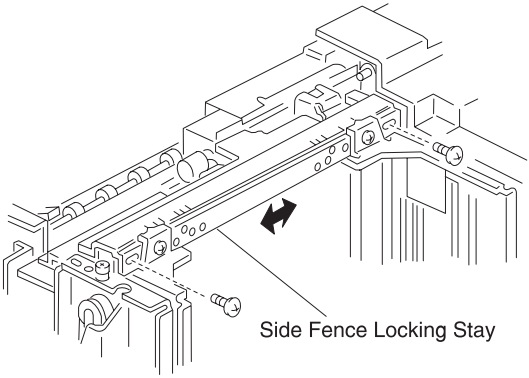

8. Remove the top cover switches.

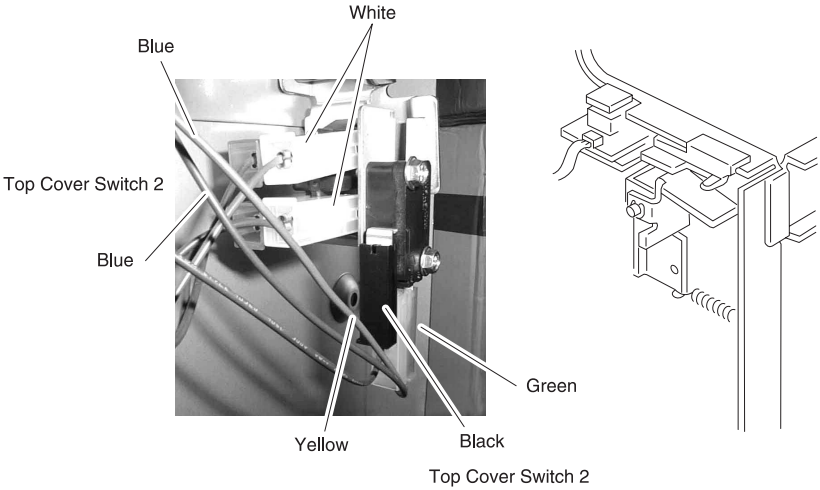

HCPF Tray Motor Removal

1. Remove the rear cover and the drive cover.
2. Remove the two screws of the tray motor, and remove the motor.

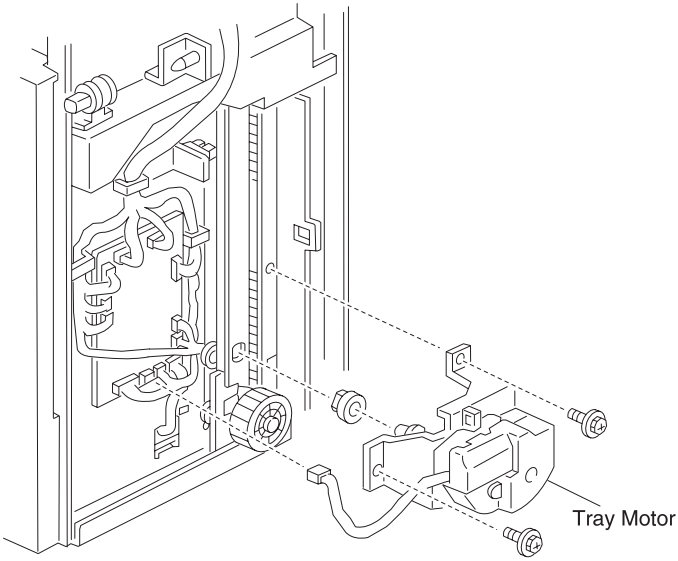

HCPF Paper Level Sensor Removal

1. Remove the four screws from the transfer cover, and remove the cover.
2. Remove the two screws from the sensor, and remove the cover.
3. Remove the connector and screw from paper level sensor, and remove the sensor.

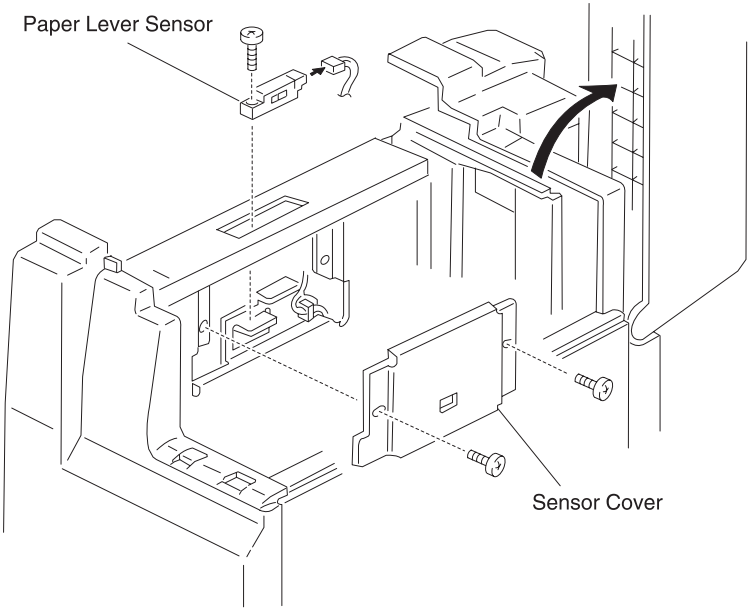

HCPF Power Supply Removal

1. Move the paper tray upward.
2. Disconnect the power cord.
3. Remove the front cover.
4. Remove the two screws from the power supply cover, and remove the cover.
5. Remove the four screws from the power supply unit and remove the unit.
6. Remove the two screws from the DC-DC converter, and remove the converter.

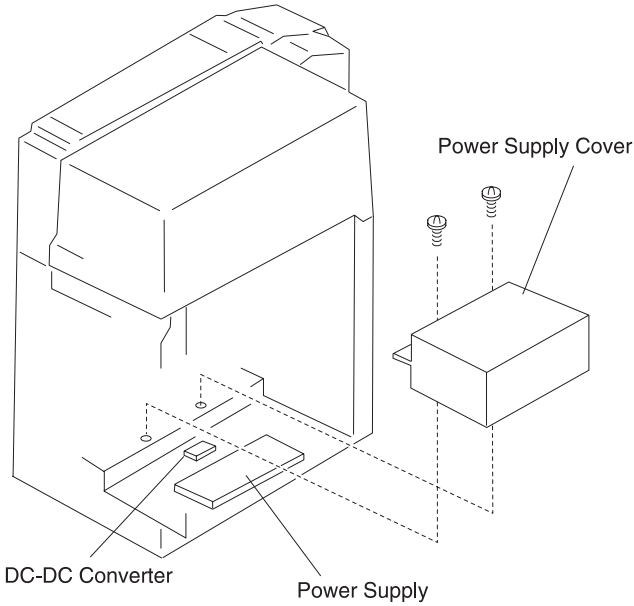

5. Locations

Covers Diagram

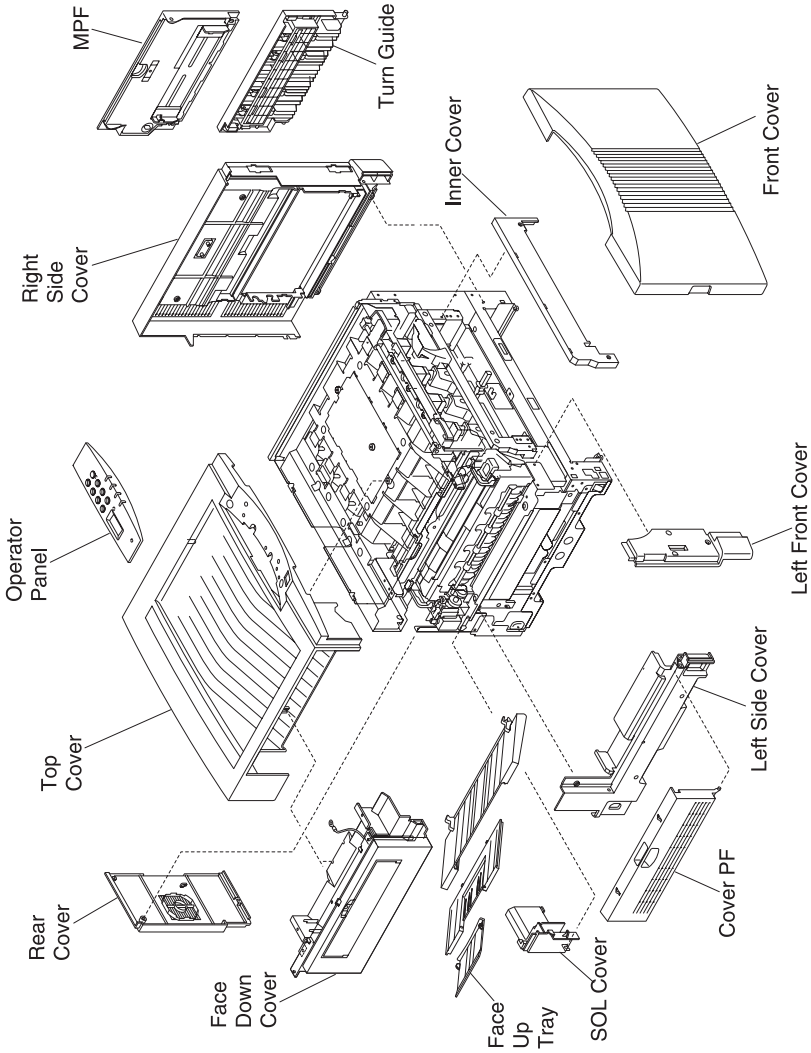

Major Parts Diagram

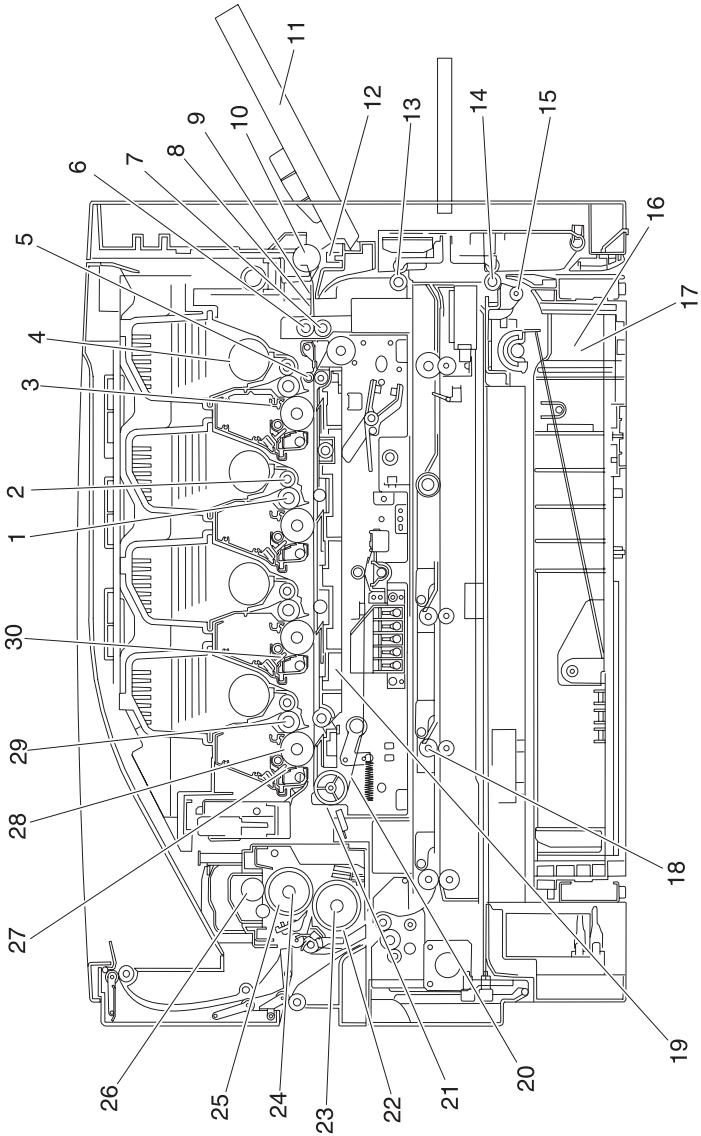

	Part		Part
1	Development Roll	16	Paper Out Detection Lever
2	Supply Roll	17	Paper Out Detection Sensor
3	Doctor Blade	18	Duplex Unit
4	Agitator	19	Transfer Sheet
5	Absorption Roll	20	Transfer Belt
6	Registration Upper Roll	21	Belt Drive Roller
7	Registration Lower Roll	22	Paper Delivery Detection Lever
8	Registration Sensor	23	Press Roll
9	Registration Detection Lever	24	Heater
10	MPF Roll	25	Fuser Roller
11	MPF Unit	26	Oil Coating Roller
12	Fanning Pad	27	Cleaning Blade
13	Upper Feed Roll	28	Photosensitive Drum
14	Lower Feed Roll	29	Charged Roll
15	Paper Feed Roll	30	LED Head

Printer Controller Board

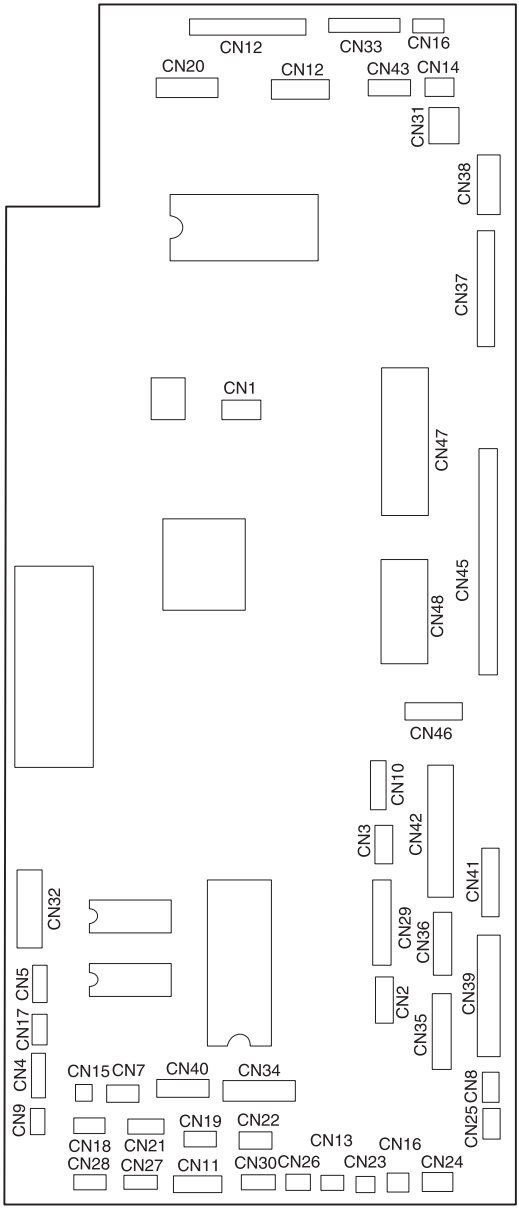

Printhead Controller Board

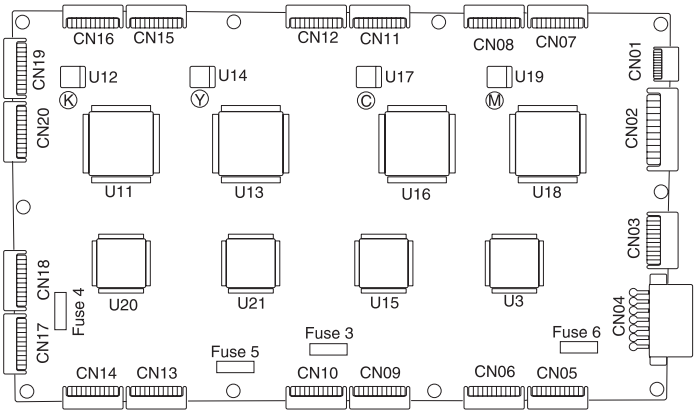

RIP Board

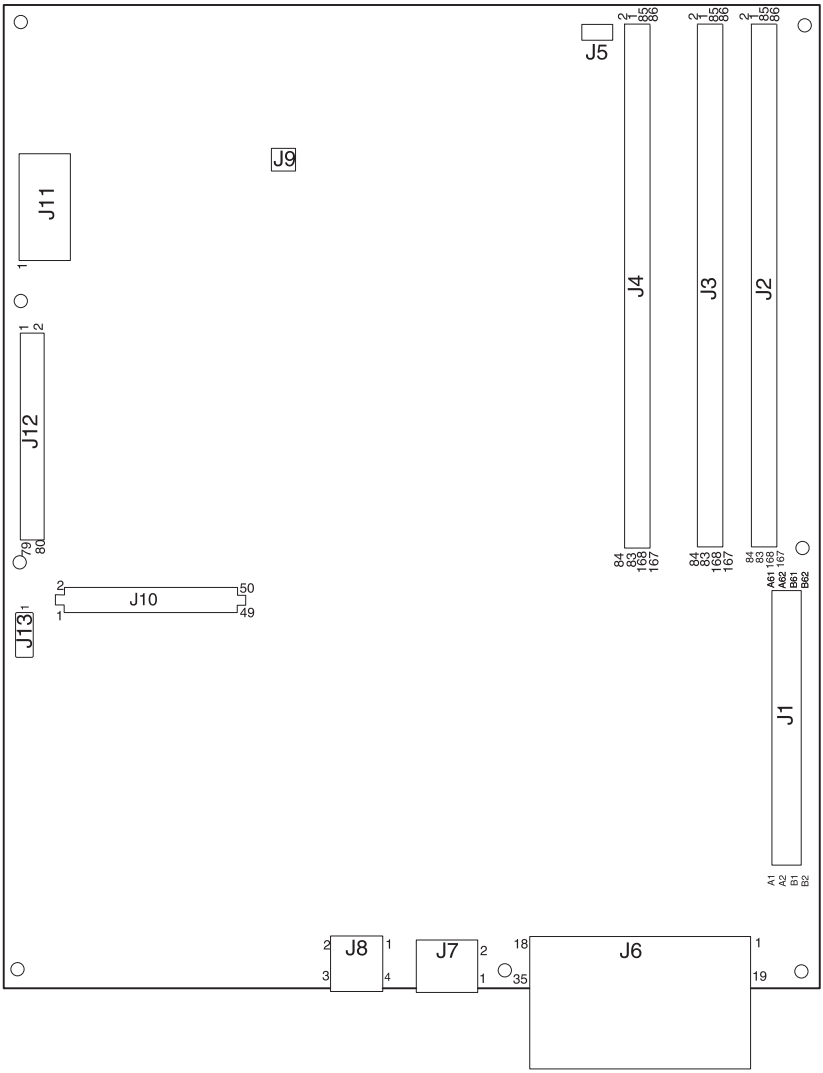

Power Source Unit 1 Board

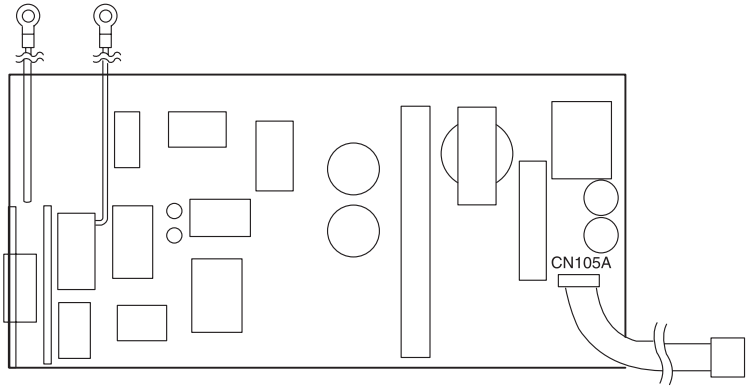

Power Source Unit 2 Board

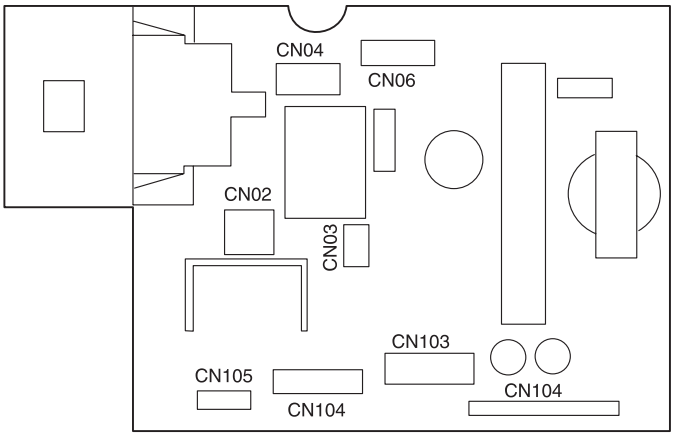

High Voltage Power Supply Board

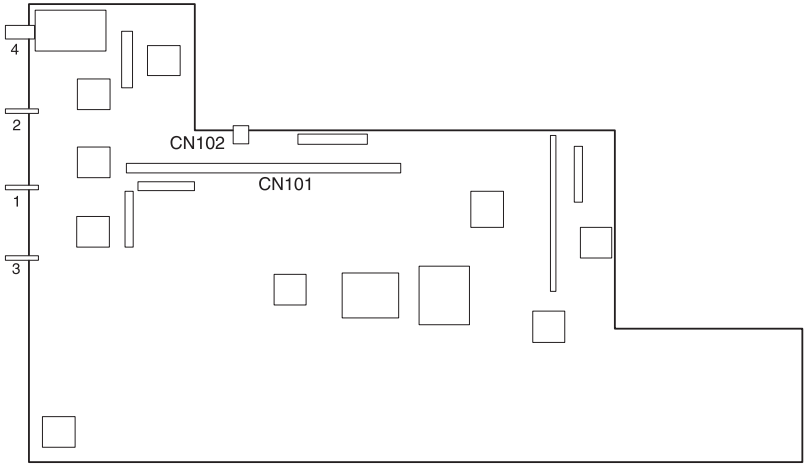

Sensor Board

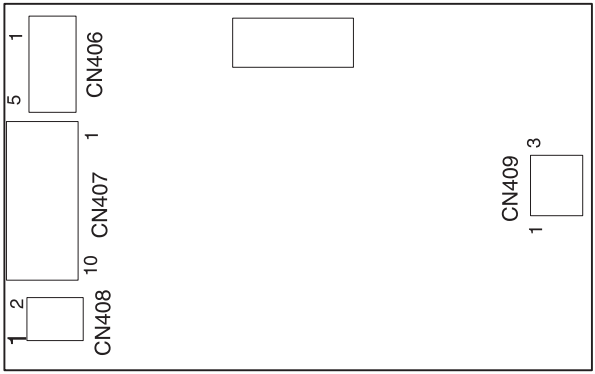

Expansion Paper Feeder Controller Board

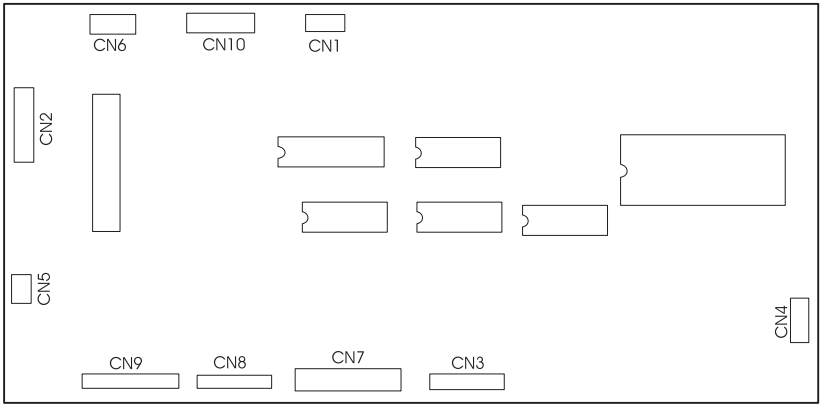

Duplex Unit Controller Board

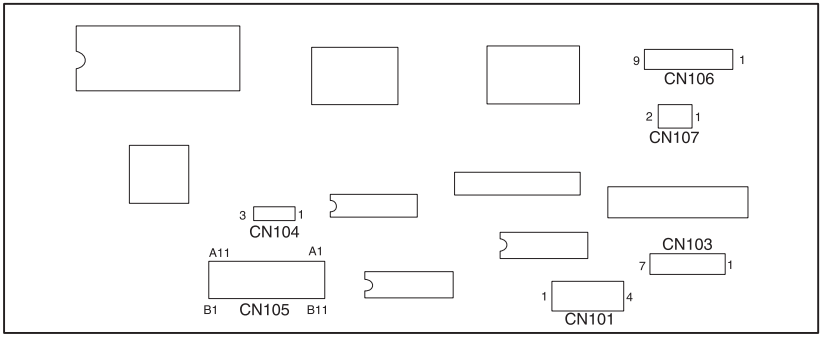

Motor Drive Board

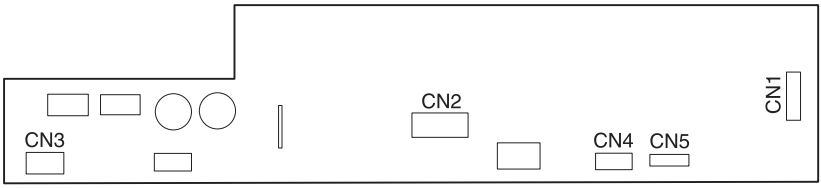

Size Sensor Board

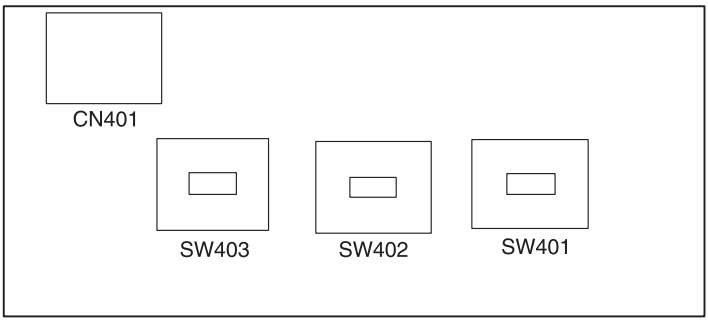

High Capacity Paper Feed (HCPF)

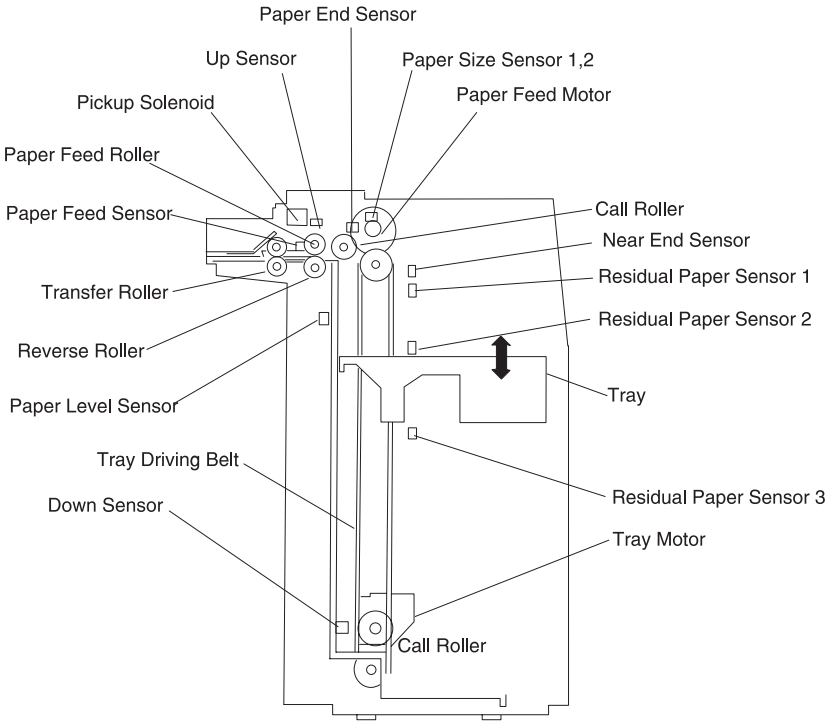

High Capacity Paper Feed Configuration

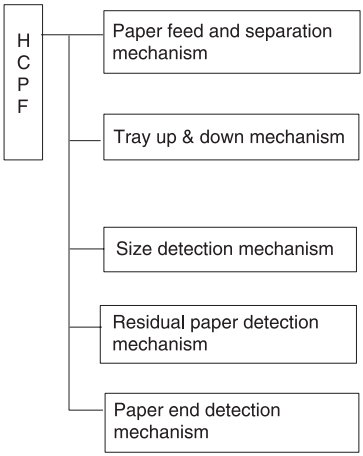

Friction roller separation system with a non-contact magnet type maintenance-free torque limiter.

Tray elevating system consisting of a tray motor and a timing belt.

Fixed to the side fence, and size is entered from the printer.

Tray level is detected with the fillers and photo interrupters (4 pieces).

A reflection type sensor on the upper stay detects the paper.

Electrical Parts Layout

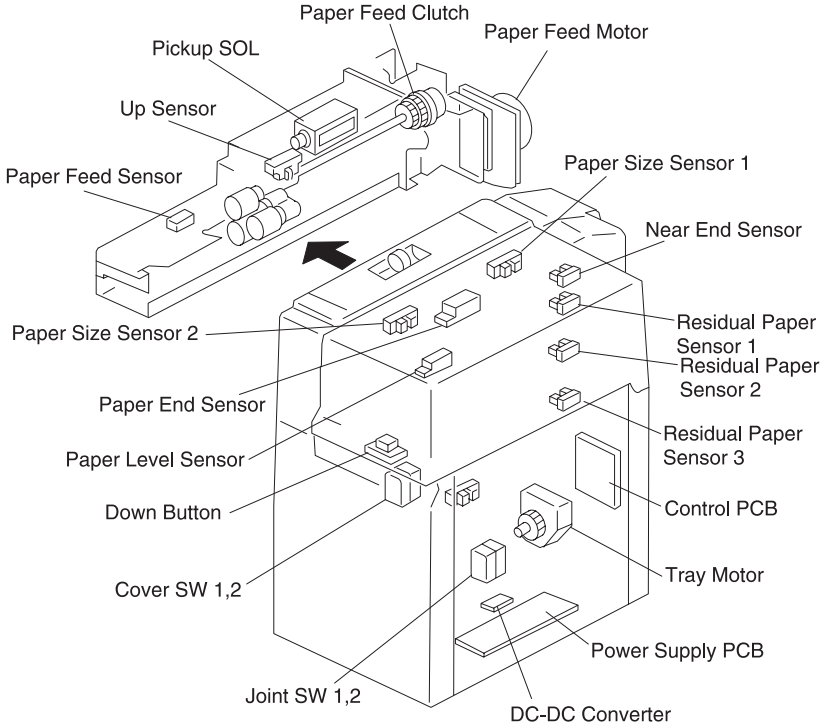

Driving Parts Layout

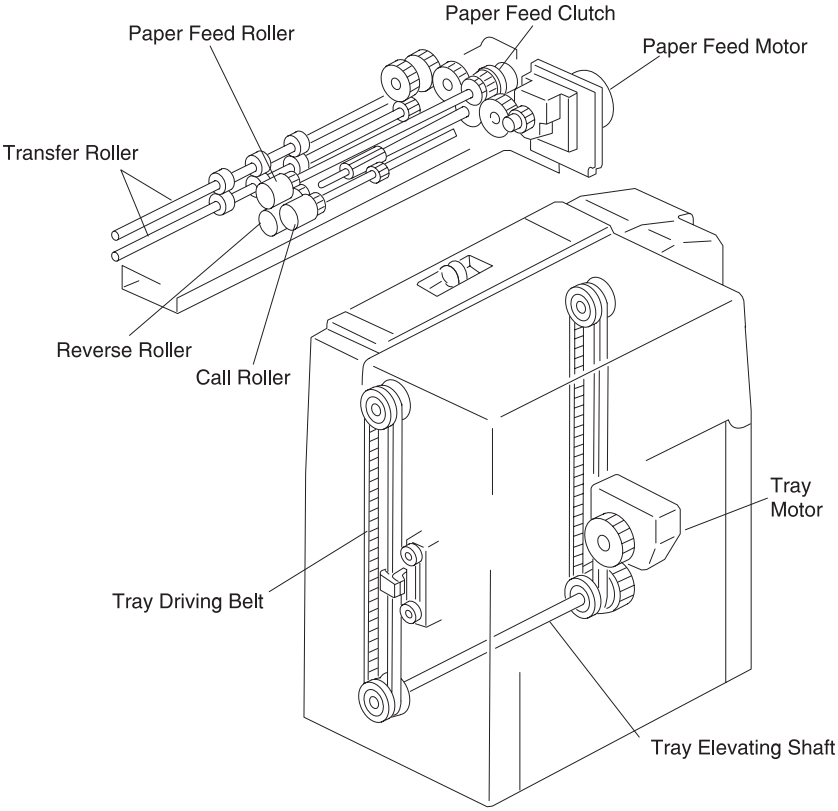

Sensor and Switch Locations

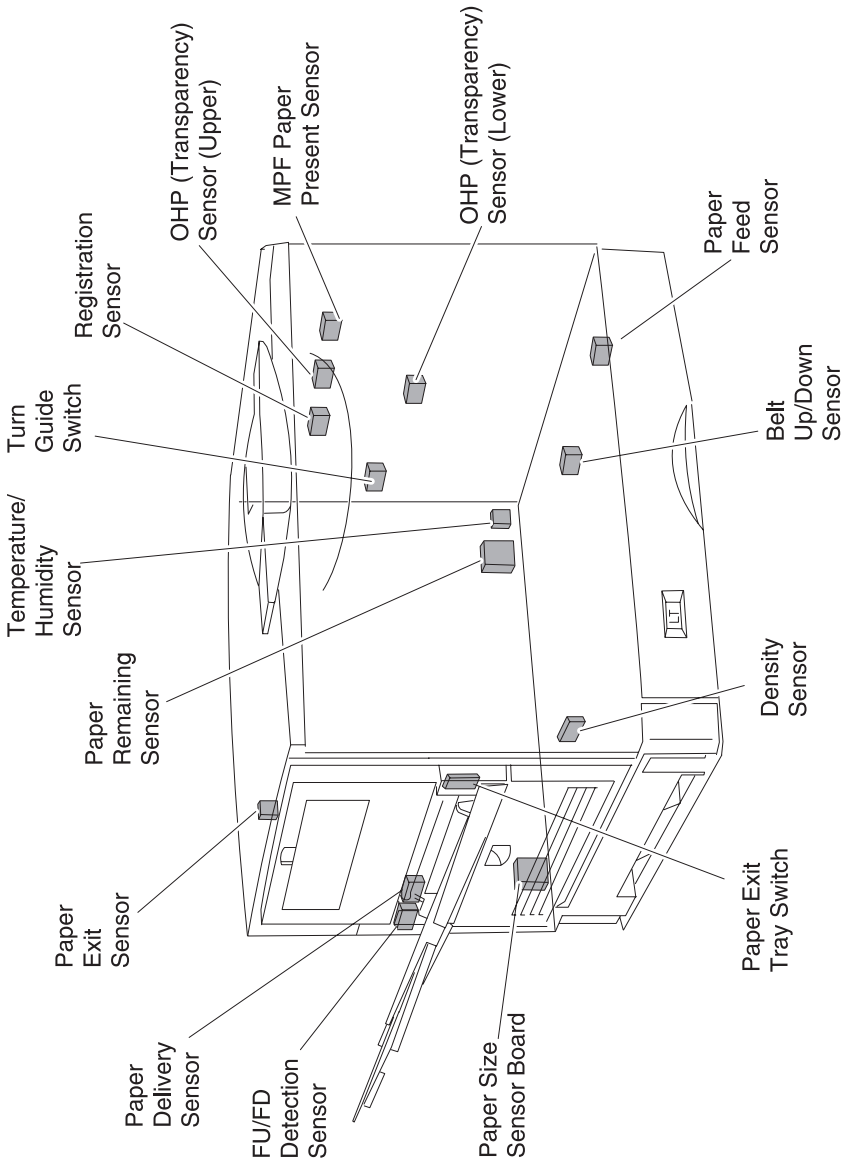

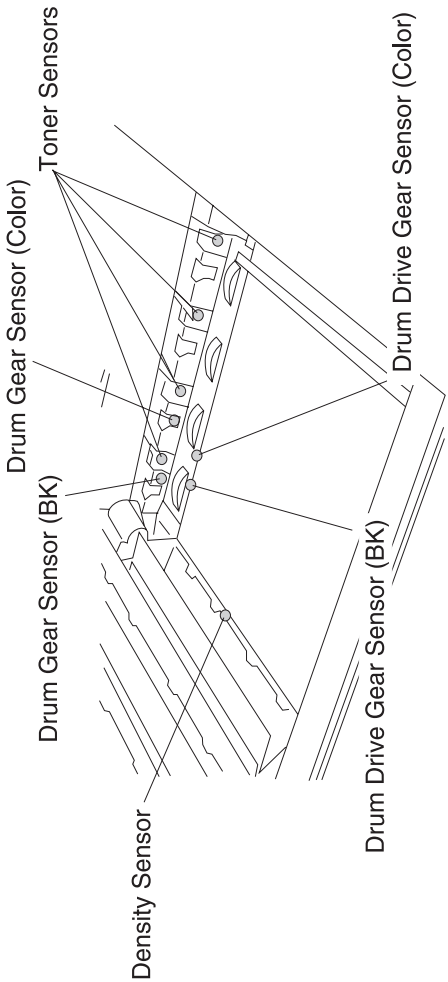
Toner Sensors
Drum Gear Sensor (Color)
Drum Gear Sensor (BK)
Density Sensor
Drum Drive Gear Sensor (Color)
Drum Drive Gear Sensor (BK)

Component Locations

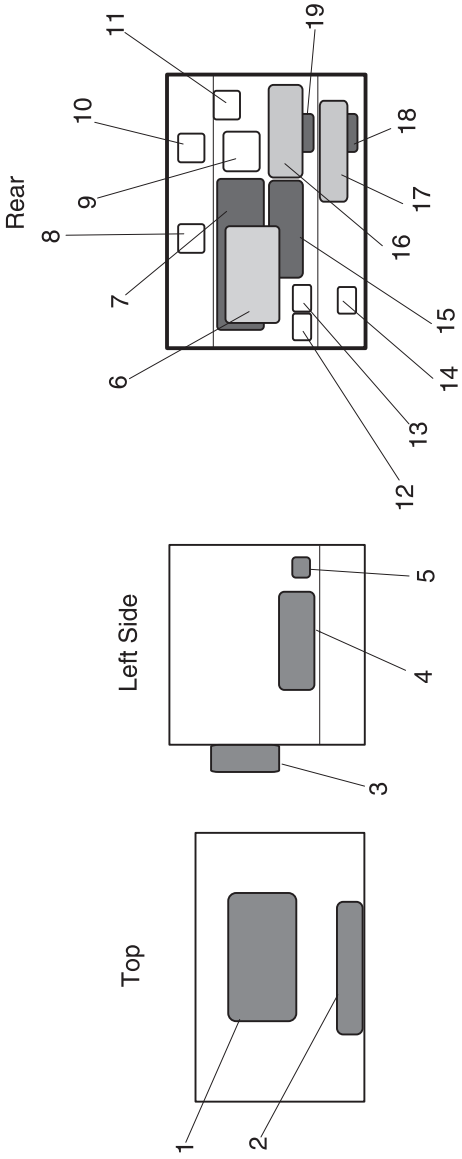

Number	Component
1	Printhead Controller Board
2	Operator Panel
3	RIP Box
4	Motor Driver Board
5	Power Switch
6	Printer Controller Board
7	High Voltage Unit (HVU)
8	Upper Left Fan
9	Main Drive Motor
10	Upper Right Fan
11	Power Supply Fan
12	Temperature/Humidity Sensor
13	Paper Remaining Detection Sensor (Main Unit)
14	Paper Remaining Detection Sensor (Expansion Feeder)
15	Power Supply 2
16	Power Supply 1
17	Expansion Feeder Control Board
18	Paper Size Sensor Board (Expansion Feeder)
19	Paper Size Sensor Board (Main Unit)

6. Preventive Maintenance

Maintenance Kit

When nearing the end-of-life of the fuser or transfer belt, the following message appears on the printer display, indicating that it's time to replace the fuser unit and/or transfer belt unit:

80 Belt Life Warning and/or **80 Fuser Life Warning**

Routine replacement of these parts ensures peak printer performance and helps prevent print quality problems and paper feed problems resulting from worn parts. The parts are contained in the maintenance kits listed below.

Maintenance Kit P/N	Unit	Printer Power Supply
56P9903	Transfer Belt	115 V - 230 V
56P9900	Fuser	115 V
56P9901	Fuser	230 V

The status message appears on the display until the appropriate part(s) is replaced.

Periodic Maintenance

This table lists the parts to be periodically cleaned by the servicer.

Part Name	Method
Paper Feed Unit: • Paper Feed Roller • MPF Roll	Remove any dust or dirt, and wipe the surface lightly with a dry cloth. If it is still dirty, clean with a soft cloth and alcohol.
Registration Unit: Registration Roller, Upper and Lower	Remove any dust or dirt, and wipe the surface lightly with a dry cloth. If it is still dirty, clean with a soft cloth and alcohol.
Charge/Exposure Unit: LED Head	Remove any dust or dirt, and wipe the surface lightly with a dry cloth. If it is still dirty, clean with a soft cloth and alcohol.
Transfer Unit: Transfer Belt	Remove any dust or dirt, and wipe the surface lightly with a dry cloth. If it is still dirty, clean with a soft cloth and alcohol.
Fuser Unit: Heat Rollers	Clean with a soft cloth, silicon oil, or alcohol.
Outer Covers	Use a synthetic detergent and a damp cloth.

Lubricants and Cleaners

Lubricating	Cleaning
• Oil - #10 Apply between gears and shafts • Grease - # 23 Apply to gears.	Alcohol or Isopropyl on plastic, rubber, and external parts.

7. Parts Catalog

How to Use This Parts Catalog

- SIMILAR ASSEMBLIES: If two assemblies contain a majority of identical parts, they are shown on the same list. Common parts are shown by one index number. Parts peculiar to one or the other of the assemblies are listed separately and identified by description.
- NS: (Not Shown) in the Asm-Index column indicates that the part is procurable but is not pictured in the illustration.

Assembly 1: Covers 1

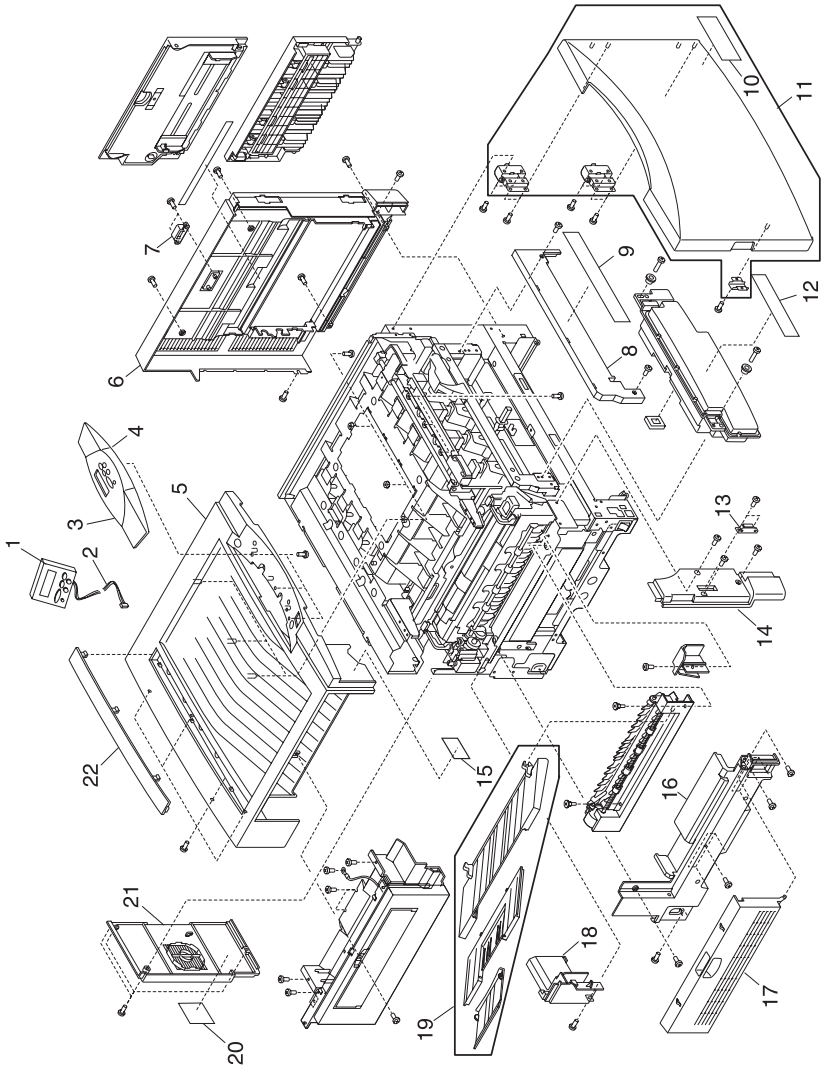

Asm-Index	Part Number	Units	Description
1 - 1	12G7360	1	Board, Operator Panel
2	56P9736	1	Cable, Operator Panel
3	56P9555	1	Housing, Upper Operator Panel
4	56P9556	1	Housing, Lower Operator Panel
5	56P9539	1	Cover, Top
6	56P9533	1	Cover Assembly, Right Side
7	56P9534	1	Magnet, Right Side Latch
8	56P9540	1	Cover, Waste Toner Bottle
9	56P9545	1	Label, Operator Guide
10	56P9549	1	Label, Model/Name
11	56P9532	1	Cover Assembly, Front
12	56P9548	1	Label, Jam Removal
13	56P9543	1	Magnet, Front Cover Latch
14	56P9542	1	Cover, Left Front
15	56P9550	1	Label, Consumable
16	56P9536	1	Cover, Left Side
17	56P9537	1	Cover, Paper Feed
18	56P9535	1	Cover, Solenoid
19	56P9531	1	Tray Assembly, Exit
20	56P9546	1	Label, Voltage 120
20	56P9547	1	Label, Voltage 230
21	56P9538	1	Cover, Rear
22	56P9551	1	Cover, Adjustment
NS	56P9544	1	Label, MPT
NS	56P9554	3	Core, Ferrite
NS	56P9905	1	Kit, Operator Panel Overlay

Assembly 2: Covers 2

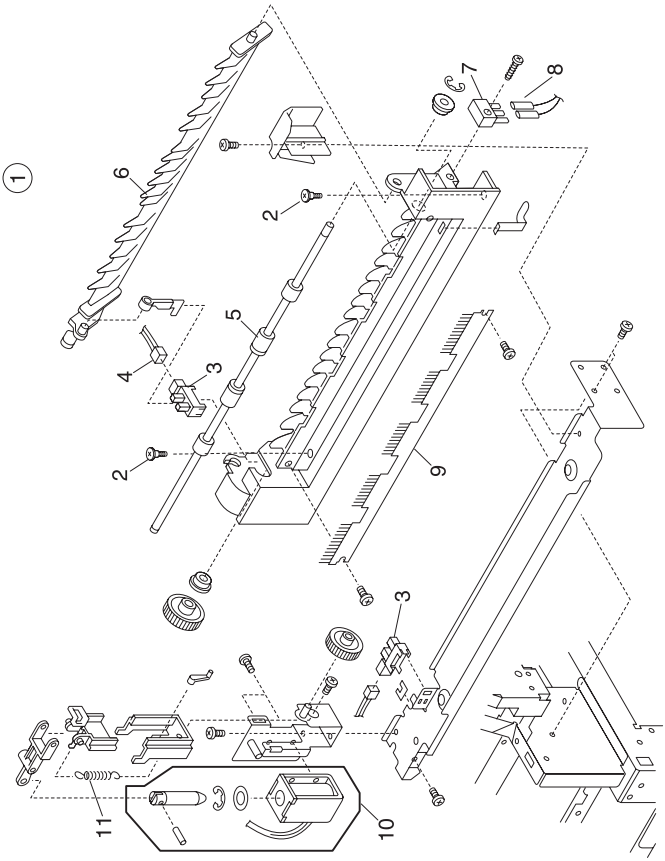

Asm-Index	Part Number	Units	Description
2 - 1	56P9557	1	Exit Assembly, Face-Up
2	56P9558	2	Screw, Stopper
3	11G0243	2	Interrupter, Photo
4	56P9564	1	Cable, Face-Up Sensor
5	56P9559	1	Roller, Paper Exit
6	56P9561	1	Deflector, Face-Up
7	56P9502	1	Switch, Paper Exit Tray
8	56P9565	1	Cable, Paper Exit Switch
9	56P9560	1	Brush, Face-Up Static Discharge
10	56P9563	1	Solenoid Assembly, Face-Up Deflector
11	56P9562	1	Spring, Face-Up Deflector

Assembly 3: Covers 3

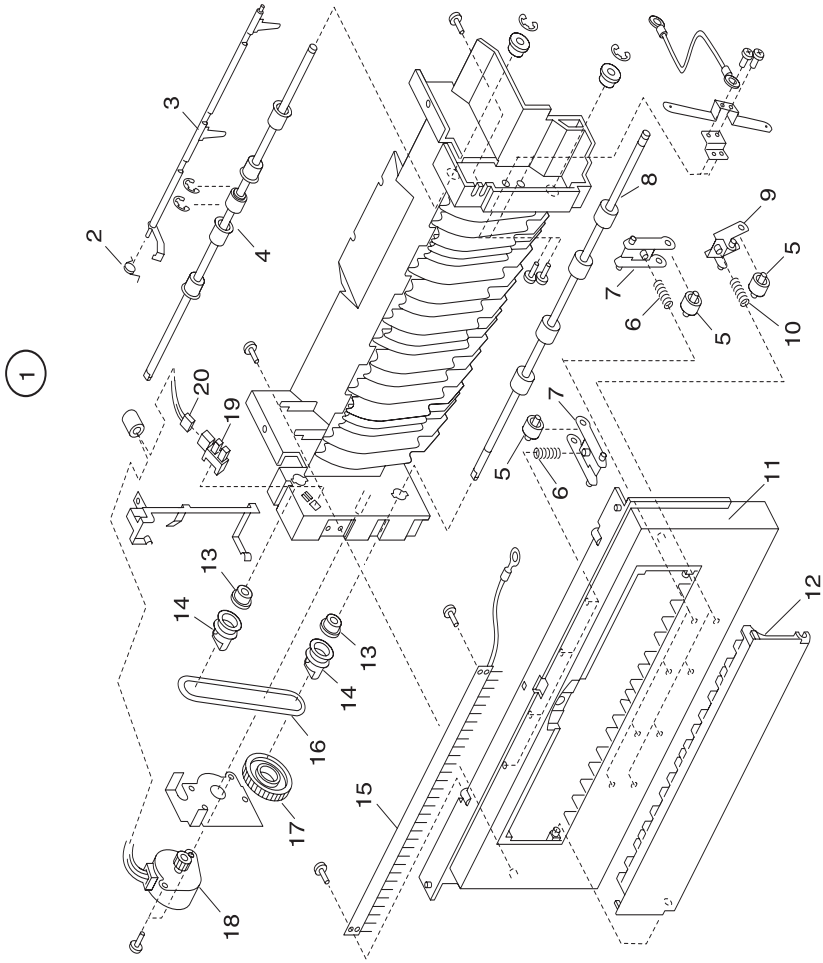

Asm-Index	Part Number	Units	Description
3 - 1	56P9566	1	Guide Assembly, Face-Down
2	56P9572	1	Spring, Face-Down Paper Full
3	56P9573	1	Lever, Face-Down Paper Full
4	56P9574	1	Roller, Face-Down Upper Feed
5	11G0135	8	Roller, Face-Down Pinch
6	56P9568	8	Spring, Face-Down Pinch Roller
7	56P9569	8	Arm, Face-Down Pinch Roller
8	56P9577	1	Roller, Face-Down Lower Feed
9	56P9571	4	Arm, Face-Down Lower Pinch Roller
10	56P9570	4	Spring, Face-Down Lower Pinch Roller
11	56P9583	1	Cover, Face-Down
12	56P9567	1	Door, Face-Down Jam Access
13	56P9575	4	Bushing, Face-Down Pinch Roller
14	56P9576	2	Pulley, Face-Down Feed Roller
15	56P9582	1	Brush, Face-Down Static Discharge
16	56P9578	1	Belt, Face-Down Roller
17	56P9579	1	Gear, Face-Down Roller Drive
18	56P9580	1	Motor, Paper Exit
19	11G0219	1	Interrupter, Photo
20	56P9581	1	Cable Assembly, Exit Sensor

Assembly 4: Covers 4

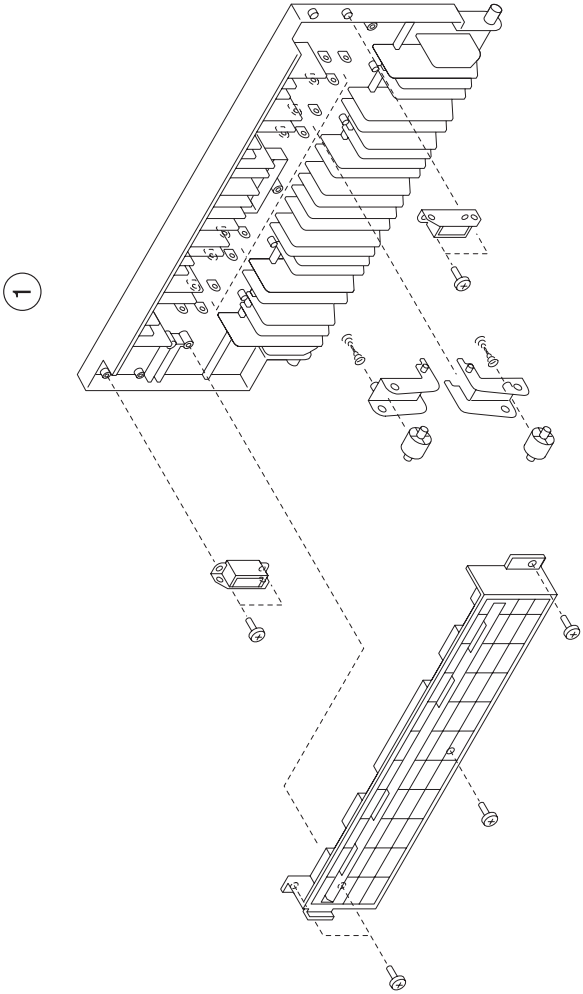

Asm-Index	Part Number	Units	Description
4 - 1	56P9584	1	Guide Assembly, Turn

Assembly 5: Covers 5

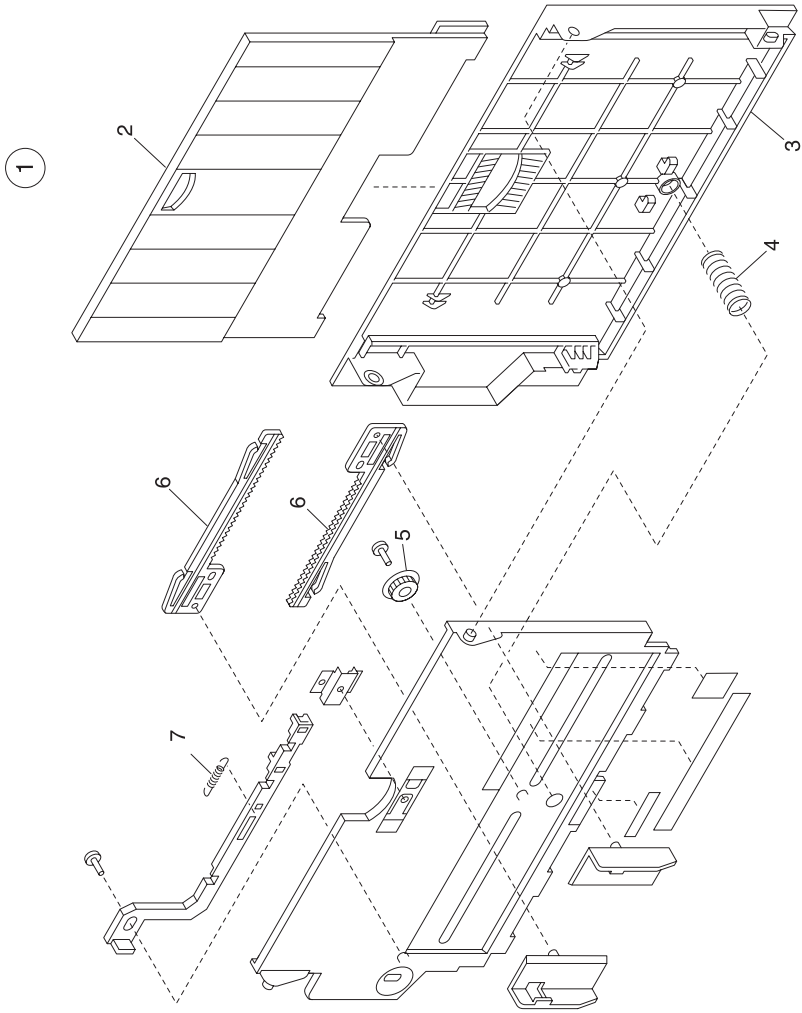

Asm-Index	Part Number	Units	Description
5 - 1	56P9587	1	Feeder Assembly, Multi-Purpose
2	56P9589	1	Extender, MPF
3	56P9588	1	Cover, MPF
4	56P9590	1	Spring, MPF
5	11G0118	1	Pinion, MPF
6	11G0117	1	Rack, MPF
7	11G0120	1	Spring, Feeder Lock

Assembly 6: Upper Unit

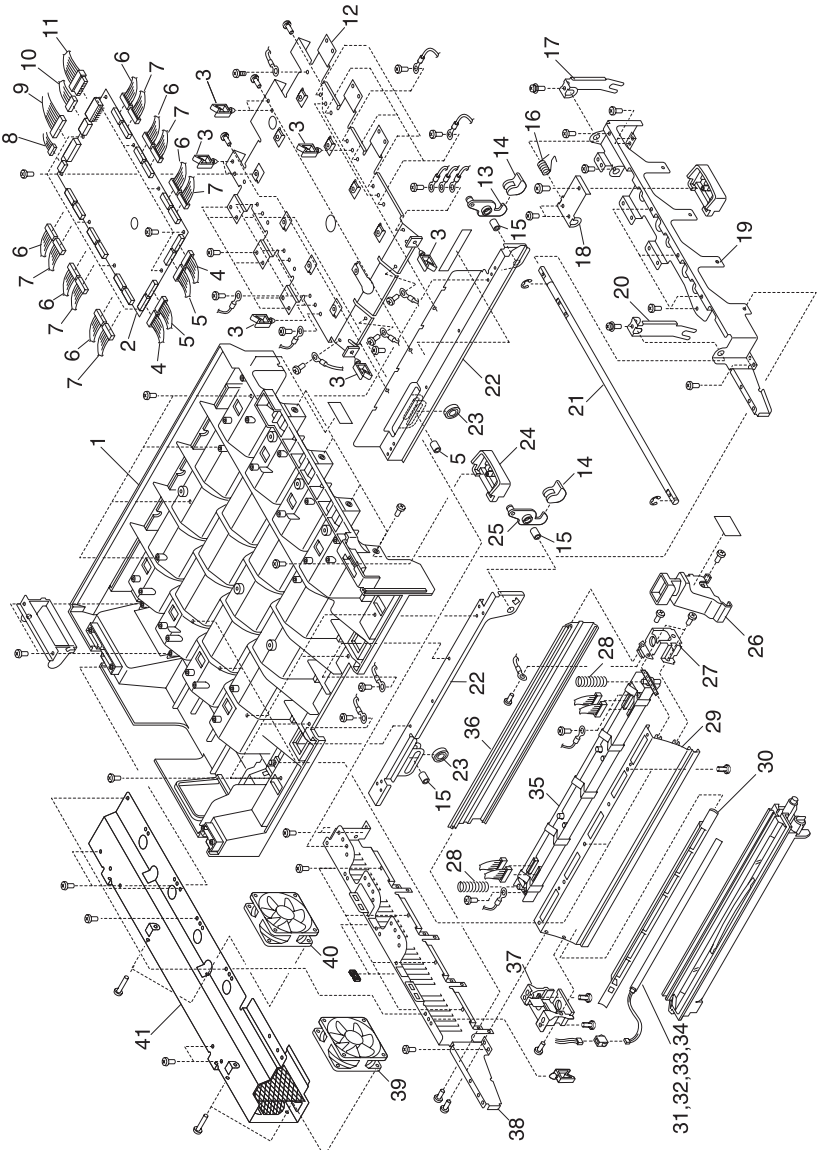

Asm-Index	Part Number	Units	Description
6 - 1	56P9591	1	Frame, Upper
2	56P9620	1	Board, Printhead Controller
3	56P9638	6	Holder, Cable
4	56P9600	2	Cable Assembly, K13
5	56P9601	2	Cable Assembly, K24
6	56P9602	6	Cable Assembly, CL13
7	56P9603	6	Cable Assembly, CL24
8	56P9716	1	Cable Assembly, 8 Pin PH Controller
9	56P9718	1	Cable Assembly, 30 Pin PH Controller
10	56P9717	1	Cable Assembly, 18 Pin PH Controller
11	56P9720	1	Cable Assembly, PH Controller Power
12	56P9637	1	Frame, Printhead Controller
13	56P9625	1	Hook, Right Link
14	56P9626	2	Cover, Hook
15	56P9628	4	Pivot, Color Link
16	56P9614	1	Spring, Return
17	56P9618	1	Hook, Right
18	56P9615	1	Hook, Middle
19	56P9612	1	Bracket, Front Upper
20	56P9617	1	Hook, Left
21	56P9613	1	Rod, Interlocking
22	56P9624	1	Link, Frame
23	56P9627	2	Bearing, Roller
24	56P9616	2	Handle, Upper Opening
25	56P9630	1	Hook, Left Link
26	56P9611	4	Holder, Front Printhead
27	56P9608	4	Holder, Front HSP
28	56P9609	8	Spring, Printhead
29	56P9592	4	Rail, Left Side
30	56P9594	4	Cover, Eraser
31	56P9595	1	Lamp, M Erase
32	56P9596	1	Lamp, C Erase
33	56P9597	1	Lamp, Y Erase
34	56P9598	1	Lamp, K Erase

Assembly 6: Upper Unit (Continued)

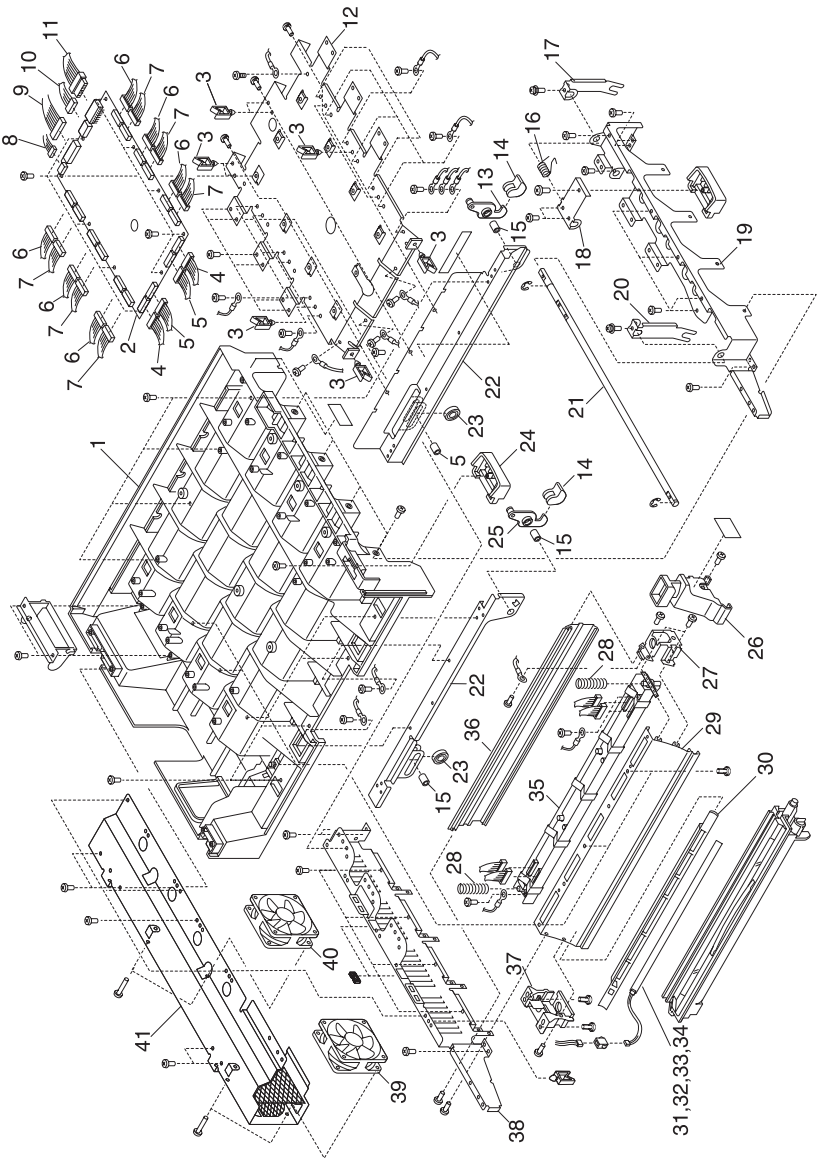

Asm-Index	Part Number	Units	Description
6 - 35	56P9599	4	Printhead, LED
36	56P9610	4	Rail, Right Side
37	56P9593	4	Holder, Rear Printhead
38	56P9619	1	Bracket, Rear Upper
39	56P9622	1	Fan, Upper Right
40	56P9623	1	Fan, Upper Left
41	56P9621	1	Bracket, Fan Holder
NS	56P9629	1	Frame, Link
NS	56P9639	4	Connector, Upper
NS	56P9604	8	Core, Ferrite
NS	56P9605	8	Cable Assembly, HDFG
NS	56P9606	4	Cable Assembly, RSPFG
NS	56P9607	2	Cable Assembly, LFG

Assembly 7: Base 1

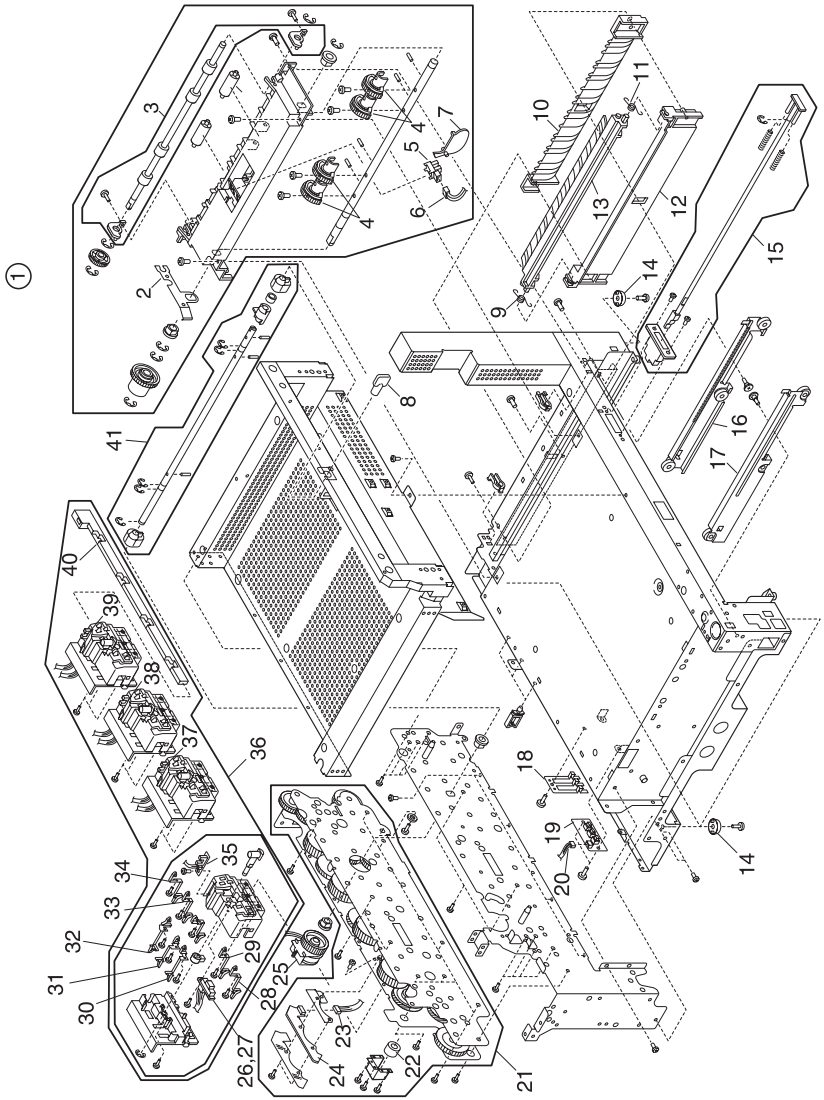

Asm-Index	Part Number	Units	Description
7 - 1	56P9664	1	Frame, Paper Feed
2	56P9503	4	Foot, Rubber
3	56P9512	1	Roller Assembly, Paper Carrying
4	56P9511	1	Roller Assembly, Paper Feed
5	11G0243	1	Interrupter, Photo
6	56P9665	1	Sensor, Paper Feed
7	56P9507	1	Actuator, Paper Feed Sensor
8	56P9520	1	Handle, Waste Bottle Cam
9	56P9517	1	Spring, Right Cassette Guide
10	56P9519	1	Guide, Lower Right Cassette
11	56P9516	1	Spring, Left Cassette Guide
12	56P9518	1	Guide, Lower Left Cassette
13	56P9515	1	Guide, Upper Cassette
14	56P9503	4	Foot, Rubber
15	56P9641	1	Actuator, Front Cover Open Switch
16	56P9505	1	Rail, Base Left Side
17	56P9504	1	Rail, Base Right Side
18	56P9521	1	Lever, Size Sensor
19	56P9522	1	Board, Size Sensor
20	56P9523	1	Cable Assembly, Size Sensor
21	56P9642	1	Unit, Drive
22	56P9643	1	Clutch, Drive Unit
23	56P9644	1	Cable Assembly, Drive Unit Sensor
24	56P9645	1	Sensor, Drive Unit Gear
25	56P9663	1	Clutch, Belt Up/Down
26	56P9659	1	Sensor Assembly, Y Drum Gear
27	56P9660	1	Sensor Assembly, K Drum Gear
28	56P9654	4	Sensor, Right Drum
29	56P9653	4	Sensor, Left Drum
30	56P9652	4	Power Supply (T)
31	56P9649	4	Power Supply (G)
32	56P9648	4	Power Supply (D)
33	56P9651	4	Power Supply (S)
34	56P9650	4	Power Supply (K)

Assembly 7: Base 1 (Continued)

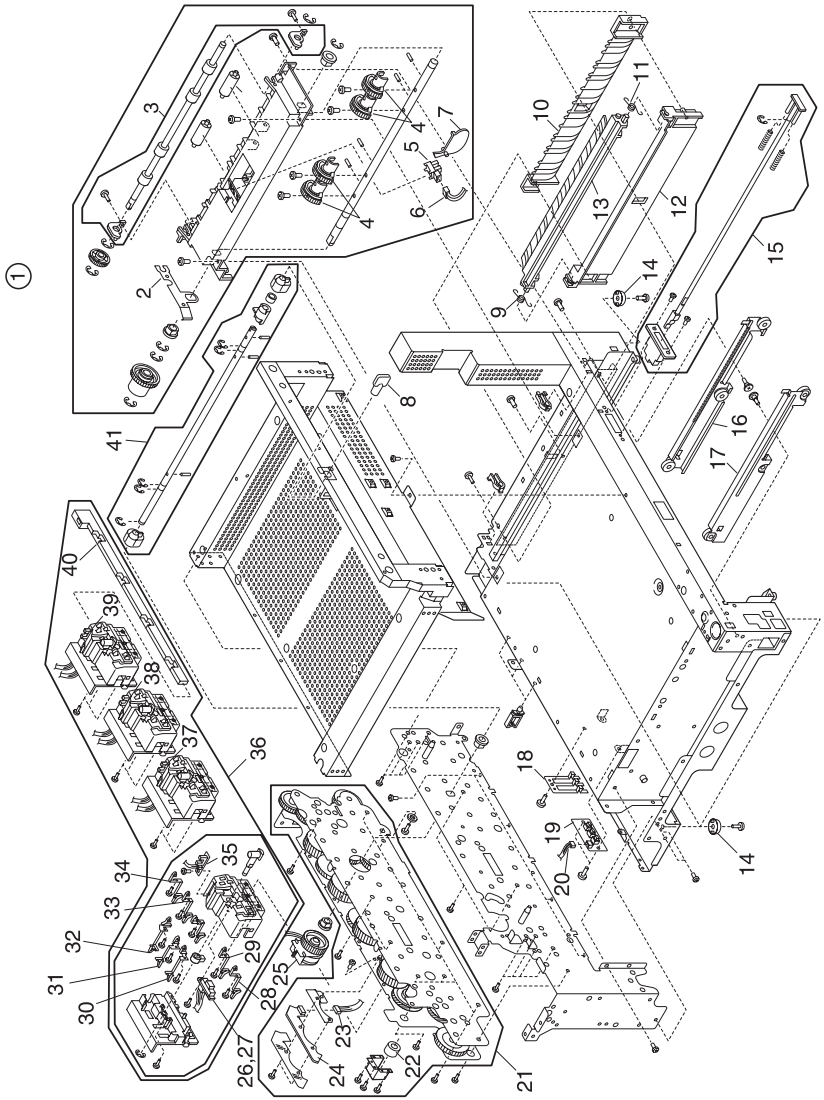

Asm-Index	Part Number	Units	Description
35	56P9658	1	Sensor Assembly, K Toner Remaining
36	56P9646	1	Frame, Sub
37	56P9657	1	Sensor Assembly, Y Toner Remaining
38	56P9656	1	Sensor Assembly, C Toner Remaining
39	56P9655	1	Sensor Assembly, M Toner Remaining
40	56P9661	1	Rod, Lock
41	56P9662	1	Shaft, Changing
NS	56P9524	2	Screw, Slide Rail
NS	11G0569	1	Parts Packet
NS	11G0579	1	Parts Packet
NS	11G0616	1	Parts Packet
NS	11G0572	1	Parts Packet
NS	11G0562	1	Parts Packet
NS	11G0577	1	Parts Packet
NS	11G0540	1	Parts Packet
NS	11G0617	1	Parts Packet
NS	11G0565	1	Parts Packet
NS	11G0566	1	Parts Packet

Assembly 8: Base 2

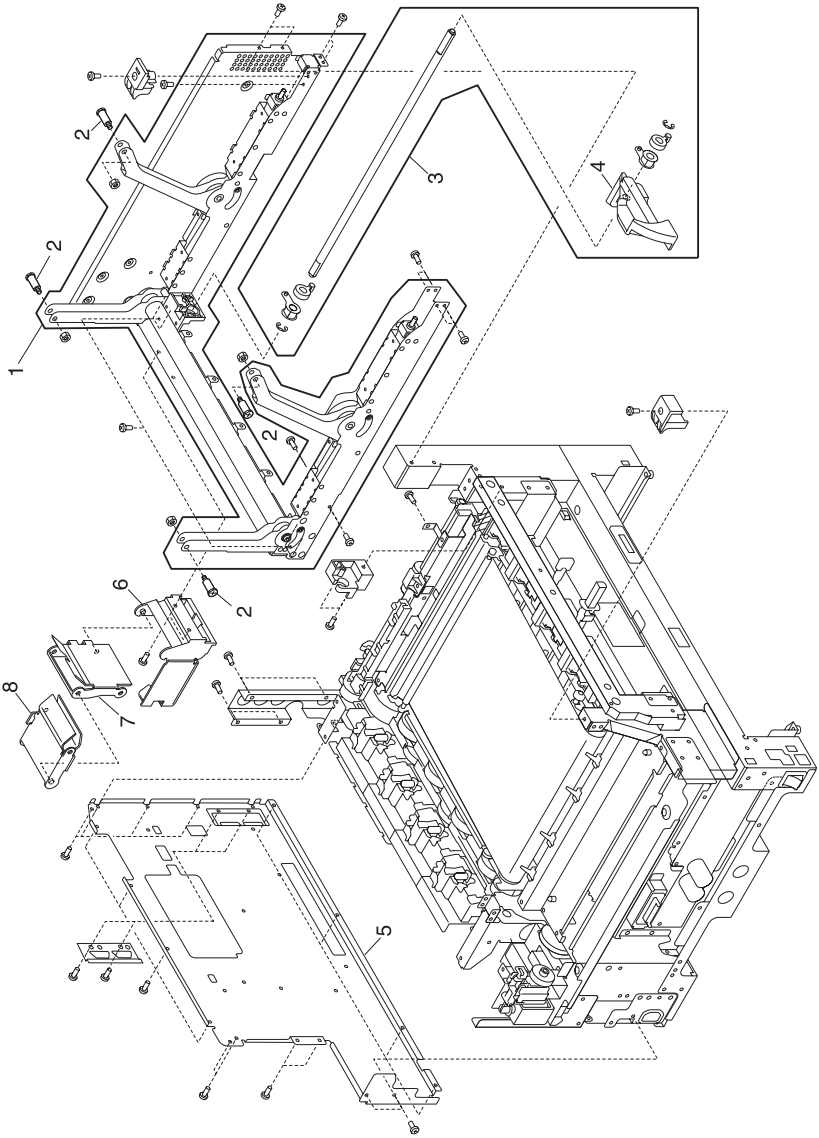

Asm-Index	Part Number	Units	Description
8 - 1	56P9666	1	Support Assembly, Upper Unit
2	56P9667	4	Pin, Upper Unit Support
3	56P9668	1	Handle Assembly, Lock
4	56P9669	1	Handle, Lock
5	56P9673	1	Cover, Electronic
6	56P9670	1	Shroud, Cable
7	56P9672	1	Guide, Cable
8	56P9671	1	Guide, Cable

Assembly 9: Base 3

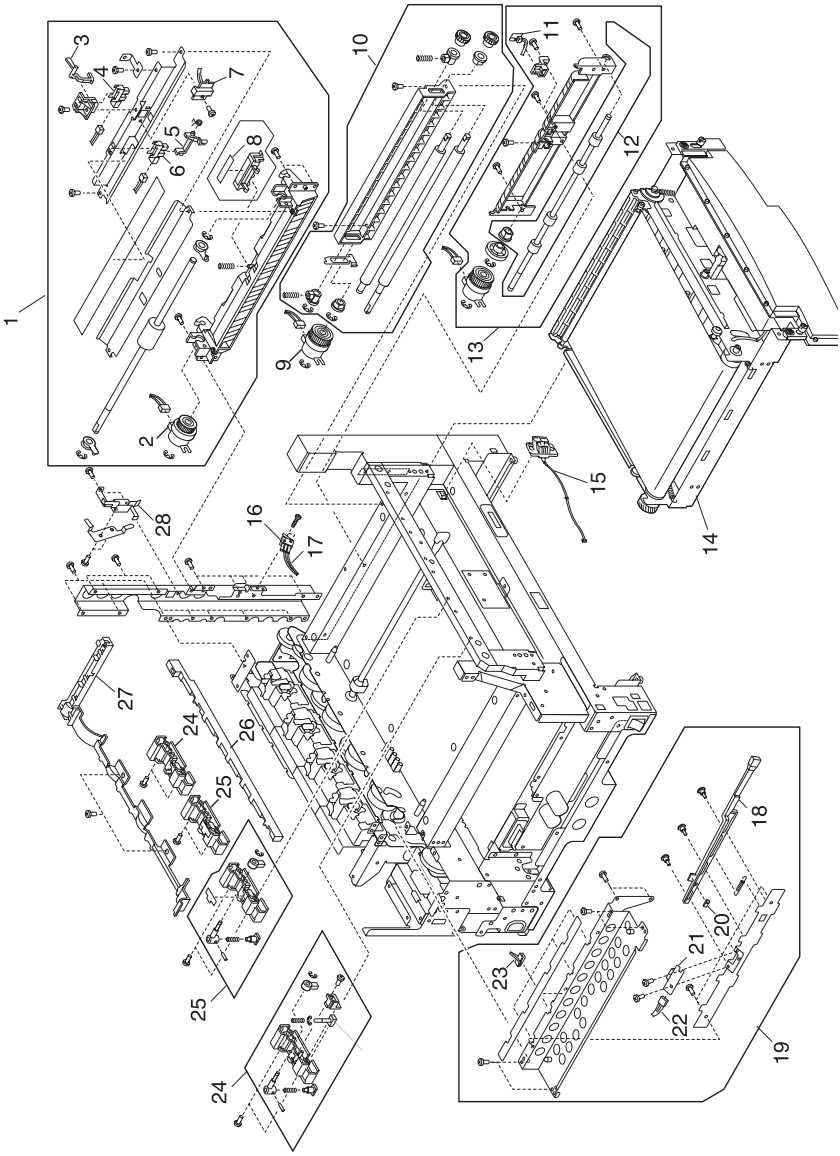

Asm-Index	Part Number	Units	Description
9 - 1	56P9688	1	Frame Assembly, MPF
2	56P9689	1	Clutch, MPF
3	56P9690	1	Actuator, MPF
4	11G0243	1	Interrupter, Photo
5	56P9691	1	Actuator, Resist
6	11G0219	1	Interrupter, Photo
7	56P9899	1	Sensor, Upper Transparency
8	11G0283	1	Pad, Framing
9	56P9681	1	Clutch, Registration
10	56P9680	1	Frame Assembly, Registration
11	56P9898	1	Sensor, Lower Transparency
12	56P9683	1	Roller Assembly, Upper Carrying
13	56P9682	1	Frame Assembly, Carrying
14	56P9694	1	Unit, Transfer Belt
15	56P9696	1	Cable Assembly, Belt Thermistor
16	56P9502	1	Sensor, Turn Guide Door
17	56P9695	1	Cable, Turn Guide Door Sensor
18	56P9679	1	Rod Cleaner
19	56P9674	1	Guide Assembly, Fuser Entrance
20	56P9678	1	Sensor Cleaner
21	56P9676	1	Sensor, Density
22	56P9677	1	Cable, Density Sensor
23	56P9675	4	Pawl, Separation
24	56P9684	2	Frame Assembly, F1 Sub
25	56P9685	2	Frame Assembly, F2 Sub
26	56P9686	1	Rod, Lock
27	56P9687	1	Cover, Gear
28	56P9693	1	Stopper, Clutch
NS	56P9697	1	Bushing
NS	56P9692	1	Cable Assembly, Reg MPF Sensor

Assembly 10: Electrical

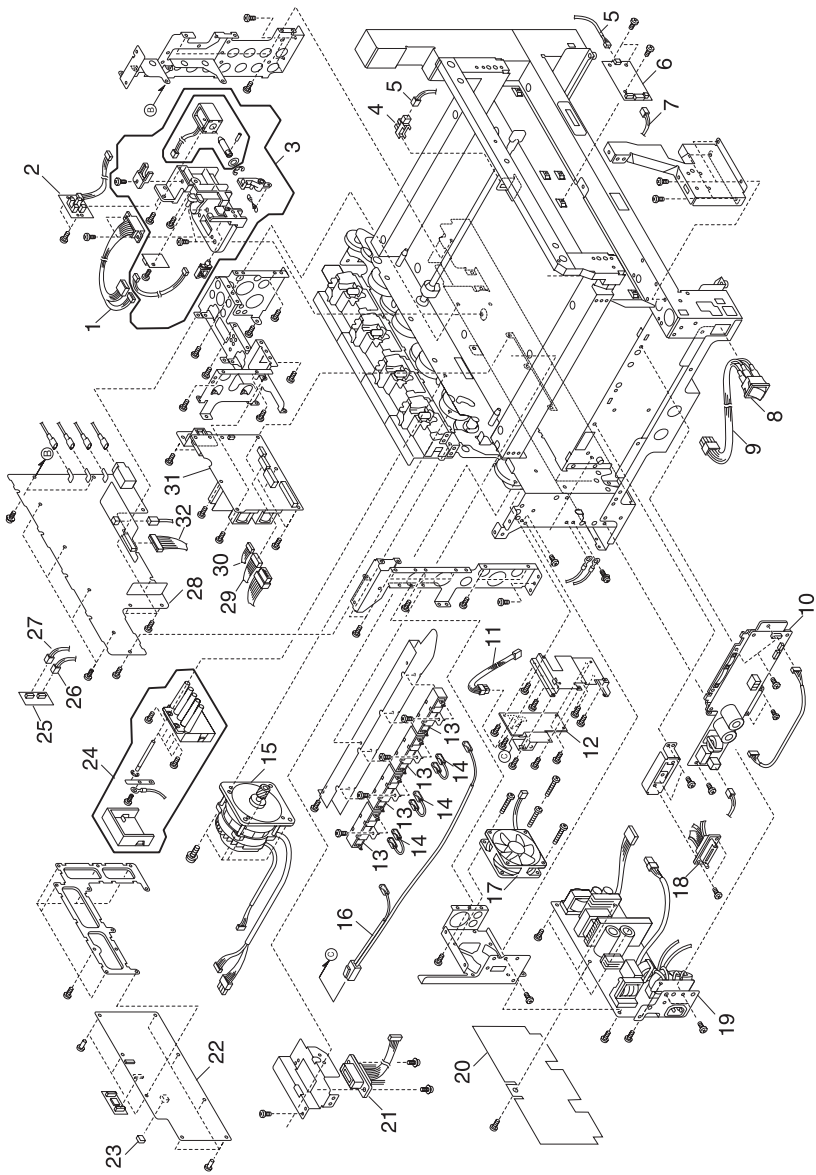

Asm-Index	Part Number	Units	Description
10 - 1	56P9705	1	Cable Assembly, Feeder
2	56P9704	1	Cable Assembly, Paper Remaining Sensor
3	56P9700	1	Solenoid Assembly, Paper Feed
4	11G0243	1	Interrupter, Photo
5	56P9702	1	Cable, Belt Up/Down Sensor
6	56P9701	1	Board, Sensor
7	56P9703	1	Cable Assembly, Sensor Board
8	56P9707	1	Switch, Power
9	56P9706	1	Cable, Power Switch
10	56P9709	1	Board, 120 V Motor Driver
10	56P9710	1	Board, 230 V Motor Driver
11	56P9739	1	Cable Asm., Conditioning Printer Controller
12	56P9742	1	Board, Heater Drive
13	56P9741	1	Resistor, Conditioning
14	56P9738	1	Cable Assembly, Conditioning Joint
15	56P9698	1	Motor Assembly, 120 V
15	56P9699	1	Motor Assembly, 230 V
16	56P9740	1	Cable, Conditioning Resistor
17	56P9713	1	Fan, Power Supply
18	56P9708	1	Cable Assembly, Duplex Connector
19	56P9722	1	Power Supply, 120 V (1)
19	56P9723	1	Power Supply, 230 V (1)
20	56P9737	1	Insulator, Sheet
21	56P9711	1	Cable, THB Drawer
21	56P9712	1	Cable, THB Drawer (EMEA)
22	56P9728	1	Board, Printer Controller
23	56P9729	1	EPROM, Printer Controller
24	56P9732	1	Belt, Power Supply
25	56P9734	1	HCPF/Finisher D-sub Assembly
26	56P9731	1	Cable Assembly, Finisher
27	56P9730	1	Cable Assembly, HCPF

Assembly 10: Electrical (Continued)

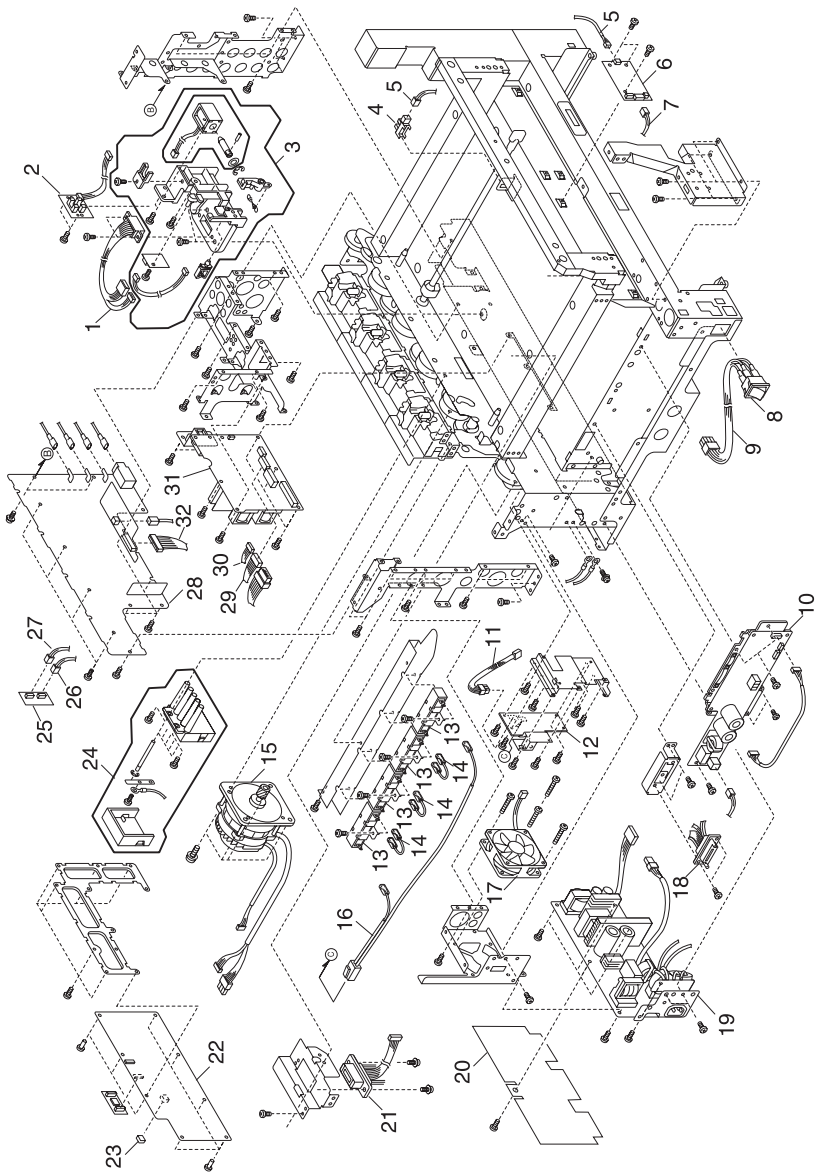

Asm-Index	Part Number	Units	Description
10 -28	56P9714	1	Board, High Voltage Power Supply
29	56P9727	1	Cable Assembly, Printer Controller Power 2
30	56P9726	1	Cable Assembly, Printer Controller Power 1
31	56P9724	1	Power Supply, 120 V (2)
31	56P9725	1	Power Supply, 230 V (2)
32	56P9715	1	Cable High Voltage Power Supply Board
NS	11D0328	1	Power Cord - USA, Canada, APG, LAD
NS	11D0329	1	Power Cord - Peru
NS	11D0330	1	Power Cord - Argentina
NS	11D0331	1	Power Cord - Brazil
NS	11D0332	1	Power Cord - Chile
NS	11D0333	1	Power Cord - Denmark
NS	11D0334	1	Power Cord - Belgium, Europe, England, France, Germany, Spain
NS	11D0335	1	Power Cord - Italy
NS	11D0336	1	Power Cord - Swiss/French, German, Italian
NS	11D0337	1	Power Cord - UK, Israel, South Africa

Assembly 11: I/F Controller

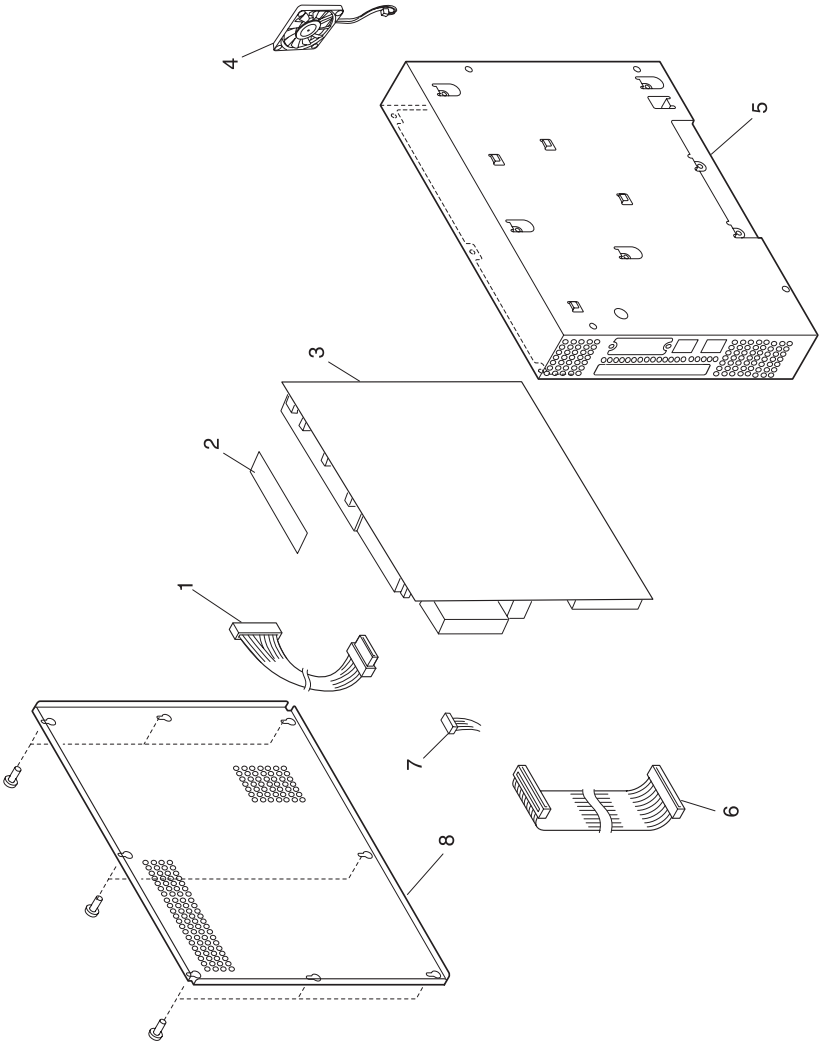

Asm-Index	Part Number	Units	Description
11 - 1	56P9749	1	Cable Assembly, Power RIP
2	56P9916	1	Card, Riser
3	56P9897	1	Board, RIP Controller
4	56P9750	1	Fan, RIP
5	56P9745	1	Box, RIP
6	56P9719	1	Cable Assembly, 80 Pin RIP Printer Controller
7	56P9736	1	Cable, Operator Panel
8	56P9746	1	Cover, RIP Box
NS	56P9747	1	Cable Assembly, Power MAC
NS	56P9748	1	Cable Assembly, MIF
NS	56P9904	1	Board, RIP Controller (Network)
NS	12G6509	1	Card, SDRAM DIMM
NS	56P9910	1	Card Assembly, 128MB SDRAM memory
NS	56P9911	1	Card Assembly, 256MB SDRAM memory
NS	56P9912	1	Card Assembly, 4MB Flash DIMM memory
NS	56P9913	1	Card Assembly, 8MB Flash DIMM memory
NS	56P9914	1	Card Assembly, 16MB Flash DIMM memory
NS	99A2489	1	Hard Disk, 5+ GB w/Mounting Kit (formatted)
NS	56P9933	1	Mounting Kit, Hard Drive
NS	56P9934	1	Card, Token Ring
NS	12G1695	1	Card, Ethernet 10/100Base-TX
NS	12G1696	1	Card, Ethernet 10BaseT/2
NS	56P0161	1	Card, RS-232C Serial/Parallel 1284 A-C Interface
NS	99A0560	1	Card, Tri-Port Adapter
NS	99A0424	1	Card, Infrared Adapter
NS	99A0545	1	Card, External Serial Adapter
NS	99A0629	1	Card, Coax/Twinax Adapter for SCS
NS	56P0162	1	Adapter, Parallel 1284 C-B
NS	13A0296	1	Cable, Twinax
NS	13A0297	1	Cable, Coax

Assembly 11: I/F Controller (Continued)

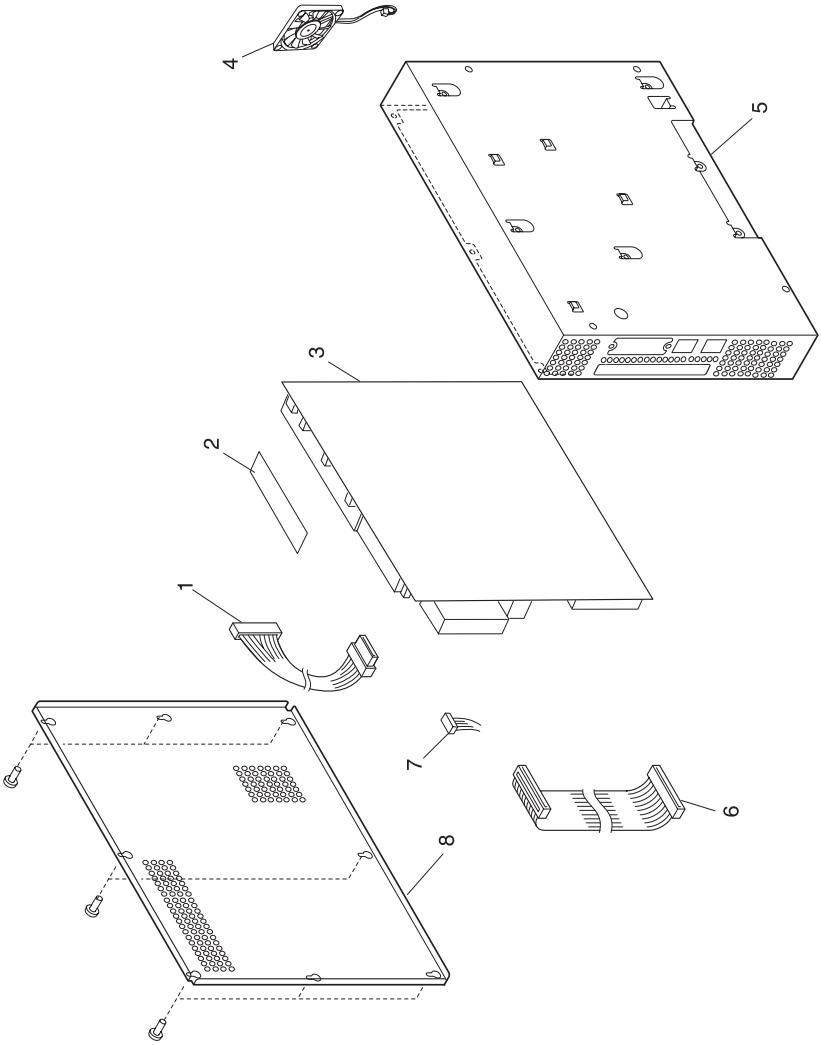

Asm-Index	Part Number	Units	Description
NS	56P9926	1	Software, Optra Forms
NS	56P9927	1	Software, Optra Forms Director
NS	56P9928	1	DIMM, Lexmark Forms 4MB Flash
NS	56P9929	1	DIMM, Lexmark Forms 8MB Flash
NS	56P9930	1	DIMM, Lexmark Forms 16MB Flash
NS	56P9932	1	Hard Disk, Lexmark Forms 5+ GB

Assembly 12: Fuser Unit

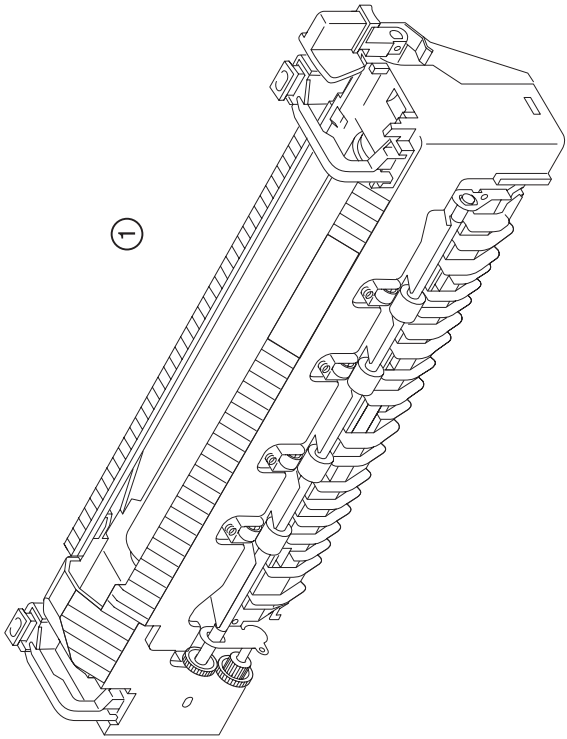

Asm-Index	Part Number	Units	Description
12 - 1	56P9751	1	Fuser, 120 V
1	56P9752	1	Fuser, 230 V

Assembly 13: Cassette

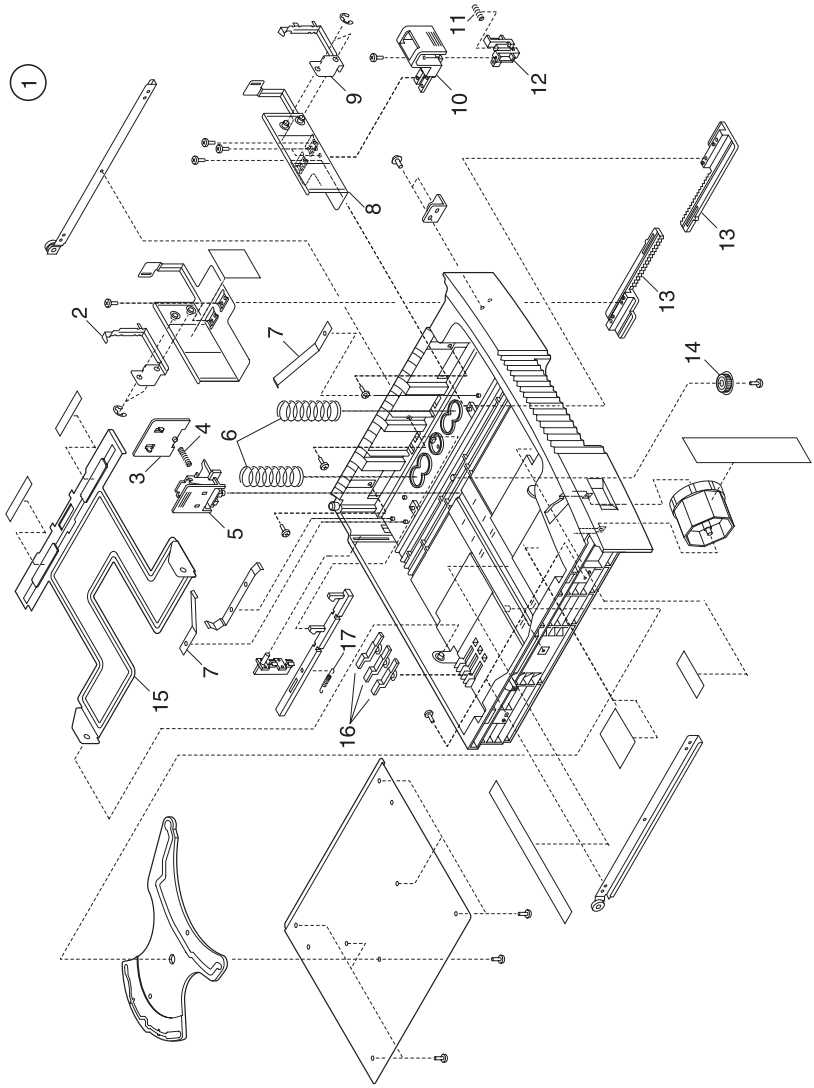

Asm-Index	Part Number	Units	Description
13 - 1	56P9500	1	Cassette, Paper Feed
2	56P9761	1	Pawl, Rear
3	56P9754	1	Plate, Right Rear Location
4	56P9755	1	Spring, Location Plate
5	56P9753	1	Plate, Left Rear Location
6	56P9763	2	Spring, A Push Up
7	56P9764	2	Spring, B Push Up
8	56P9757	1	Locator, Front Side
9	56P9758	1	Pawl, Front
10	56P9759	1	Lock, A Side
11	11G0284	1	Spring, Lock
12	56P9760	1	Lock, B Side
13	56P9756	2	Rack, PF Cassette
14	11G0118	1	Pinion, PF Cassette
15	56P9762	1	Plate, Lower
16	11G0385	3	Sensor, Actuator
17	11G0120	1	Spring, Tray Lock

Assembly 14: Expansion Feeder 1

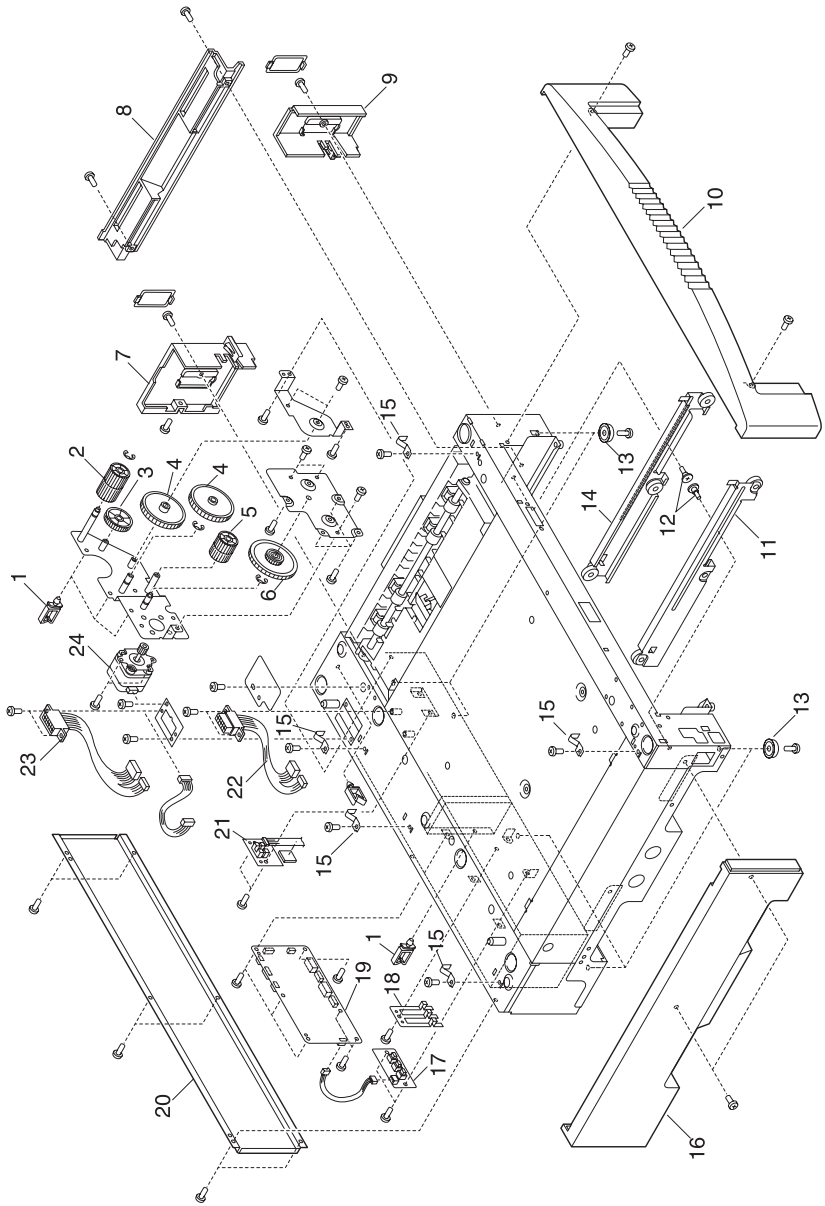

Asm-Index	Part Number	Units	Description
14 - 1	56P9780	4	Guide, Wire
2	56P9773	1	Gear, Feeder E
3	56P9771	1	Gear, Feeder C
4	11G0422	2	Gear, Feeder B
5	56P9772	1	Gear, Feeder D
6	11G0423	1	Gear, Feeder A
7	56P9770	1	Cover, Right Side C
8	56P9769	1	Cover, Right Side B
9	56P9767	1	Cover, Right Side A
10	56P9765	1	Cover, Front Feeder
11	56P9504	1	Rail, Left Side
12	56P9524	2	Screw, Slide Rail
13	56P9503	6	Foot, Rubber
14	56P9505	1	Rail, Right Side
15	11G0399	5	Plate, Ground
16	56P9766	1	Cover, Left Side
17	56P9522	1	Board, Size Sensor
18	56P9521	1	Lever, Size Sensor
19	56P9779	1	Board, Expansion Feeder Control
20	56P9768	1	Cover, Rear
21	56P9776	1	Board, Paper Remaining Sensor
22	56P9778	1	Cable Assembly, Lower Optional Drawer
23	56P9777	1	Cable Assembly, Upper Optional Drawer
24	56P9774	1	Motor, Feeder Drive
NS	56P9775	1	Cable Assembly, Size Sensor

Assembly 15: Expansion Feeder 2

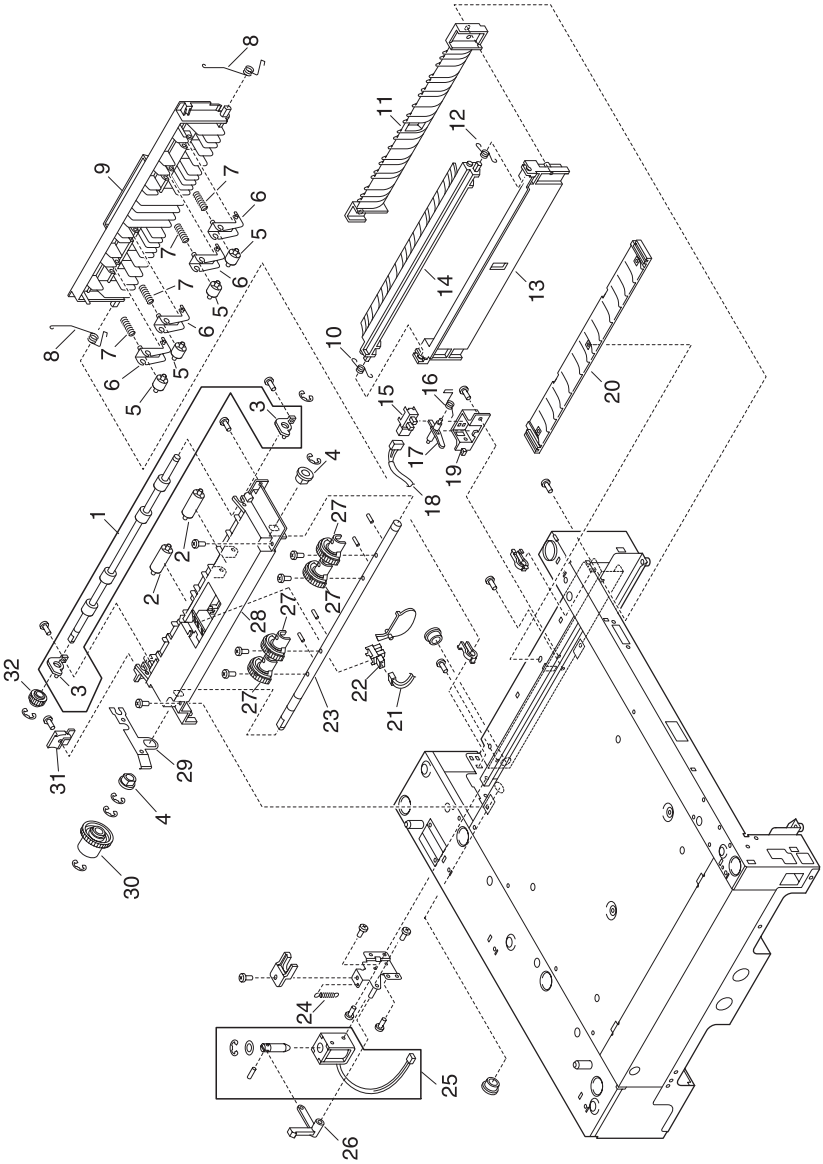

Asm-Index	Part Number	Units	Description
15 - 1	56P9796	1	Roller Assembly, Carrying
2	56P9514	2	Roller, Noise Reduction
3	56P9513	2	Bushing, Carrying
4	56P9509	2	Bushing, Metal
5	56P9790	4	Roller, Paper Carrying
6	56P9792	4	Holder, Roller
7	56P9791	4	Spring, Paper Carrying
8	56P9794	1	Spring, Right Turn Guide
9	56P9789	1	Guide, Turn
10	56P9517	1	Spring, Right Cassette Guide
11	56P9519	1	Guide, Lower Right Cassette
12	56P9516	1	Spring, Left Cassette Guide
13	56P9518	1	Guide, Lower Left Cassette
14	56P9515	1	Guide, Upper Cassette
15	11G0563	1	Interrupter, Photo
16	56P9786	1	Spring, Paper Detection Sensor
17	56P9784	1	Actuator, Paper Detection
18	56P9787	1	Cable, Paper Present Sensor
19	56P9785	1	Cover, Paper Present Sensor
20	56P9788	1	Guide, HCPF
21	56P9795	1	Cable, Paper Present Sensor
22	11G0219	1	Interrupter, Photo
23	56P9510	1	Shaft, Paper Feed
24	56P9782	1	Spring, Solenoid
25	56P9783	1	Solenoid, Feeder
26	56P9781	1	Lever, Clutch
27	56P9511	4	Roller Assembly, Paper Feed
28	56P9506	1	Frame, Paper Feed
29	56P9508	1	Bracket, Ground
30	11G0291	1	Clutch, Paper Feed
31	56P9797	1	Cover, Gear
32	11G0297	1	Gear, Paper Carrying
NS	56P9793	1	Spring, Left Turn Guide
NS	56P9507	1	Actuator, Paper Feed Sensor

Assembly 16: Duplex Unit 1

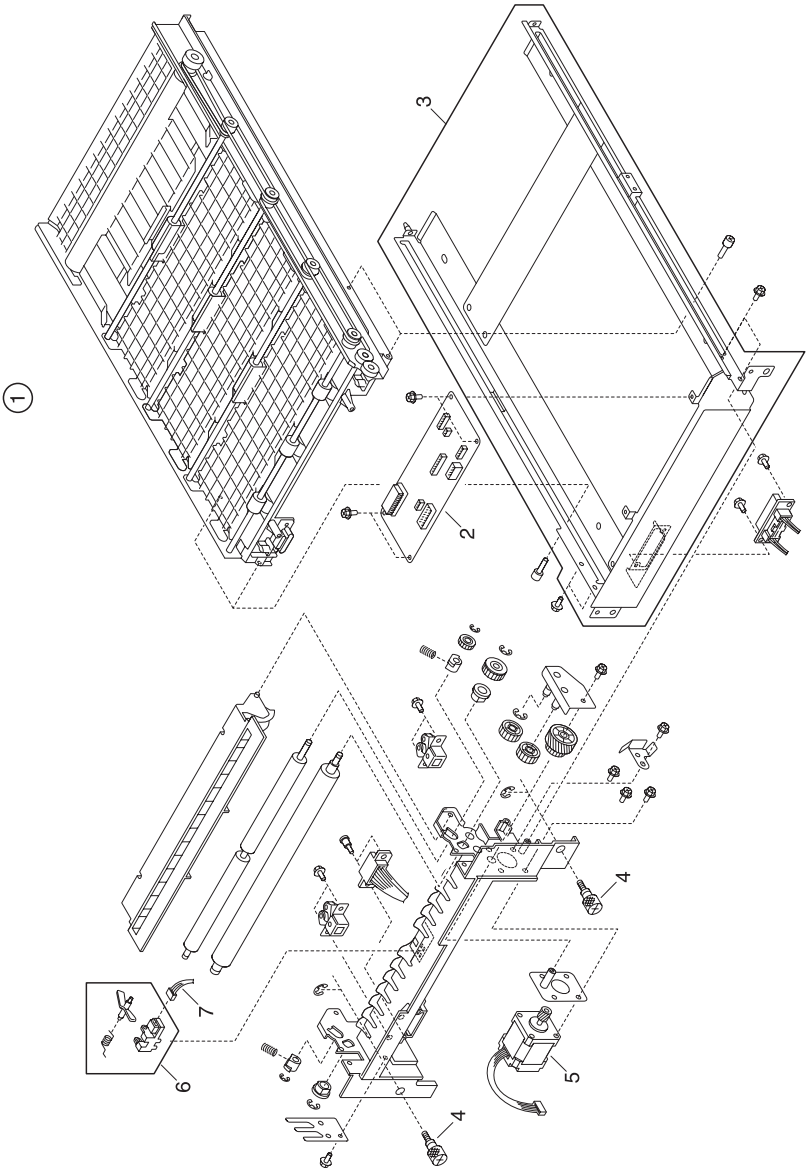

Asm-Index	Part Number	Units	Description
16 - 1	56P9798	1	Duplex Assembly
2	56P9804	1	Board, Duplex Interface
3	56P9799	1	Frame, Duplex
4	56P9800	2	Screw, Duplex Mounting
5	56P9803	1	Motor, Duplex Stepping
6	56P9525	1	Interrupter, Photo
7	56P9806	1	Cable Assembly, Paper Detection
NS	56P9807	1	Cable Assembly, Duplex Interface
NS	56P9805	1	Cable Assembly, Duplex Connection

Assembly 17: Duplex Unit 2

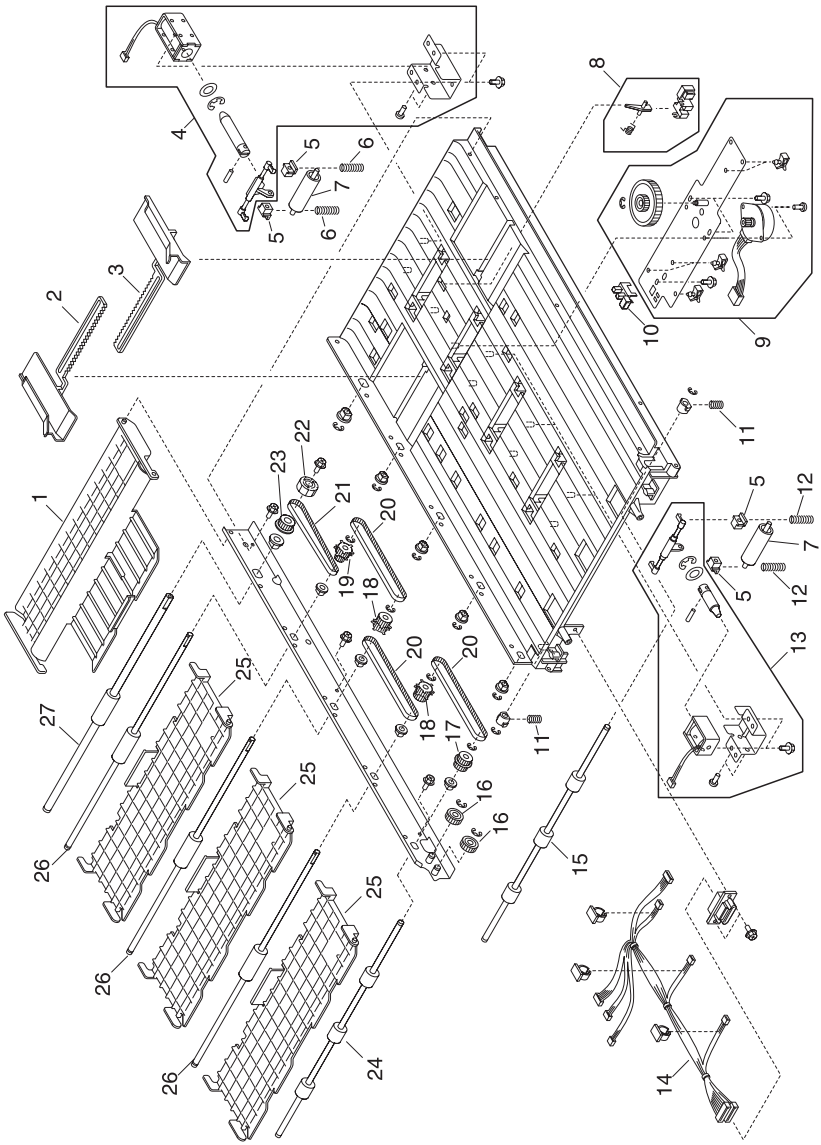

Asm-Index	Part Number	Units	Description
17 - 1	56P9825	1	Plate, Paper Re-Feed Drawer
2	56P9827	1	Guide, Rear Side
3	56P9826	1	Guide, Front Side
4	56P9830	1	Solenoid Assembly, Paper Re-feed
5	56P9814	8	Bearing, Release
6	56P9816	2	Spring, Re-feed Roller
7	56P9813	4	Roll, Release
8	56P9525	1	Interrupter Assembly, Photo
9	56P9828	1	Motor Assembly, Paper Guide
10	56P9808	1	Interrupter, Photo
11	56P9526	2	Spring, Feed Roller
12	56P9815	6	Spring, Feed Roller
13	56P9829	3	Solenoid Assembly, Feed Roller
14	56P9831	1	Cable Assembly, Duplex Drawer
15	56P9810	1	Roller, Follow-up Feed
16	56P9527	2	Gear, Idler
17	56P9817	1	Gear, Carrying Roller
18	56P9818	2	Pulley, Carrying Roller Timing
19	56P9819	1	Pulley, Feed Roller
20	56P9822	3	Belt, Timing
21	56P9823	1	Belt, Timing
22	56P9821	1	Knob, Paper Re-feed
23	56P9820	1	Pulley, Re-feed Roller
24	56P9809	1	Roller, Drive Feed
25	56P9824	3	Plate, Paper Carrying Drawer
26	56P9811	3	Roller, Middle Feed
27	56P9812	1	Roller, Re-feed
NS	56P9832	1	Parts Packet, Screw HCPF

Assembly 18: High Capacity Paper Feed 1

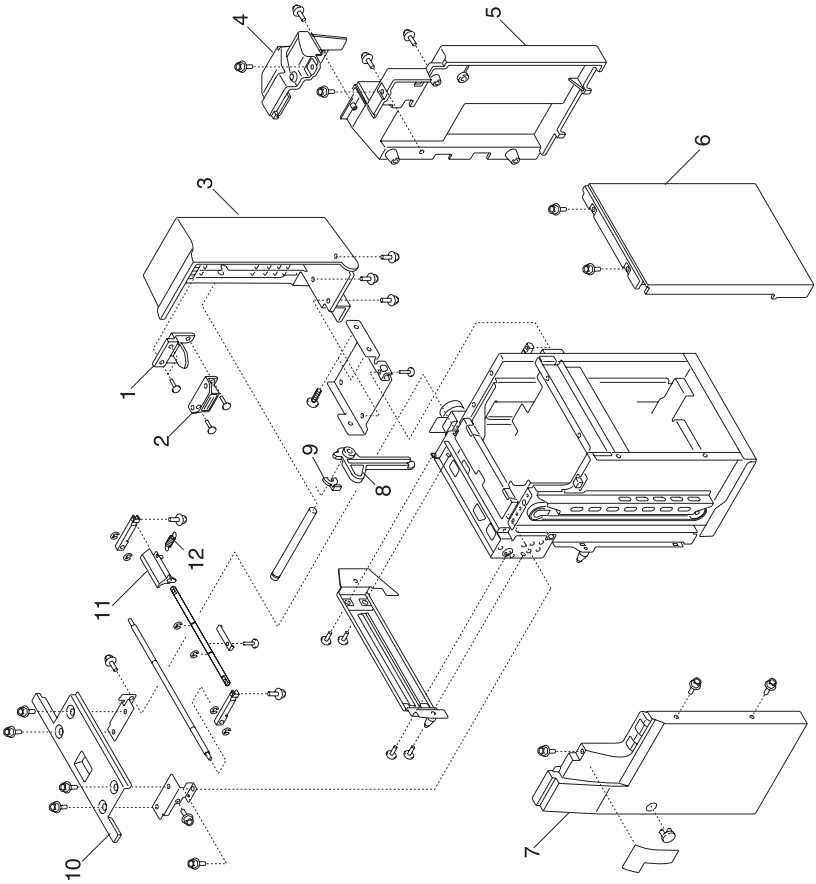

Asm-Index	Part Number	Units	Description
18 - 1	56P9838	1	Catch, Door
2	56P9835	1	Magnet, Latch
3	56P9837	1	Cover, Upper
4	56P9834	1	Cover, Upper Rear
5	56P9843	1	Cover, Lower Rear
6	56P9839	1	Cover, Right
7	56P9833	1	Cover, Front
8	56P9836	1	Fence, End
9	56P9940	1	Ring, Snap
10	56P9841	1	Cover Assembly, Upper
11	56P9840	1	Lever, Vertical Transport
12	56P9842	1	Spring, Tension

Assembly 19: High Capacity Paper Feed 2

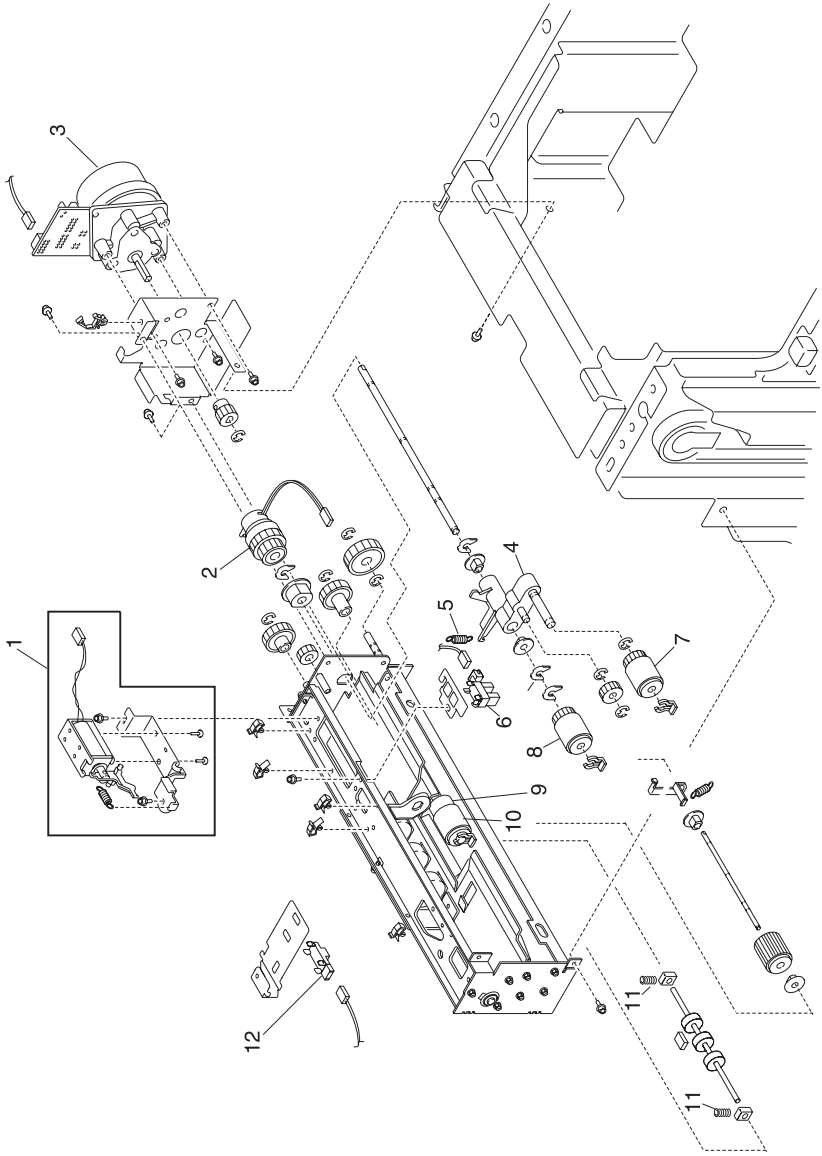

Asm-Index	Part Number	Units	Description
19 - 1	56P9846	1	Solenoid Assembly, Paper Pickup
2	56P9848	1	Clutch, Paper Feed
3	56P9844	1	Motor Assembly, Transport
4	56P9941	1	Arm, Pick-up
5	56P9501	1	Spring, Pressure
6	56P9528	1	Interrupter, Photo
7	56P9849	1	Roller, Manual Feed Pickup
8	56P9850	1	Roller, Manual Feed
9	56P9852	1	Limiter, Torque
10	56P9851	1	Roller, Manual Feed Separate
11	56P9847	2	Spring, Compression
12	56P9845	1	Sensor Assembly, Paper Feed

Assembly 20: High Capacity Paper Feed 3

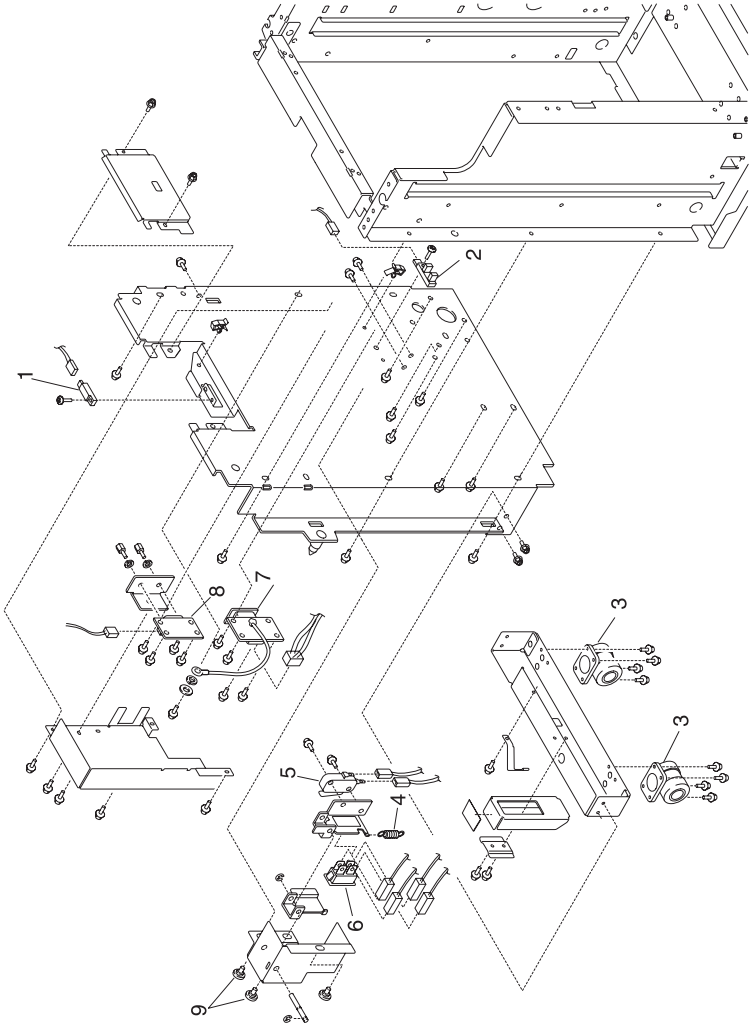

Asm-Index	Part Number	Units	Description
20 - 1	56P9854	1	Sensor Assembly, Photo
2	56P9855	1	Interrupter, Photo
3	56P9529	1	Caster, HCPF
4	56P9856	1	Spring, Tension
5	56P9857	1	Switch, Micro
6	56P9530	1	Switch, Push
7	56P9859	1	Connector, Inlet
8	56P9858	1	Connector, I/F
9	56P9853	3	Screw, Shoulder

Assembly 21: High Capacity Paper Feed 4

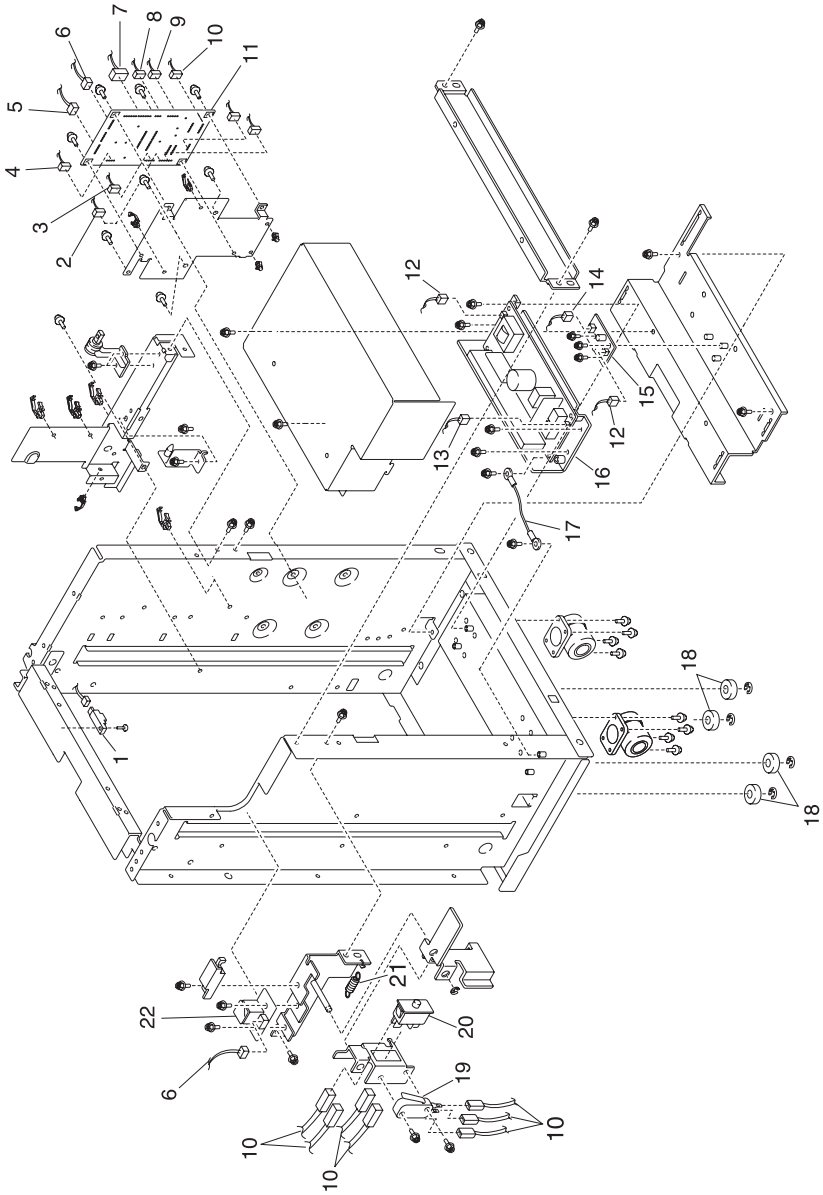

Asm-Index	Part Number	Units	Description
21 - 1	56P9541	1	Sensor, Resistor
2	56P9875	1	Cable Assembly, Safety Switch
3	56P9865	1	Cable Assembly, HCPF Motor
4	56P9871	1	Cable Assembly, I/F
5	56P9866	1	Cable Assembly, Paper Feed Sensor
6	56P9880	1	Cable, Up/Down Switch
7	56P9879	1	Cable, Paper Volume
8	56P9878	1	Cable Assembly, Sensor
9	56P9877	1	Cable Assembly, Paper Size Sensor
10	56P9876	1	Cable Assembly, Lift Motor
11	56P9868	1	Board, High Capacity Paper Feed
12	56P9873	1	Cable Assembly, Power Supply Out
13	56P9872	1	Cable Assembly, Power Supply In
14	56P9874	1	Cable Assembly, Power Supply
15	56P9870	1	Converter, DC/DC
16	56P9869	1	Power Supply, HCPF
17	56P9867	1	Cable Assembly, Drawer Ground
18	56P9861	4	Roller, Track
19	56P9864	1	Switch, Micro
20	56P9530	1	Switch, Push
21	56P9862	1	Spring, Pressure Pickup
22	56P9863	1	Switch, HCPF Push

Assembly 22: High Capacity Paper Feed 5

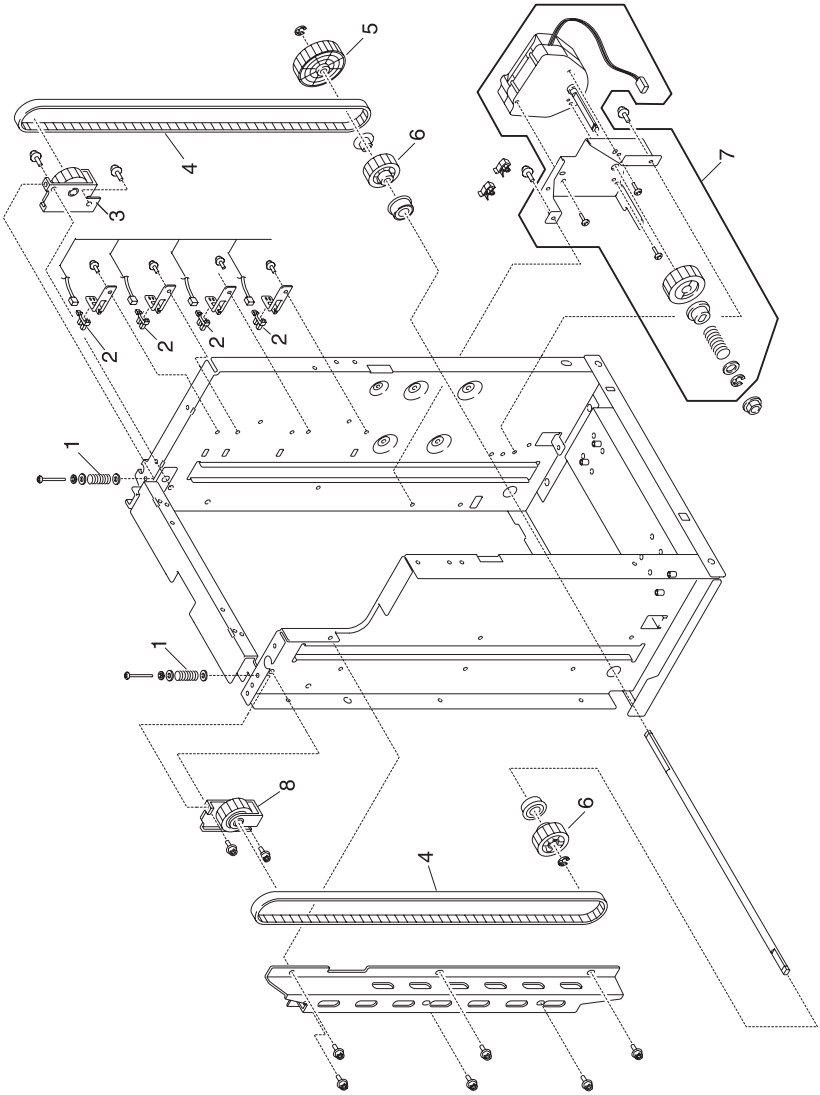

Asm-Index	Part Number	Units	Description
22 - 1	56P9883	2	Spring, Pressure
2	56P9528	4	Interrupter, Photo
3	56P9888	1	Bracket, Rear Idler
4	56P9884	2	Belt, Timing
5	56P9886	1	Gear, Drive
6	56P9885	2	Pulley, Timing
7	56P9882	1	Motor, HCPF DC
8	56P9887	1	Bracket, Front Idler

Assembly 23: High Capacity Paper Feed 6

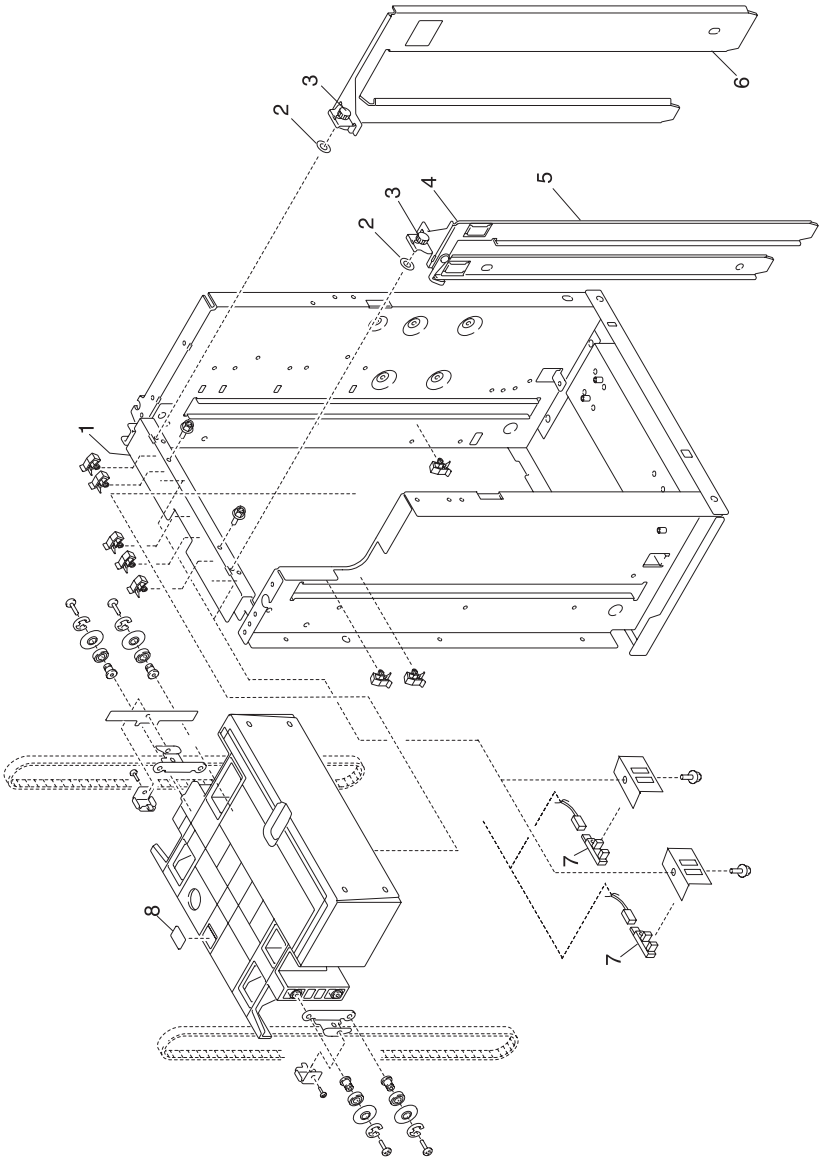

Asm-Index	Part Number	Units	Description
23 - 1	56P9892	1	Plate, Upper Side Fence
2	56P9893	2	Knob
3	56P9891	2	Knob, Tray
4	56P9890	2	Plate, Paper Adhesion
5	56P9915	1	Fence Assembly, Front Side
6	56P9894	1	Fence Assembly, Rear Side
7	56P9528	2	Interrupter, Photo
8	56P9889	1	Pad, Friction

Index

A

Abbreviations 1-4
Adjustments 2-1
Attendance Messages 2-25

C

Clearing the Error Log 3-26
Component Locations 5-16
Connectors
  covers diagram 5-1
  duplex unit controller board 5-10
  extension paper feeder controller board 5-9
  high voltage power supply board 5-8
  major parts diagram 5-2
  motor drive board 5-10
  power source unit 1 board 5-7
  power source unit 2 board 5-7
  printer controller board 5-4
  printhead controller board 5-5
  RIP board 5-6
  sensor board 5-9
  size sensor board 5-10

D

Defaults 3-20
Device Tests 3-17
Diagnostic Aids 3-1
Diagnostic Information 2-1
Diagnostic Mode 3-6
Diagnostics - Printer Setup 3-20
Driving Parts Layout 5-14

E

Electrical Parts Layout 5-13
Error Log 3-25
Exiting Diagnostics Mode 3-26

G

General Information 1-1

H

Handling Printed Circuit Boards 4-2
Hardware Tests 3-10
HCPF Sensor / Switch Test 1-35
High Capacity Paper Feed Configuration 5-12
High Capacity Paper Feed Diagram 5-11

I

Image Quality Troubleshooting 2-69
Index 1
Initial Check 2-3

L

LEDs
  cleaning 2-71
Locations 5-1
Lubricants And Cleaners 6-2

M

Maintenance Analysis Procedures 2-43
Maintenance Approach 1-1
Maintenance Kit 6-1
Maps
  1 - False "Side Door Open" Message 2-43
  10 - Unrecoverable "Check Tray (X) or Duplex Connection" Message 2-49
  11 - Paper size 2-51
  2 - False "Close Top Door" Message 2-43
  3 - False "Close Tray (X) Top Cover" Message 2-44
  4 - False "Tray (X) Low/empty" Message 2-45
  5 - False "30 Oil Coating Roll Missing" Message 2-46
  6 - False " Print Unit Missing" Message 2-46

7 - False "88 Toner Low/toner Empty" Message 2-47
8 - False "40 Tray (X) Size Sensor Error" Message 2-48
9 - False "41 Open Bin 1 Exit Tray" Message 2-48
Menu Overview 3-4
Menu Settings 3-4

O

Operator Menu Disabled 3-4
Operator Panel Buttons 3-3

P

Parts Catalog 7-1
base 1 7-16
base 2 7-20
base 3 7-22
cassette 7-34
covers 7-2
covers 2 7-4
covers 3 7-6
covers 4 7-8
covers 5 7-10
duplex unit 1 7-40
duplex unit 2 7-42
electrical 7-24
expansion feeder 1 7-36
expansion feeder 2 7-38
fuser unit 7-32
high capacity paper feed 1 7-44
high capacity paper feed 2 7-46
high capacity paper feed 3 7-48
high capacity paper feed 4 7-50
high capacity paper feed 5 7-52
high capacity paper feed 6 7-54
I/F controller 7-28
upper unit 7-12
Periodic Maintenance 6-2
POST 3-1
Power-On Self-Test Sequence 3-1
Preventive Maintenance 6-1
Print Quality Pages 3-9
Print Quality Problems 2-69
Printer Messages 2-4
Printing Menu Settings 3-4

R

Removals
belt up/down clutch 4-42
belt up/down detection sensor 4-34
cassette guide 4-21
connector, duplex unit 4-47
covers
front 4-5
front left 4-6
IF controller 4-9
left side 4-7
operator panel 4-4
rear 4-6
right side 4-8
RIP board 4-9
solenoid 4-7
top 4-4
density sensor 4-36
drive gear unit sensor assembly 4-41
drive motor assembly 4-45
drum gear sensor 4-39
duplex feed roller and solenoid 4-73
duplex paper carrying motor 4-75
duplex pressure roller and solenoid 4-73
duplex side fence motor / side fence 4-74
duplex timing belt 4-72
duplex unit 4-72
duplex unit separation 4-71
electronic box 4-11
eraser 4-14
expansion paper feeder 4-63
face-down guide assembly 4-55
face-up paper exit assembly 4-54
face-up/down (flapper detection) sensor 4-54
face-up/down solenoid 4-54
fanning pad 4-25
front cover open switch actuator 4-58
full sensor 4-55
fuser 4-62
gear cover 4-23

HCPF
call roller, paper feed roller, reverse roller 4-77
covers 4-76
paper end sensor 4-79
paper level sensor 4-82
paper size sensors (1, 2) 4-79
pickup solenoid 4-78
power supply 4-83
tray motor 4-81
high capacity paper feeder (HCPF) 4-76
high voltage power supply board 4-38
LED printhead 4-12
lock handle assembly 4-59
main drive unit 4-50
main unit fan 4-49
multi-purpose feeder clutch 4-23
multi-purpose feeder paper present sensor 4-27
multi-purpose feeder roll 4-23
multi-purpose feeder tray 4-17
OHP detection sensor (lower) 4-28
OHP detection sensor (upper) 4-23
paper carrying clutch 4-28
paper carrying frame 4-28
paper carrying roller 4-18
paper carrying roller (upper) 4-28
paper delivery sensor 4-54
paper exit motor 4-55
paper exit tray 4-10
paper exit tray switch 4-54
paper feed frame 4-20
paper feed roller 4-18
paper feed solenoid 4-22
paper present sensor 4-19
paper remaining sensor 4-22
paper size sensor board assembly 4-48
power supply 1 4-43
power supply 2 4-44
power switch 4-46
printer controller 4-37
printhead controller board 4-15
R sub frame 4-39
registration clutch 4-29
registration frame 4-29
registration sensor 4-26
right slide rail 4-58
RIP box 4-11
sensor board 4-35
sensor cleaner 4-36
separation fingers 4-36
stay arm 4-61
sub frame F1, sub frame F2 4-40
temperature/humidity sensor 4-22
toner remaining sensor 4-39
top unit 4-60
transfer belt 4-30
turn guide cover sensor 4-57
upper fan 4-16
Repair Information 4-1

S

Safety Information ix
Sensor and Switch Locations 5-15
Serial Number 1-3, 3-23
Service Checks 2-55
drive 1 DC motor 2-55
drive 2 stepper motor 2-55
duplex 2-56
expansion paper feed 2-56
face-down stacker full 2-57
high capacity paper feed (HCPF) 2-57
marks on paper 2-66
operator panel 2-58
options 2-77
paper carrying 2-58
paper exit, FU/FD 2-63
paper tray missing 2-63
photodeveloper missing 2-64
power supply 2-65
serial port 2-77
Transfer Belt Up/Down 2-68
Service Error Message Table 2-4
Service Precautions 4-1
Setting Configuration ID 3-24
Setting the Page Count 3-23
Start 2-3
Symptom Table 2-52

T

Test 3-10
Tests
button 3-10
device 3-17
disk test/clean 3-18
DRAM memory 3-11
flash 3-19
hardware 3-10
input source print 3-8
LCD hardware 3-10
parallel wrap 3-13
print 3-8
print quality pages 3-9
quick disk 3-17
ROM memory 3-12
serial wrap 3-15
Theory
belt unit 1-15
belt up/down 1-16
cassette paper feeder 1-9
cleaning unit 1-7
clearing paper jams 1-20
delivery 1-14
development unit 1-6
drive system 1-8
duplex unit 1-17
electrophotography process 1-5
envelope / postcard mode 1-19
expansion paper feeder 1-16
fuser unit 1-13
high capacity paper feeder (HCPF) 1-25
maintenance mode 1-33
multi-purpose feeding 1-10
OHP mode 1-18
operation mode 1-19
paper feeding 1-9
paper feeding / fusing 1-7
printing mode 1-18
processes and configuration 1-5
registration unit 1-11
separation unit 1-12
thick paper mode 1-18
transfer unit 1-6
Tools 1-2
Troubleshooting 2-69

U

Using the Operator Panel 3-2

V

Viewing And Resetting The Drum Counters 3-22
Viewing and Resetting the Drum Counters 3-22
Viewing the Error Log 3-25
Viewing the Permanent Page Count 3-23

Part Numbers

11D0328 7-27
11D0329 7-27
11D0330 7-27
11D0331 7-27
11D0332 7-27
11D0333 7-27
11D0334 7-27
11D0335 7-27
11D0336 7-27
11D0337 7-27
11G0117 7-11
11G0118 7-11, 7-35
11G0120 7-11, 7-35
11G0135 7-7
11G0219 7-7, 7-23, 7-39
11G0243 7-5, 7-17, 7-23, 7-25
11G0283 7-23
11G0284 7-35
11G0291 7-39
11G0297 7-39
11G0385 7-35
11G0399 7-37
11G0422 7-37
11G0423 7-37
11G0540 7-19
11G0562 7-19
11G0563 7-39
11G0565 7-19
11G0566 7-19
11G0569 7-19
11G0572 7-19
11G0577 7-19
11G0579 7-19
11G0616 7-19
11G0617 7-19
12G1695 7-29
12G1696 7-29
12G6509 7-29
12G7360 7-3
13A0296 7-29
13A0297 7-29
56P0161 7-29
56P0162 7-29
56P9500 7-35
56P9501 7-47
56P9502 7-5, 7-23
56P9503 7-17, 7-37
56P9504 7-17, 7-37
56P9505 7-17, 7-37
56P9506 7-39
56P9507 7-17, 7-39
56P9508 7-39
56P9509 7-39
56P9510 7-39
56P9511 7-17, 7-39
56P9512 7-17
56P9513 7-39
56P9514 7-39
56P9515 7-17, 7-39
56P9516 7-17, 7-39
56P9517 7-17, 7-39
56P9518 7-17, 7-39
56P9519 7-17, 7-39
56P9520 7-17
56P9521 7-17, 7-37
56P9522 7-17, 7-37
56P9523 7-17
56P9524 7-19, 7-37
56P9525 7-41, 7-43
56P9526 7-43
56P9527 7-43
56P9528 7-47, 7-53, 7-55
56P9529 7-49
56P9530 7-49, 7-51
56P9531 7-3
56P9532 7-3
56P9533 7-3
56P9534 7-3
56P9535 7-3
56P9536 7-3
56P9537 7-3
56P9538 7-3
56P9539 7-3
56P9540 7-3
56P9541 7-51
56P9542 7-3
56P9543 7-3
56P9544 7-3
56P9545 7-3
56P9546 7-3
56P9547 7-3
56P9548 7-3

56P9549 7-3
56P9550 7-3
56P9551 7-3
56P9554 7-3
56P9555 7-3
56P9556 7-3
56P9557 7-5
56P9558 7-5
56P9559 7-5
56P9560 7-5
56P9561 7-5
56P9562 7-5
56P9563 7-5
56P9564 7-5
56P9565 7-5
56P9566 7-7
56P9567 7-7
56P9568 7-7
56P9569 7-7
56P9570 7-7
56P9571 7-7
56P9572 7-7
56P9573 7-7
56P9574 7-7
56P9575 7-7
56P9576 7-7
56P9577 7-7
56P9578 7-7
56P9579 7-7
56P9580 7-7
56P9581 7-7
56P9582 7-7
56P9583 7-7
56P9584 7-9
56P9587 7-11
56P9588 7-11
56P9589 7-11
56P9590 7-11
56P9591 7-13
56P9592 7-13
56P9593 7-15
56P9594 7-13
56P9595 7-13
56P9596 7-13
56P9597 7-13
56P9598 7-13
56P9599 7-15
56P9600 7-13
56P9601 7-13
56P9602 7-13
56P9603 7-13
56P9604 7-15
56P9605 7-15
56P9606 7-15
56P9607 7-15
56P9608 7-13
56P9609 7-13
56P9610 7-15
56P9611 7-13
56P9612 7-13
56P9613 7-13
56P9614 7-13
56P9615 7-13
56P9616 7-13
56P9617 7-13
56P9618 7-13
56P9619 7-15
56P9620 7-13
56P9621 7-15
56P9622 7-15
56P9623 7-15
56P9624 7-13
56P9625 7-13
56P9626 7-13
56P9627 7-13
56P9628 7-13
56P9629 7-15
56P9630 7-13
56P9637 7-13
56P9638 7-13
56P9639 7-15
56P9641 7-17
56P9642 7-17
56P9643 7-17
56P9644 7-17
56P9645 7-17
56P9646 7-19
56P9648 7-17
56P9649 7-17
56P9650 7-17
56P9651 7-17
56P9652 7-17
56P9653 7-17
56P9654 7-17

56P9655 7-19
56P9656 7-19
56P9657 7-19
56P9658 7-19
56P9659 7-17
56P9660 7-17
56P9661 7-19
56P9662 7-19
56P9663 7-17
56P9664 7-17
56P9665 7-17
56P9666 7-21
56P9667 7-21
56P9668 7-21
56P9669 7-21
56P9670 7-21
56P9671 7-21
56P9672 7-21
56P9673 7-21
56P9674 7-23
56P9675 7-23
56P9676 7-23
56P9677 7-23
56P9678 7-23
56P9679 7-23
56P9680 7-23
56P9681 7-23
56P9682 7-23
56P9683 7-23
56P9684 7-23
56P9685 7-23
56P9686 7-23
56P9687 7-23
56P9688 7-23
56P9689 7-23
56P9690 7-23
56P9691 7-23
56P9692 7-23
56P9693 7-23
56P9694 7-23
56P9695 7-23
56P9696 7-23
56P9697 7-23
56P9698 7-25
56P9699 7-25
56P9700 7-25
56P9701 7-25
56P9702 7-25
56P9703 7-25
56P9704 7-25
56P9705 7-25
56P9706 7-25
56P9707 7-25
56P9708 7-25
56P9709 7-25
56P9710 7-25
56P9711 7-25
56P9712 7-25
56P9713 7-25
56P9714 7-27
56P9715 7-27
56P9716 7-13
56P9717 7-13
56P9718 7-13
56P9719 7-29
56P9720 7-13
56P9722 7-25
56P9723 7-25
56P9724 7-27
56P9725 7-27
56P9726 7-27
56P9727 7-27
56P9728 7-25
56P9729 7-25
56P9730 7-25
56P9731 7-25
56P9732 7-25
56P9734 7-25
56P9736 7-3, 7-29
56P9737 7-25
56P9738 7-25
56P9739 7-25
56P9740 7-25
56P9741 7-25
56P9742 7-25
56P9745 7-29
56P9746 7-29
56P9747 7-29
56P9748 7-29
56P9749 7-29
56P9750 7-29
56P9751 7-33
56P9752 7-33
56P9753 7-35

56P9754 7-35
56P9755 7-35
56P9756 7-35
56P9757 7-35
56P9758 7-35
56P9759 7-35
56P9760 7-35
56P9761 7-35
56P9762 7-35
56P9763 7-35
56P9764 7-35
56P9765 7-37
56P9766 7-37
56P9767 7-37
56P9768 7-37
56P9769 7-37
56P9770 7-37
56P9771 7-37
56P9772 7-37
56P9773 7-37
56P9774 7-37
56P9775 7-37
56P9776 7-37
56P9777 7-37
56P9778 7-37
56P9779 7-37
56P9780 7-37
56P9781 7-39
56P9782 7-39
56P9783 7-39
56P9784 7-39
56P9785 7-39
56P9786 7-39
56P9787 7-39
56P9788 7-39
56P9789 7-39
56P9790 7-39
56P9791 7-39
56P9792 7-39
56P9793 7-39
56P9794 7-39
56P9795 7-39
56P9796 7-39
56P9797 7-39
56P9798 7-41
56P9799 7-41
56P9800 7-41
56P9803 7-41
56P9804 7-41
56P9805 7-41
56P9806 7-41
56P9807 7-41
56P9808 7-43
56P9809 7-43
56P9810 7-43
56P9811 7-43
56P9812 7-43
56P9813 7-43
56P9814 7-43
56P9815 7-43
56P9816 7-43
56P9817 7-43
56P9818 7-43
56P9819 7-43
56P9820 7-43
56P9821 7-43
56P9822 7-43
56P9823 7-43
56P9824 7-43
56P9825 7-43
56P9826 7-43
56P9827 7-43
56P9828 7-43
56P9829 7-43
56P9830 7-43
56P9831 7-43
56P9832 7-43
56P9833 7-45
56P9834 7-45
56P9835 7-45
56P9836 7-45
56P9837 7-45
56P9838 7-45
56P9839 7-45
56P9840 7-45
56P9841 7-45
56P9842 7-45
56P9843 7-45
56P9844 7-47
56P9845 7-47
56P9846 7-47
56P9847 7-47
56P9848 7-47
56P9849 7-47

56P9850 7-47
56P9851 7-47
56P9852 7-47
56P9853 7-49
56P9854 7-49
56P9855 7-49
56P9856 7-49
56P9857 7-49
56P9858 7-49
56P9859 7-49
56P9861 7-51
56P9862 7-51
56P9863 7-51
56P9864 7-51
56P9865 7-51
56P9866 7-51
56P9867 7-51
56P9868 7-51
56P9869 7-51
56P9870 7-51
56P9871 7-51
56P9872 7-51
56P9873 7-51
56P9874 7-51
56P9875 7-51
56P9876 7-51
56P9877 7-51
56P9878 7-51
56P9879 7-51
56P9880 7-51
56P9882 7-53
56P9883 7-53
56P9884 7-53
56P9885 7-53
56P9886 7-53
56P9887 7-53
56P9888 7-53
56P9889 7-55
56P9890 7-55
56P9891 7-55
56P9892 7-55
56P9893 7-55
56P9894 7-55
56P9897 7-29
56P9898 7-23
56P9899 7-23
56P9904 7-29
56P9905 7-3
56P9910 7-29
56P9911 7-29
56P9912 7-29
56P9913 7-29
56P9914 7-29
56P9915 7-55
56P9916 7-29
56P9926 7-31
56P9927 7-31
56P9928 7-31
56P9929 7-31
56P9930 7-31
56P9932 7-31
56P9933 7-29
56P9934 7-29
56P9940 7-45
56P9941 7-47
99A0424 7-29
99A0545 7-29
99A0560 7-29
99A0629 7-29
99A2489 7-29