brother®

Brother Laser Printer
SERVICE MANUAL

MODEL: HL-5130/5140/5150D/5170DN

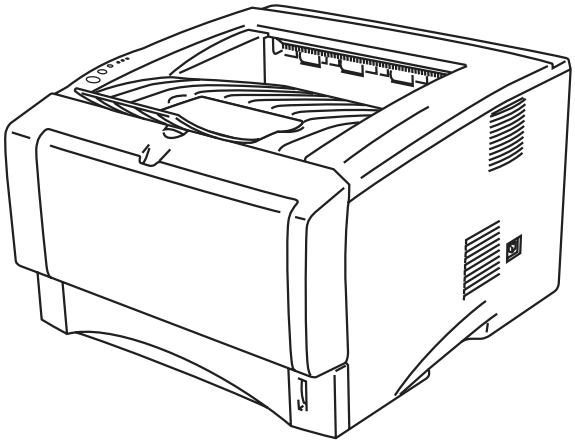

Read this manual thoroughly before maintenance work.

Keep this manual in a convenient place for quick and easy reference at all times.

December 2003
SM-PRN051

© Copyright Brother Industries, Ltd. 2003

All rights reserved.

No part of this publication may be reproduced in any form or by any means without permission in writing from the publisher.

Specifications are subject to change without notice.

Trademarks:

The brother logo is a registered trademark of Brother Industries, Ltd.

Apple, the Apple Logo, and Macintosh are trademarks, registered in the United States and other countries, and TrueType is a trademark of Apple computer, Inc.

Epson is a registered trademark and FX-80 and FX-850 are trademarks of Seiko Epson Corporation.

Hewlett Packard is a registered trademark and HP LaserJet is a trademark of Hewlett Packard Company.

IBM, IBM PC and Proprinter are registered trademarks of International Business Machines Corporation.

Microsoft and MS-DOS are registered trademarks of Microsoft Corporation.

Windows is a registered trademark of Microsoft Corporation in the U.S. and other countries.

PREFACE

This service manual contains basic information required for after-sales service of the laser printer (hereinafter referred to as "this machine" or "the printer"). This information is vital to the service technician to maintain the high printing quality and performance of the printer.

This service manual covers the **HL-5130/5140/5150/5170N** printers.

This manual consists of the following chapters:

CHAPTER 1: GENERAL
Features, specifications, etc.

CHAPTER 2: INSTALLATION AND BASIC OPERATION
Installation conditions, Installation procedures, basic operation of the printer etc.

CHAPTER 3: THEORY OF OPERATION
Basic operation of the mechanical system, the electrical system and the electrical circuits and their timing information.

CHAPTER 4: DISASSEMBLY AND RE-ASSEMBLY
Procedures for disassembling and re-assembling the mechanical system.

CHAPTER 5: PERIODIC MAINTENANCE
Periodical replacements parts, consumable parts, etc.

CHAPTER 6: TROUBLESHOOTING
Reference values and adjustments, troubleshooting image defects, troubleshooting malfunctions, etc.

CHAPTER 7: SERVICE SUPPORT SOFTWARE
Test print mode and Service menu mode, etc.

APPENDICS: PCB circuit diagrams, etc.

Information in this manual is subject to change due to improvement or redesign of the product. All relevant information in such cases will be supplied in service information bulletins (Technical Information).

A thorough understanding of this printer, based on information in this service manual and service information bulletins, is required for maintaining its print quality performance and for improving the practical ability to find the cause of problems.

TABLE OF CONTENTS

REGULATION.....viii

SAFETY INFORMATION.....x

CHAPTER 1 GENERAL 1-1

1. FEATURES 1-1
2. OVERVIEW 1-4
3. SPECIFICATIONS..... 1-5
   - 3.1 Printing 1-5
   - 3.2 Functions..... 1-6
   - 3.3 Electrical and Mechanical 1-7
   - 3.4 Network 1-8
   - 3.5 Paper..... 1-9
     - 3.5.1 Feedable paper 1-9
     - 3.5.2 Paper tray capacity 1-11
     - 3.5.3 Print delivery 1-11
   - 3.6 Printing Area 1-13
     - 3.6.1 PCL5e/EPSON/IBM emulation..... 1-13
     - 3.6.2 PCL6/BR-Script3 emulation 1-16
   - 3.7 Print Speeds with Various Settings..... 1-17
   - 3.8 Toner Cartridge Weight Information 1-18
4. SERIAL NO. DESCRIPTIONS..... 1-19

CHAPTER 2 INSTALLATION AND BASIC OPERATION..... 2-1

1. CONDITIONS REQUIRED FOR INSTALLATION 2-1
   - 1.1 Power Supply 2-1
   - 1.2 Environment..... 2-1
   - 1.3 System Requirements for Brother Printer Solution for Windows® 2-2
2. UNPACKING 2-3
3. INSTALL THE PRINTER 2-4
   - 3.1 For All Users 2-4
     - 3.1.1 Install the drum unit assembly..... 2-5
     - 3.1.2 Load paper into the paper tray 2-5
     - 3.1.3 Print a test page..... 2-6
   - 3.2 For Windows® Users..... 2-7
   - 3.3 For Macintosh Users..... 2-11
4. PRINTING METHODS..... 2-14
   - 4.1 Printing from the Paper Tray..... 2-14
   - 4.2 Printing from manual feed Tray (HL-5130/5140 only) 2-14
   - 4.3 Printing from Multi-purpose Tray (MP Tray) (HL-5150D/5170DN only) 2-15
   - 4.4 Printing on envelopes 2-17
   - 4.5 Printing on transparencies 2-21

4.6 Printing on Both Sides of the Paper (manual duplex printing) 2-24
4.7 Paper orientation for printing on both sides of the paper 2-26
4.8 Printing on both sides of the paper (automatic duplex printing) 2-27
5. CONTROL PANEL OPERATION 2-28
5.1 Control Panel Buttons & LED functions 2-28
5.1.1 LEDs 2-28
5.1.2 Control Panel Buttons 2-28
5.2 LED Indiations 2-29
5.3 Service call indications 2-31
5.4 Control Panel Button Operations 2-32
5.5 Other Control Features 2-33
5.5.1 Sleep mode 2-33
5.5.2 Print a test page 2-34
5.5.3 Print Settings 2-34
5.5.4 Print fonts (For HL-5140, HL-5150D and HL-5170DN) 2-35
6. NETWORK FUNCTIONS 2-36
6.1 LED functions 2-36
6.2 Network Factory default setting (For HL-5170DN) 2-36
7. PAPER TRAY INFORMATION (FOR EUROPE ONLY) 2-37

CHAPTER 3 THEORY OF OPERATION 3-1

1. ELECTRONICS 3-1
1.1 General Block Diagram 3-1
1.2 Main PCB Block Diagram 3-2
1.3 Main PCB 3-3
1.3.1 CPU 3-3
1.3.2 USB 3-5
1.3.3 IEEE 1284 3-6
1.3.4 Network Interface 3-7
1.3.5 ROM 3-8
1.3.6 Flash ROM 3-9
1.3.7 SDRAM 3-10
1.3.8 Optional RAM 3-11
1.3.9 EEPROM 3-13
1.3.10 Reset Circuit 3-13
1.3.11 Engine I/O 3-14
1.3.12 Panel I/O 3-14
1.3.13 Video I/O 3-15
1.3.14 Power Supply 3-16
1.4 Engine PCB 3-17
1.5 Power Supply 3-18
1.5.1 Low-voltage Power Supply 3-18
1.5.2 High-voltage Power Supply 3-19
2. MECHANICS 3-20
2.1 Overview of Printing Mechanism 3-20
2.2 Paper Transfer 3-21
2.2.1 Paper supply 3-21

2.2.2 Paper registration 3-21
2.2.3 Paper eject 3-22
2.2.4 Duplex printing (HL-5150D/HL-5170DN only) 3-22
2.3 Sensors 3-23
2.3.1 Cover sensors 3-23
2.3.2 Toner sensors 3-23
2.3.3 Cassette sensor / Paper empty sensor (HL-5140/5150D/5170DN only) 3-24
2.3.4 Paper eject sensor 3-24
2.3.5 MP PE sensor (HL-5150D/HL-5170DN) 3-25
2.3.6 DX sensor (HL-5150D/HL-5170DN) 3-25
2.3.7 Regist sensor 3-26
2.3.8 Rear cover sensor (HL-5150D/5170DN) 3-26
2.4 Drum Unit 3-27
2.4.1 Photosensitive drum 3-27
2.4.2 Primary charger 3-27
2.4.3 Transfer roller 3-27
2.4.4 Cleaner 3-27
2.5 Toner Cartridge 3-27
2.6 Print Process 3-27
2.6.1 Charging 3-27
2.6.2 Exposure stage 3-28
2.6.3 Developing 3-29
2.6.4 Transfer 3-29
2.6.5 Fixing stage 3-30

CHAPTER 4 DISASSEMBLY AND RE-ASSEMBLY 4-1

1. SAFETY PRECAUTIONS 4-1
2. DISASSEMBLY FLOW 4-2
3. DISASSEMBLY PROCEDURE 4-3
3.1 AC Cord 4-3
3.2 Drum Unit 4-3
3.3 Paper Tray 4-4
3.4 DX Feed ASSY 4-14
3.5 Access Cover 4-17
3.6 Rear Cover C 4-17
3.7 Outer Chute (for HL-5130/5140 only) 4-18
3.8 Rear Cover MP ASSY /Outer Chute MP ASSY (for HL-5150D/5170DN only) 4-19
3.9 Rear Cover L/R 4-20
3.10 Side Cover L/R 4-21
3.11 Top Cover 4-22
3.12 Front Cover ASSY (for HL-5130/5140 only) 4-25
3.13 MP Unit (for HL-5150D/5170DN only) 4-26
3.14 Fixing Unit 4-32
3.15 Rear Cover Sensor (HL-5150D/5170DN) 4-41
3.16 Laser Unit 4-41
3.17 Main PCB 4-43
3.18 Base Plate/ LV Insulation Sheet 4-45
3.19 DX-Sensor PCB ASSY (HL-5150D/5170DN) 4-46
3.20 Engine PCB 4-47

3.21 High-voltage PS PCB ASSY 4-48
3.22 Low-voltage PS PCB ASSY 4-48
3.23 Paper Feeder 4-50
3.24 Frame L/ Drive Unit 4-58
3.25 Fan Motor 60 Unit LV/ Fan Motor 60 Unit 4-62
3.26 Frame R 4-63
4. PACKING 4-65
5. LUBRICATION 4-66
6. GUIDELINES FOR LEAD FREE SOLDER 4-68

CHAPTER 5 PERIODIC MAINTENANCE 5-1

1. CONSUMABLE PARTS 5-1
1.1 Drum Unit 5-1
1.2 Toner Cartridge 5-3
2. PERIODICAL REPLACEMENT PARTS 5-8
2.1 Fixing Unit 5-9
2.2 Paper Feeding Kit 5-12
3. PERIODICAL CLEANING 5-14
3.1 Cleaning the Printer Exterior 5-14
3.2 Cleaning the Drum Unit 5-14
3.3 Cleaning the Scanner Window 5-15
3.4 Cleaning the Electrical Terminals 5-16
4. MTBF / MTTR 5-17

CHAPTER 6 TROUBLESHOOTING 6-1

1. INTRODUCTION 6-1
1.1 Initial Check 6-1
1.2 Warnings for Maintenance Work 6-2
1.3 Identify the Problem 6-3
2. OPERATOR CALLS & SERVICE CALLS 6-4
2.1 Operator Calls 6-4
2.2 Service Calls 6-5
3. ERROR MESSAGE 6-6
3.1 Error Message in the Status Monitor 6-6
3.2 Error Message Printouts 6-7
4. PAPER PROBLEMS 6-8
4.1 Paper Loading Problems 6-8
4.2 Paper Jams 6-9
4.2.1 Clearing jammed paper 6-9
4.2.2 Causes & countermeasures 6-13
4.3 Paper Feeding Problems 6-14
5. SOFTWARE SETTING PROBLEMS 6-16
6. MALFUNCTIONS 6-19
7. IMAGE DEFECTS 6-24

7.1 Image Defect Examples 6-24
7.2 Diameter of Rollers 6-24
7.3 Troubleshooting Image Defect 6-25
7.4 Location of Grounding Contacts 6-44
7.4.1 Drum unit 6-44
7.4.2 Printer body & Paper tray 6-44
8. INCORRECT PRINTOUT 6-45
9. NETWORK PROBLEM 6-48
9.1 Installation Problem 6-48
9.2 Intermittent Problem 6-49
9.3 TCP/IP Troubleshooting 6-50
9.4 UNIX Troubleshooting 6-50
9.5 Windows NT/LAN Server (TCP/IP) Troubleshooting 6-51
9.6 Windows 95/98/Me (or later) Peer to Peer Print (LPR) Troubleshooting 6-51
9.7 Windows 95/98/Me (or later) Peer to Peer (HP JetAdmin Compatible Method) Troubleshooting. 6-52
9.8 Windows 95/98/Me/NT 4.0/2000 (or later) Peer to Peer Print (NetBIOS) Troubleshooting 6-52
9.9 Brother Internet Print (TCP/IP) Troubleshooting 6-52
9.10 Windows 95/98/Me/2000/XP IPP Troubleshooting 6-53
9.11 Novell Netware Troubleshooting 6-53
9.12 AppleTalk Troubleshooting 6-54
9.13 DLC/LLC Troubleshooting 6-54
9.14 Web Browser Troubleshooting (TCP/IP) 6-54

CHAPTER 7 SERVICE SUPPORT SOFTWARE 7-1

1. CONTROL PANEL 7-1
1.1 Test Print Mode 7-1
1.2 Service Mode 7-2
1.3 Inspection Mode 7-3
2. HOW TO KNOW DRUM UNIT LIFE & PAGE COUNTER 7-5
3. HOW TO USE THE SELF-DIAGNOSTICS TOOLS 7-8
4. NVRAM DEFAUT VALUE 7-12
5. HOW TO REWRITE HL-5130/5140/5150D/5170DN FLASH ROM 7-13

APPENDICES

1. MAIN PCB CIRCUIT DIAGRAM, HL-5130/5140/5150D (1/3) A-1
2. MAIN PCB CIRCUIT DIAGRAM, HL-5130/5140/5150D (2/3) A-2
3. MAIN PCB CIRCUIT DIAGRAM, HL-5130/5140/5150D (3/3) A-3
4. MAIN PCB CIRCUIT DIAGRAM, HL-5170DN (1/4) A-4
5. MAIN PCB CIRCUIT DIAGRAM, HL-5170DN (2/4) A-5
6. MAIN PCB CIRCUIT DIAGRAM, HL-5170DN (3/4) A-6
7. MAIN PCB CIRCUIT DIAGRAM, HL-5170DN (4/4) A-7

8. POINT TO POINT CONNECTION DIAGRAM A-8
9. ENGINE PCB CIRCUIT DIAGRAM (1/2) A-9
10. ENGINE PCB CIRCUIT DIAGRAM (2/2) A-10
11. LOW-VOLTAGE POWER SUPPLY PCB CIRCUIT DIAGRAM (120V) A-11
12. LOW-VOLTAGE POWER SUPPLY PCB CIRCUIT DIAGRAM (230V) A-12
13. HIGH-VOLTAGE POWER SUPPLY PCB CIRCUIT DIAGRAM A-13
14. HARNESS ROUTING A-14

REGULATION

LASER SAFETY (110 - 120V MODEL ONLY)

This printer is certified as a Class I laser product under the US Department of Health and Human Services (DHHS) Radiation Performance Standard according to the Radiation Control for Health and Safety Act of 1968. This means that the printer does not produce hazardous laser radiation.

Since radiation emitted inside the printer is completely confined within the protective housing and external covers. the laser beam cannot escape form the machine during any phase of user operation.

FDA REGULATIONS (110 - 120V MODEL ONLY)

The US Food and Drug Administration (FDA) has implemented regulations for laser products manufactured on and after August 2, 1976. Compliance is mandatory for products marketed in the United States. One of the following labels on the back of the printer indicates compliance with the FDA regulations and must be attached to laser products marketed in the United States.

The label for Japanese manufactured products

MANUFACTURED: BROTHER INDUSTRIES, LTD. 15-1, Naeshiro-cho, Mizuho-ku, Nagoya 467-8561, Japan. This product complies with FDA radiation performance standards, 21 CFR Subchapter J.	K

The label for Chinese manufactured products

MANUFACTURED: BROTHER Corporation (Asia) Ltd. Shenzen Buji Nan Ling Factory Gold Garden Ind., Nan Ling Village, Buji, Rong Gang, Shenzen, CHINA This product complies with FDA radiation performance standards, 21 CFR Subchapter J.	C

Caution
Use of controls, adjustments or performance of procedures other than those specified in this manual may result in hazardous radiation exposure.

IEC 825 (220-240V MODEL ONLY)

This printer is a Class I laser product as defined in IEC 825 specifications. The label shown below is attached in countries where required.

This printer has a laser diode which emits invisible laser radiation in the Laser Unit. The Laser Unit should not be opened without disconnecting the two connectors connected with the AC power supply and laser unit. Since the variable resistor in the laser unit is adjusted in accordance with the standards, never touch it.

Caution
Use of controls, adjustments or performance of procedures other than those specified in this manual may result in hazardous radiation exposure.

For Finland and Sweden
LUOKAN 1 LASERLAITE
KLASS 1 LASER APPARAT

Varoitus! Laitteen käyttäminen muulla kuin tässä käyttöohjeessa mainitulla tavalla saattaa altistaa käyttäjän turvallisuusluokan 1 ylittävälle näkymättömälle lasersäteilylle.

Varning – Om apparaten används på annat sätt än i denna Bruksanvisning specificerats, kan användaren utsättas för osynlig laserstrålning, som överskrider gränsen för laserklass 1.

SAFETY INFORMATION

CAUTION FOR LASER PRODUCT (WARNHINWEIS FUR LASER DRUCKER)

CAUTION: When the machine during servicing is operated with the cover open, the regulations of VBG 93 and the performance instructions for VBG 93 are valid.

CAUTION: In case of any trouble with the laser unit, replace the laser unit itself. To prevent direct exposure to the laser beam, do not try to open the enclosure of the laser unit.

ACHTUNG: Im Falle von Störungen der Lasereinheit muß diese ersetzt werden. Das Gehäuse der Lasereinheit darf nicht geöffnet werden, da sonst Laserstrahlen austreten können.

<Location of the laser beam window>

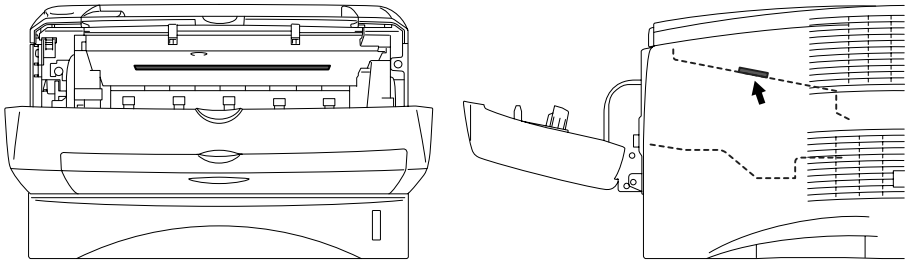

ADDITIONAL INFORMATION

When servicing the optical system of the printer, be careful not to place a screwdriver or other reflective object in the path of the laser beam. Be sure to take off any personal accessories such as watches and rings before working on the printer. A reflected beam, though invisible, can permanently damage the eyes.

Since the beam is invisible, the following caution label is attached on the laser unit.

DEFINITIONS OF WARNINGS, CAUTIONS AND NOTES

The following conventions are used in this service manual:

WARNING

Indicates warnings that must be observed to prevent possible personal injury.

CAUTION:

Indicates cautions that must be observed to service the printer properly or prevent damage to the printer.

NOTE:

Indicates notes and useful tips to remember when servicing the printer.

**Listed below are the various kinds of “WARNING” messages included in this manual.

WARNING

Always turn off the power switch and unplug the power cord from the power outlet before accessing any parts inside the printer.

WARNING

Some parts inside the printer are extremely hot immediately after the printer is used. When opening the front cover or back cover to access any parts inside the printer, never touch the shaded parts shown in the following figures.

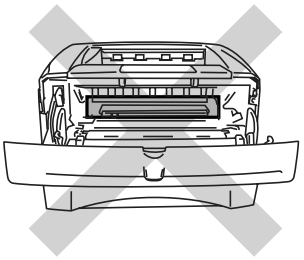

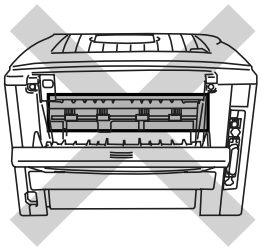

WARNING

If you analyze malfunctions with the power plug inserted into the power outlet, special caution should be exercised even if the power switch is OFF because it is a single pole switch.

CHAPTER 1 GENERAL

1. FEATURES

This printer has the following features;

High Resolution and Fast Print Speed

True 600 x 600 dots/ true 300 x 300 dots per inch (dpi) and HQ1200 for graphics with microfine toner and up to 17 (HL-5130)/ 20 (HL-5140/5150D/5170DN) pages per minute (ppm) print speed for A4 and 18 (HL-5130)/ 21 (HL-5140/5150D/5170DN) pages per minute (ppm) print speed for Letter- size paper.

Versatile Paper Handling

The printer loads paper automatically from the paper tray. The paper tray can hold A4, letter, B5 (ISO), A5, B6 (ISO), A6, Executive and Legal size of paper. The manual feed tray (HL-5130/5140) allows manual paper loading sheet by sheet so you can use a variety of types and sizes of paper. The multi-purpose tray (HL-5150D/5170DN) also allows you to use a variety of types and sizes of paper.

Front Operation

Basic operation of the printer can be controlled from the control panel.

Enhanced Printing Performance and User-Friendly Operation for Windows®

The dedicated printer driver for Microsoft® Windows® 95/98/Me, Windows® NT 4.0 and Windows® 2000/XP are available on the CD-ROM supplied with your printer. You can easily install them into your Windows® system using our installer program. The driver supports our unique compression mode to enhance printing speed in Windows® applications and allows you to choose various printer settings including toner save mode, custom paper size, sleep mode, gray scale adjustment, resolution, water mark and many layout functions. You can easily setup these print options through the Printer Setup Menu.

Printer Status Monitor with Bi-directional Parallel Interface

The printer driver can monitor the status of your printer using bi-directional parallel communications. IEEE-1284 bi-directional parallel printer cable is recommended.

The printer status monitor program can show the current status of your printer. When printing, the animated dialog box appears on your computer screen to show the current printing process. If an error occurs, a dialog box will appear to let you know what to correct. If you have turned on the interactive Help (Windows only) you can get visual guidance on your PC screen on the actions in the event of certain printer errors. The default setting is OFF.

Quick Print Setup

The Quick Print Setup is a convenient utility to allow you to make changes to frequently used driver settings easily without having to open the printer properties selection box every time. It is launched automatically when this printer driver is selected. You can change the settings by clicking on the icon with the right mouse button. The default setting is OFF.

Enhanced Memory Management

The printer provides its own data compression technology in its printer hardware and the supplied printer driver software, which can automatically compress graphic data and font data efficiently into the printer's memory. You can avoid memory errors and print most full page 600 dpi graphic and text data, including large fonts, with the standard printer memory.

USB Interface (for Windows® 98/Me/2000/XP, iMac and Power Macintosh)

The printer can be connected using the Universal Serial Bus (USB) interface to a PC or Mac which has a USB interface. Drivers that allow you to use the USB port are provided on the CD-ROM supplied with the printer.

Popular Printer Emulation Support (HL-5140/5150D/5170DN only)

These printers support the following printer emulation modes;
HP LaserJet (PCL6), PostScript® Level 3 language emulation (Brother BR-Script Level 3), Epson FX-850 and IBM Proprinter XL.
HL-5140:only HP LaserJet (PCL6)
When you use DOS application software or Windows® version 3.0 or earlier, you can use any of these emulations to operate the HL-5150D/5170DN printers. The printers also support auto-emulation switching between HP, Brother BR-Script 3 and Epson or HP, BR-Script 3 and IBM. If you want to set the printer emulation, you can do it using the Remote Printer Console Program.

High Resolution Control

High Resolution Control (HRC) technology provides clear and crisp printouts. Use this function to get smooth text print quality. (300 dpi, 600dpi only)

Environment-Friendly

<Economy Printing Mode>
This feature will cut your printing cost by saving toner. It is useful for obtaining draft copies for proof-reading. You can select the toner saving economy mode through the Windows® printer driver supplied with your printer.

<Sleep Mode (Power Save Mode)>
Sleep mode automatically reduces power consumption when the printer is not in use for a certain period of time. The printer consumes less than 5W(HL-5130/5140/5150D), 6W(HL-5170DN) when in sleep mode.

<Low Running Cost>

Since the toner cartridge is separate from the drum unit, you need to replace only the toner cartridge after printing around 6,700 (High-yield toner cartridge)/ 3,500 (Standard toner cartridge) pages at 5% coverage for A4 paper for the standard cartridge, which is both cost effective and ecologically friendly.

Bar Code Print (HL-5140/5150D/5170DN only)

The printer can print the following 11 types of bar codes;

- Code 39
- Code 128
- Interleaved 2 of 5
- Codabar
- US-PostNet
- ISBN
- UPC-A
- UPC-E
- EAN-8
- EAN-13
- EAN-128

Network Feature (for HL-5170DN only)

The Brother printer has built in multi protocol network capability as standard. This allows multiple host computers to share the printer on a 10/100Mbps Ethernet network. Any users can print their jobs as if the printer was directly connected to their computer. Users on Windows® 95/98/Me, Windows® NT, Windows® 2000/XP, UNIX, Novell, Apple Macintosh, LAN server and OS/2 Warp server computer simultaneously can access this printer. For further information, see the Network User's Guide supplied with the printer.

Duplex printing (HL-5150D/HL-5170DN only)

This printer has duplex function as standard. You can print on both sides of paper by using this function.

2. OVERVIEW

<Front View>

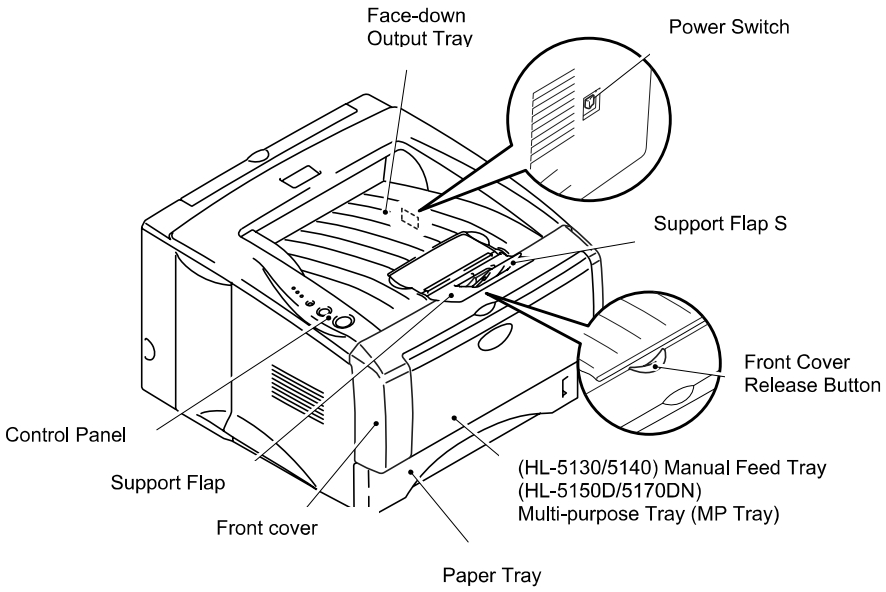

*The printer illustration is based on HL-5150D and HL-5170DN.

Fig. 1-1

<Rear View>

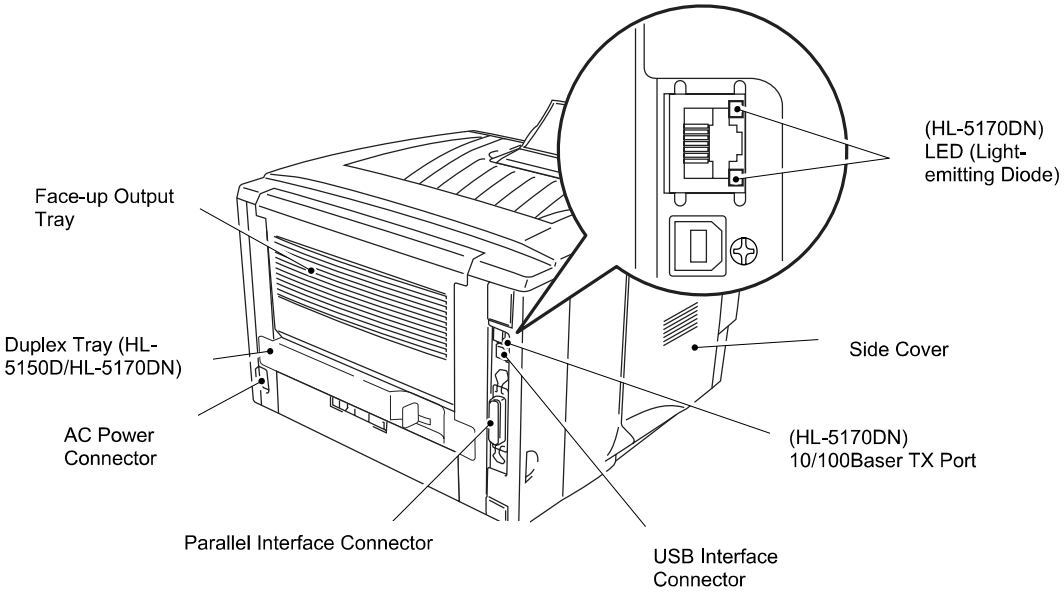

*The printer illustration is based on HL-5170DN.

Fig. 1-2

3. SPECIFICATIONS

3.1 Printing

Print method	Electrophotography by semiconductor laser beam scanning	
Laser	Wavelength:	780 nm
	Output:	5mW max
Resolution	HQ1200 (for Windows® 95/98/Me, WindowsNT® 4.0, Windows® 2000/XP, and Mac OS)	
	600 dpi (for Windows® 95/98/Me, WindowsNT® 4.0, Windows® 2000/XP, DOS and Mac OS)	
	300 dpi (for Windows® 95/98/Me, WindowsNT® 4.0, Windows® 2000/XP, and Mac OS)	
Print quality	Normal printing mode Economy printing mode (Toner saving mode)	
	Print speed	Normal: Up to 17 pages/minute (A4) (HL-5130) Up to 20 pages/minute (A4) (HL-5140/5150D/5170DN) Up to 18 pages/minute (Letter-size paper) (HL-5130) Up to 21 pages/minute (Letter-size paper) (HL-5140/5150D/5170DN)
Warm-up	Max. 18 seconds at 23°C (73.4°F)	
First print	Max. 10 seconds (when loading A4 or Letter-size paper from the standard paper tray)	
Consumables	Toner cartridge Life expectancy:	(Standard cartridge) 3,500 pages/cartridge (High yield cartridge) 6,700 pages/cartridge
	(when printing A4 or Letter-size paper at 5% print coverage)	
	Drum unit Life expectancy:	20,000 pages/drum unit

**NOTE:*

Print speed varies depending on the paper size or media type. For details, refer to 3.7 'PRINT SPEEDS WITH VARIOUS SETTINGS' in this chapter.

3.2 Functions

CPU	Fujitsu SPARClite 133MHz
Emulation	<HL-5130> GDI <HL-5140> HP LaserJet (PCL level 6) <HL-5150D/5170DN> Automatic emulation selection among HP LaserJet (PCL level 6), Brother BR-Script Level 3, EPSON FX-850 or IBM Proprinter XL
Printer driver	<PCL Driver> Windows® 95/98/Me, Windows® NT 4.0, Windows® 2000/XP driver, supporting Brother Native Compression mode <PS Driver> PPD file driver for Windows® 95/98/Me, Windows NT® 4.0, Windows® 2000/XP driver and Macintosh driver <Others> • iMac, Power Macintosh with USB printer driver • Optional Macintosh driver available for System 6.0.7 or higher
Interface	• Bi-directional parallel • Hi-Speed USB 2.0 • 10/100 BaseTX Ethernet network interface (optional for HL-5140/5150D, standard for HL-5170DN)
Memory	HL-5130: 8 Mbytes HL-5140/5150D: 16 Mbytes HL-5170DN: 32 Mbytes Expandable up to 144 Mbytes for HL-5140/5150D and 160 Mbytes for HL-5170DN by installing an industry standard DIMM*
Control Panel	• Display LED: 4 LEDs • Buttons 2 buttons
Diagnostics	Self-diagnostic program

**NOTE:*

The DIMM must have the following specifications;

Type:	*100 pin*
Access time:	*60 nsec - 80 nsec*
Capacity:	*16, 32, 64, 128 Mbyte*
Height:	*35.0 mm (1.38 inches) or less*
Output:	*32 bit or 36 bit (independent of parity)*

3.3 Electrical and Mechanical

Power source	U.S.A. and Canada:	AC 110 to 120V, 50 Hz/60 Hz
	Europe and Australia:	AC 220 to 240V, 50 Hz/60 Hz
Power consumption	Printing (average):	460 W or less
	Standing by:	75 W or less
	Sleep*:	5 W or less (for HL-5130/5140/5150D) 6 W or less (for HL-5170DN)
Noise	Printing:	50dB
	Standing by:	30dB A or less
Temperature	Operating:	10 to 32.5°C (50 to 90.5°F)
	Non operating:	0 to 40°C (38 to 104°F)
	Storage:	-20 to 40°C (-4 to 104°F)
Humidity	Operating:	20 to 80% (non condensing)
	Storage:	10 to 85% (non condensing)
Dimensions (W x D x H)	382 x 383 x 252 mm (HL-5130/5140) (15.0x 15.1 x 9.9 inches)	
(W x D x H)	382 x 401 x 252 mm (HL-5150D/5170DN) (15.0x 15.8 x 9.9 inches)	
	*When the lower tray is installed, the total height (printer + lower tray) will be 353mm.	
Weight	HL-5130/5140: Approx. 10.5 kg (Included Toner and Drum) Approx. 9.1 kg (Excluded Toner and Drum) HL-5150D/5170DN: Approx. 11.9 kg (Included Toner and Drum) Approx. 10.5 kg (Excluded Toner and Drum)	

**NOTE:*

- *The power consumption figure quoted for sleep mode is when the fan has stopped.*

3.4 Network

Type / Speed	10/100 Base TX Ethernet Automatic negotiation
Protocols	TCP/IP (RARP, BOOTP, DHCP, APIPA, NetBIOS/WINS, SSDP, Simple Network Configuration Capabilities of Apple® Mac OS® X, LPR/LPD, Port9100, POP3/SMTP, SMB, IPP, FTP, TELNET, SNMP, HTTP, TFTP), Netware IPX/SPX (Bindery and NDS), Appletalk, DLC/LLC
Management	• Web Based Management (HTTPD) • BRAdmin Professional (using TCP/IP protocol or IPX/SPX) • SNMP, MIB II as well as Brother private MIB • TELNET command console • Web BRAdmin
Firmware update	Flash ROM based for Network module • Can be upgraded using TFTP/FTP • Can be upgraded using IPX/SPX • Easy upgrade using Brother BRAdmin Professional Utility
Supplied software	• BRAdmin Professional (for Windows® 95/98/ME, Windows®NT 4.0/Windows® 2000/XP) • Port driver for Windows® 95/98/ME, Windows®NT 4.0/Windows®2000/XP LPR port driver (for Windows® 95/98/ME/NT4.0) NetBIOS port driver (for Windows® 95/98/ME/NT4.0/2000/XP) SMTP port driver (for Windows® 95/98/ME/NT4.0/2000/XP) • Web BRAdmin (NOT supplied with CD-ROM. Available only on Web page. For more information on Web BRAdmin Professional, go to http://solutions.brother.com

3.5 Paper

3.5.1 Feedable paper

(1) Paper type

Paper type	Tray1	Manual feed tray	MP tray	Tray 2	Select the paper type from the printer driver
Plain paper 60 g/m^2 to 105 g/m^2 (16 to 28 lbs.)	O	O	O	O	Plain paper
Recycled paper	O	O	O	O	Plain paper
Bond paper		O	O		Bond paper
Thick paper 105 g/m^2 to 161 g/m^2 (28 to 43 lbs.)		O	O		Thick paper or thicker paper
Transparency	O Up to 10 sheets A4 or Letter	O A4 or Letter	O Up to 10 sheets A4 or Letter		Transparencies
Label		O A4 or Letter	O A4 or Letter		Thicker paper
Envelope		O	O Up to 3 envelopes		Envelopes or Env.Tick or Env.Thin
Card		O	O		Thick paper or thicker paper

(2) Paper size

	Tray 1	Manual feed tray	MP tray	Tray 2
Paper size	A4, Letter, Legal, , B5 (ISO), Executive, A5, A6, B6	Width: 69.9 to 215.9 mm (2.75 to 8.5 in.) Length: 116 to 406.4 mm (4.57 to 16.0 in.)	Width: 69.9 to 215.9 mm (2.75 to 8.5 in.) Length: 116 to 406.4 mm (4.57 to 16.0 in.)	A4, Letter, Legal, B5(ISO), Executive, A5

(3) Other paper specifications

<Paper tray>

	Cut sheet
Basis weight	60 to 105 g/m^2 (16 to 28 lb.)
Caliper	0.08 to 0.13 mm (0.003 to 0.005 in.)
Moisture content	4% to 6% by weight

<Multi-purpose tray>

	Cut sheet	Envelope
Basis weight	60 to 161 g/m^2 (16 to 43 lb.)	75 to 90 g/m^2 (20 to 24 lb.) single thickness
Caliper	0.08 to 0.2 mm (0.003 to 0.008 in.)	0.084 to 0.14 mm (0.003 to 0.005 in.) single thickness
Moisture content	4% to 6% by weight	4% to 6% by weight

(4) Recommended paper

	Europe	USA
Plain paper	Xerox Premier 80 g/m^2 Xerox Business 80 g/m^2 Modo DATACOPY 80 g/m^2 IGEPA X-Press 80 g/m^2	Xerox 4200DP 20 lb Hammermill Laser Paper 24 lb
Recycled paper	Xerox Recycled Supreme	
Transparency	3M CG3300	3M CG 3300
Label	Avery laser label L7163	Avery laser label #5160

*This printer can use recycled paper that meets the DIN 19309 specification.

CAUTION:

When you are choosing print media, be sure to follow the information given below to prevent any paper jams, print quality problems or printer damage;

- *It is recommended to use long-grained paper for the best print quality. If short-grained paper is being used, it might be the cause of paper jams.*
- *Use neutral paper. Do not use acid paper to avoid any damage to the drum unit.*
- *Avoid using coated paper such as vinyl coated paper.*
- *Avoid using preprinted or highly textured paper.*
- *It is recommended to use labels or transparencies which are designed for use in laser printers.*
- *Avoid feeding labels with the carrier sheet exposed, or the printer will be damaged.*
- *Before loading paper with holes such as organizer sheets, be sure to fan the stack well.*
- *Do not use organizer sheets that are stuck together. The glue that is used might caused damaged to the printer.*
- *When printing on the back of pre-printed paper, if the paper is curled, be sure to straighten the paper as much as possible.*
- *Different types of paper should not be loaded at the same time in the paper tray to avoid any paper jams or misfeeds.*

3.5.2 Paper tray capacity

	Tray 1	MP tray	Tray 2
Paper Capacity	250 sheets (80 g/m^2 or 21 lb)	50 sheets (80 g/m^2 or 21 lb)	250 sheets (80 g/m^2 or 21 lb)

* Manual feed tray: Single sheet

3.5.3 Print delivery

(1) Face down output tray

capacity: Maximum 150 sheets (80 g/m^2)
face down only

(2) Face up output tray

capacity: (HL-5150D/5170DN)
Maximum 25 sheets (80 g/m^2)
face up only
(HL-5130/5140)
Single sheet

NOTE:

Face-down: *Delivery with the printed face of the paper downwards.*
Face-up: *Delivery with the printed face of the paper upwards.*

(3) We recommend the following print methods (output tray) for each paper media type.

Media type	Paper output	
	Face down	Face up
Plain paper	O	O
Thick paper		O
Recycled paper	O	O
Transparency	O	
Label		O
Envelope		O
Card	O	O

3.6 Printable Area

3.6.1 PCL5e/EPSON/IBM emulation

When using PCL emulation, the edges of the paper that cannot be printed on are shown below.

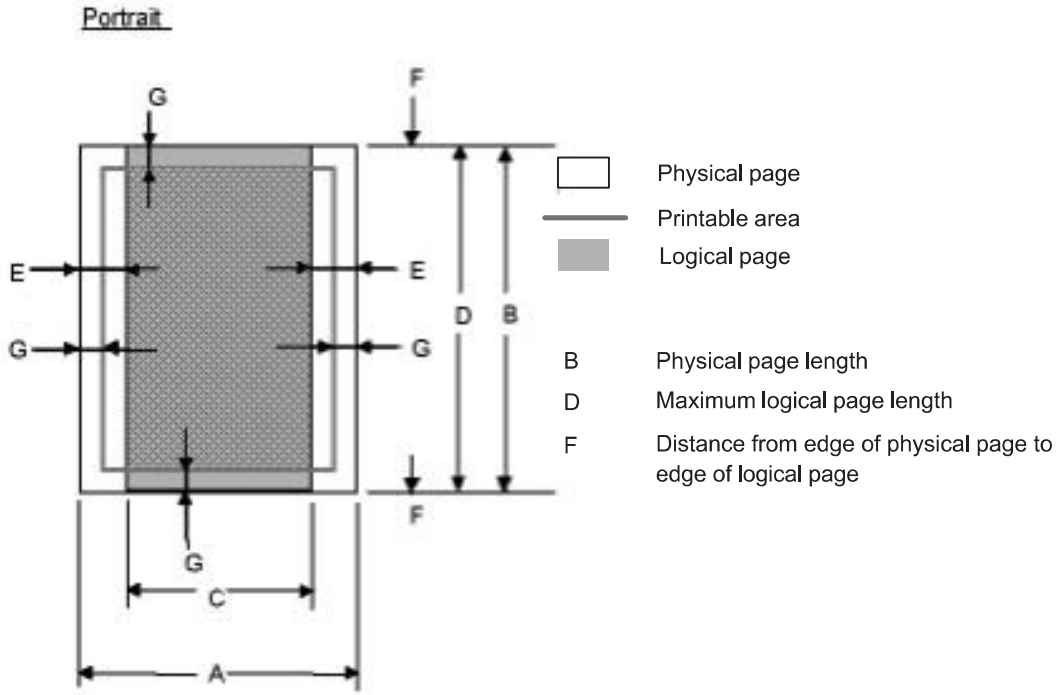

NOTE:

"Logical page" shows the printable area for a PCL driver.

"Printable area" shows mechanical printable area of the machine.

Therefore, the machine can only print within the shaded area when you use a PCL driver.

The table below shows the printable areas when printing on Portrait for each paper size.

Size	A	B	C	D	E	F	G
Letter	215.9 mm 8.5” (2,550 dots)	279.4 mm 11.0” (3,300 dots)	203.2 mm 8.0” (2,400 dots)	279.4 mm 11.0” (3,300 dots)	6.35 mm 0.25” (75 dots)	0 mm	4.2 mm 0.16” (50 dots)
Legal	215.9 mm 8.5” (2,550 dots)	355.6 mm 14.0” (4,200 dots)	203.2 mm 8.0” (2,400 dots)	355.6 mm 14.0” (4,200 dots)	↑	0 mm	4.2 mm 0.16” (50 dots)
Folio	215.9 mm 8.5” (2,550 dots)	330.2mm 13.0” (3,900 dots)	203.2 mm 8.0” (2,400 dots)	330.2mm 13.0” (3,900 dots)	↑	0 mm	4.2 mm 0.16” (50 dots)
Executive	184.15 mm 7.25” (2,175 dots)	266.7 mm 10.5” (3,150 dots)	175.7 mm 6.92” (2,025 dots)	266.7 mm 10.5” (3,150 dots)	6.35 mm 0.25” (75 dots)	0 mm	4.2 mm 0.16” (50 dots)
A 4	210.0 mm 8.27” (2,480 dots)	297.0 mm 11.69” (3,507 dots)	198.0 mm 7.79” (2,338 dots)	297.0 mm 11.69” (3,507 dots)	6.01 mm 0.24” (71 dots)	0 mm	4.2 mm 0.16” (50 dots)
A 5	148.5 mm 5.85” (1,754 dots)	210.0 mm 8.27” (2,480 dots)	136.5 mm 5.37” (1,612 dots)	210.0 mm 8.27” (2,480 dots)	↑	0 mm	4.2 mm 0.16” (50 dots)
A 6	105.0 mm 4.13” (1,240 dots)	148.5 mm 5.85” (1,754 dots)	93.0 mm 3.66” (1,098 dots)	148.5 mm 5.85” (1,754 dots)	↑	0 mm	4.2 mm 0.16” (50 dots)
B 5 (JIS)	182.0 mm 7.1” (2,130 dots)	257.0 mm 10.11” (3,033 dots)	170.0 mm 6.69” (2,007 dots)	257.0 mm 10.11” (3,033 dots)	↑	0 mm	4.2 mm 0.16” (50 dots)
B 5 (ISO)	176.0 mm 6.93” (2,078 dots)	250.0 mm 9.84” (2,952 dots)	164.0 mm 6.46” (1,936 dots)	250.0 mm 9.84” (2,952 dots)	↑	0 mm	4.2 mm 0.16” (50 dots)
B 6	125.0 mm 4.92” (1,476 dots)	176.0 mm 6.93” (2,078 dots)	164.0 mm 4.44” (1,334 dots)	176.0 mm 6.93” (2.078 dots)	↑	0 mm	4.2 mm 0.16” (50 dots)
COM10	104.78 mm 4.125” (1,237 dots)	241.3 mm 9.5” (2,850 dots)	92.11 mm 3.63” (1,087 dots)	241.3 mm 9.5” (2,850 dots)	6.35 mm 0.25” (75 dots)	0 mm	4.2 mm 0.16” (50 dots)
MONARCH	98.43 mm 3.875” (1,162 dots)	190.5 mm 7.5” (2,250 dots)	85.7 mm 3.37” (1,012 dots)	190.5 mm 7.5” (2,250 dots)	↑	0 mm	4.2 mm 0.16” (50 dots)
C 5	162.0 mm 6.38” (1,913 dots)	229.0 mm 9.01” (2,704 dots)	150.0 mm 5.9” (1,771 dots)	229.0 mm 9.01” (2,704 dots)	6.01 mm 0.24” (71 dots)	0 mm	4.2 mm 0.16” (50 dots)
DL	110.0 mm 4.33” (1,299 dots)	220.0 mm 8.66” (2,598 dots)	98.0 mm 3.86” (1,157 dots)	220.0 mm 8.66” (2,598 dots)	↑	0 mm	4.2 mm 0.16” (50 dots)
DL L	220.0 mm 8.66” (2,598 dots)	110.0 mm 4.33” (1.299 dots)	207.4 mm 8.17” (2,450 dots)	110.0 mm 4.33” (1.299 dots)	6.27 mm 0.25” (74 dots)	0 mm	6.27 mm 0.25” (74 dots)

NOTE:

- *The paper sizes indicated here should confirm to the nominal dimensions specified by JIS except B5 (ISO).*
- *The dot size is based on 300 dpi resolution.*

Landscape

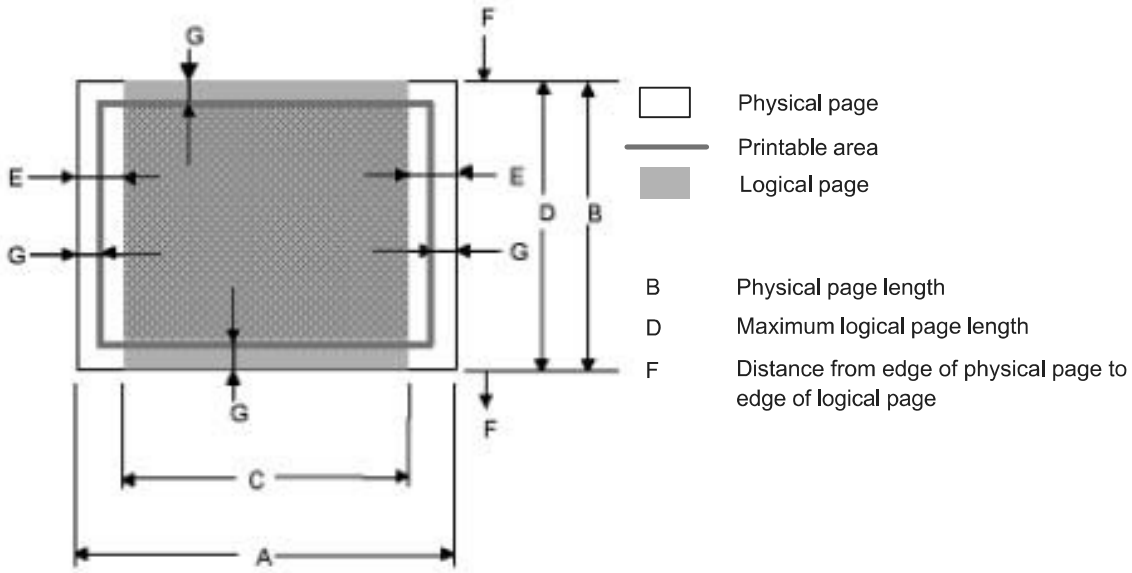

NOTE:

"Logical page" shows the printable area for a PCL driver.

"Printable area" shows mechanical printable area of the machine.

Therefore, the machine can only print within the shaded area when you use a PCL driver.

The table below shows the printable areas when printing on Landscape for each paper size.

Size	A	B	C	D	E	F	G
Letter	279.4 mm 11.0” (3,300 dots)	215.9 mm 8.5” (2,550 dots)	269.3 mm 10.6” (3,180 dots)	215.9 mm 8.5” (2,550 dots)	5.0 mm 0.2” (60 dots)	0 mm	4.2 mm 0.16” (50 dots)
Legal	355.6 mm 14.0” (4,200 dots)	215.9 mm 8.5” (2,550 dots)	345.5 mm 13.6” (4,080 dots)	215.9 mm 8.5” (2,550 dots)	↑	0 mm	4.2 mm 0.16” (50 dots)
Folio	330.2mm 13.0” (3,900 dots)	215.9 mm 8.5” (2,550 dots)	320.0mm 12.6” (3,780 dots)	215.9 mm 8.5” (2,550 dots)	↑	0 mm	4.2 mm 0.16” (50 dots)
Executive	266.7 mm 10.5” (3,150 dots)	184.15 mm 7.25” (2,175 dots)	256.6 mm 10.1” (3,030 dots)	184.15 mm 7.25” (2,175 dots)	5.0 mm 0.2” (60 dots)	0 mm	4.2 mm 0.16” (50 dots)
A 4	297.0 mm 11.69” (3,507 dots)	210.0 mm 8.27” (2,480 dots)	287.0 mm 11.2” (3,389 dots)	210.0 mm 8.27” (2,480 dots)	4.8 mm 0.19” (59 dots)	0 mm	4.2 mm 0.16” (50 dots)
A 5	210.0 mm 8.27” (2,480 dots)	148.5 mm 5.85” (1,754 dots)	200.0mm 7.87” (2,362 dots)	148.5 mm 5.85” (1,754 dots)	↑	0 mm	4.2 mm 0.16” (50 dots)
A 6	148.5 mm 5.85” (1,754 dots)	105.0 mm 4.13” (1,240 dots)	138.5 mm 5.45” (1,636 dots)	105.0 mm 4.13” (1,240 dots)	↑	0 mm	4.2 mm 0.16” (50 dots)
B 5 (JIS)	257.0 mm 10.11” (3,033 dots)	182.0 mm 7.1” (2,130 dots)	247.0 mm 9.72” (2,916 dots)	182.0 mm 7.1” (2,130 dots)	↑	0 mm	4.2 mm 0.16” (50 dots)
B 5 (ISO)	250.0 mm 9.84” (2,952 dots)	176.0 mm 6.93” (2,078 dots)	240.0 mm 9.44” (2,834 dots)	176.0 mm 6.93” (2,078 dots)	↑	0 mm	4.2 mm 0.16” (50 dots)
B 6	176.0 mm 6.93” (2,078 dots)	125.0 mm 4.92” (1,476 dots)	166.4 mm 6.55” (1,960 dots)	125.0 mm 4.92” (1,476 dots)	↑	0 mm	4.2 mm 0.16” (50 dots)
COM10	241.3 mm 9.5” (2,850 dots)	104.78 mm 4.125” (1,237 dots)	231.1 mm 9.1” (2,730 dots)	104.78 mm 4.125” (1,237 dots)	5.0 mm 0.2” (60 dots)	0 mm	4.2 mm 0.16” (50 dots)
MONARCH	190.5 mm 7.5” (2,250 dots)	98.43 mm 3.875” (1,162 dots)	180.4 mm 7.1” (2,130 dots)	98.43 mm 3.875” (1,162 dots)	↑	0 mm	4.2 mm 0.16” (50 dots)
C 5	229 mm 9.01” (2,704 dots)	162 mm 6.38” (1,913 dots)	219.0 mm 8.62” (2,586 dots)	162 mm 6.38” (1,913 dots)	4.8 mm 0.19” (59 dots)	0 mm	4.2 mm 0.16” (50 dots)
DL	220 mm 8.66” (2,598 dots)	110 mm 4.33” (1,299 dots)	210.0 mm 8.26” (2,480 dots)	110 mm 4.33” (1,299 dots)	↑	0 mm	4.2 mm 0.16” (50 dots)
DL L	110 mm 4.33” (1,299 dots)	220 mm 8.66” (2,598 dots)	97.5 mm 3.84” (1,151 dots)	220 mm 8.66” (2,598 dots)	6.27 mm 0.25” (74 dots)	0 mm	6.27 mm 0.25” (74 dots)

NOTE:

- *The paper sizes indicated here should confirm to the nominal dimensions specified by JIS except B5 (ISO).*
- *The dot size is based on 300 dpi resolution.*

3.6.2 PCL6/BR-Script3 emulation

You can not print within 4.2 mm (50dots in 300 dpi mode) on all four sides of the paper.

3.7 Print Speeds with Various Settings

Print speed is up to 17/18 ppm (HL-5130), 20/21 ppm (HL-5140when loading A4 or Letter size paper from the paper tray in the plain paper mode.

Actual print speed varies depending on the media type or paper size as shown in the tables below;

<A4 / Letter size>

Media type setting	All models
Transparencies	Up to 17/18 ppm (HL-5130) Up to 20/21 ppm (HL-5140/5150D/5170DN)
Thin Paper	Up to 17/18 ppm (HL-5130) Up to 20/21 ppm (HL-5140/5150D/5170DN)
Plain paper, Env.Thin	Up to 17/18 ppm (HL-5130) Up to 20/21 ppm (HL-5140/5150D/5170DN)
Thick Paper, Envelopes	Up to 17/18 ppm (HL-5130) Up to 20/21 ppm (HL-5140/5150D/5170DN)
Thicker/Bond Paper, Env.Thick	4 ppm *

<Smaller size than A4 or Letter>

Media type setting	All models
Transparency	Up to 17/18 ppm (HL-5130) Up to 20/21 ppm (HL-5140/5150D/5170DN)
Thin Paper	Up to 17/18 ppm (HL-5130) Up to 20/21 ppm (HL-5140/5150D/5170DN)
Plain paper, Env.Thin	8 ppm
Thick Paper, Envelopes	8 ppm
Thicker/Bond Paper, Env.Thick	4 ppm *

**The print speed may vary according to conditions, such as paper size and paper tray.*

NOTE:

- *When a smaller size paper than A4 or Letter is printed, the temperature on both edges of the fixing unit is much higher than the temperature on the center of the unit where the paper is fed depending on the setting or model. Therefore, the print speed is slowed in order to decrease the temperature on the edges after the specified time, it is maximum print speed when you first start printing.*
- *The actual print speed varies depending on the paper size.*

3.8 Toner Cartridge Weight Information

Toner Cartridge Weight (approx weight)

	TN3060/TN570	TN3030/TN540
Brand new Toner Cartridge Weight	827.5g	772.5g
Toner Weight at Brand New Toner Cartridge	197.5±2.5g	142.5±2.5g
Toner Cartridge Weight at Toner Near Empty	693.5-698.5g	693.5-698.5g
Remain Toner Weight at Toner Near Empty	80-85g	80-85g
Toner Cartridge Weight at Toner Empty	678.5-683.5g	678.5-683.5g
Remain Toner Weight at Toner Empty	65-70g	65-70g
You can print 500 to 600 pages with 10g toner.		

*Without yellow protector
*Toner cartridge weight may vary within 2 to 3g depending on the cartridge weight.

4. SERIAL NO. DESCRIPTIONS

The descriptions below show how to understand the meanings of the numbers printed on the labels or bag of the printer and printer parts:

< ID for production month >

A:	January	B:	February	C:	March	D:	April
E:	May	F:	June	G:	July	H:	August
J:	September	K:	October	L:	November	M:	December

< ID for year >

3: 2003 4: 2004

< ID for factory >

9: Kariya Plant A: Mie Brother C: BIUK
J: Buji Nan Ling Factory

(1) Printer: Printed on the label attached on the rear of the main body

<Example>

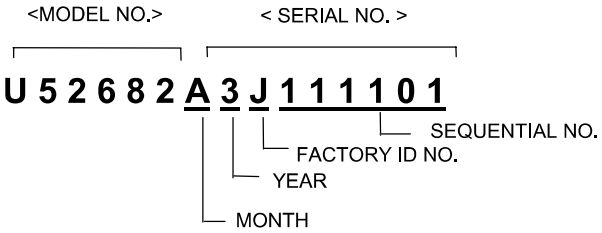

(2) Process unit: Imprinted on the aluminum bag
(Drum unit with toner cartridge)

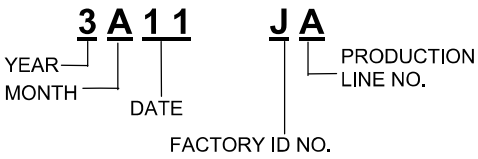

(3) Drum unit: Printed on the bar code label attached inside the drum unit

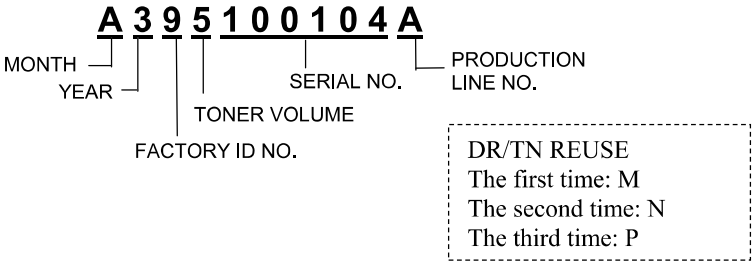

(4) Toner cartridge: Imprinted on the aluminum bag

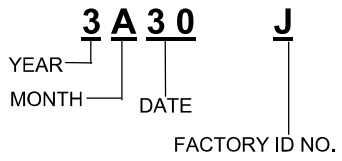

Printed on the bar code label attached on the toner cartridge

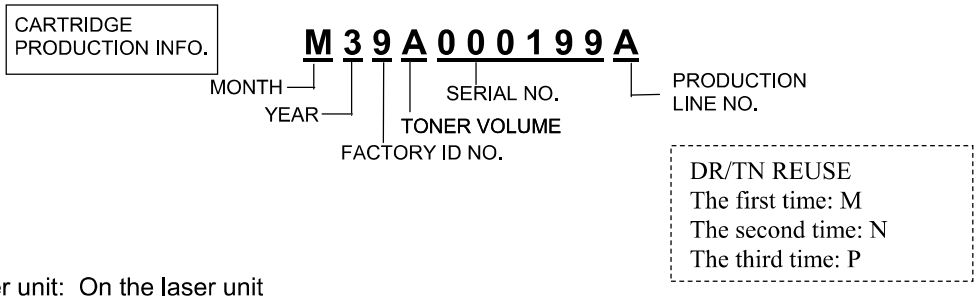

(5) Laser unit: On the laser unit

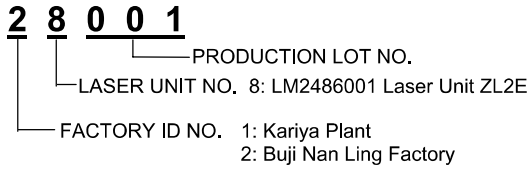

CHAPTER 2 INSTALLATION AND BASIC OPERATION

1. CONDITIONS REQUIRED FOR INSTALLATION

1.1 Power Supply

- The source voltage must stay within ±10% of the rated voltage shown on the rating plate.
- The power cord, including extensions, should not exceed 5 meters (16.5 feet).
- Do not share the same power circuit with other high-power appliances, particularly an air conditioner, copier or shredder. If it is unavoidable that you must use the printer with these appliances, it is recommended that you use an isolation transformer or a high-frequency noise filter.
- Use a voltage regulator if the power source is not stable.

1.2 Environment

- The printer should be installed near a power outlet, which is easily accessible.
- The room temperature is maintained between 10°C and 32.5°C. The relative humidity is maintained between 20% and 80%.
- The printer should be used in a well ventilated room.
- Place the printer on a flat, horizontal surface.
- Keep the printer clean. Do not place the printer in a dusty place.
- Do not place the printer where the ventilation hole of the printer is blocked. Keep approximately 100 mm (4 inches) between the ventilation hole and the wall.
- Do not place the printer where it is exposed to direct sunlight. Use a blind or a heavy curtain to protect the printer from direct sunlight when the printer is unavoidably set up near a window.
- Do not place the printer near devices that contain magnets or generate magnetic fields.
- Do not subject the printer to strong physical shocks or vibrations.
- Do not expose the printer to open flames or salty or corrosive gasses.
- Do not place objects on top of the printer.
- Do not place the printer near an air conditioner.
- Keep the printer horizontal when carrying.
- Do not cover the slots in the side cover.

1.3 System Requirements for Brother Printer Solution

Check the following system requirements to setup and operate the printer using Brother Printing Solution:

Computing System Operating System Version		Processor Speed	Minimum RAM	Recommended RAM	Available Hard Disk Space
Windows® Operating System	95, 98, 98SE	486/ 66MHz	8MB	16MB	40MB
	NT Workstation 4.0	Pentium 75MHz	16MB	32MB	50MB
	2000 Professional	Pentium 133MHz	64MB	128MD	50MB
	Me	Pentium 150MHz	32MB	64MB	50MB
	XP	Pentium 300MHz	128MB	128MB	50MB
Apple Macintosh Operating System	OS 8.6 to 9.2	All base models meet minimum system requirements	32MB	64MB	50MB
	OS X 10.1 to 10.2.1		128MB	160MB	

2. UNPACKING

When unpacking the printer, check to see that all of the following components are included in the carton.

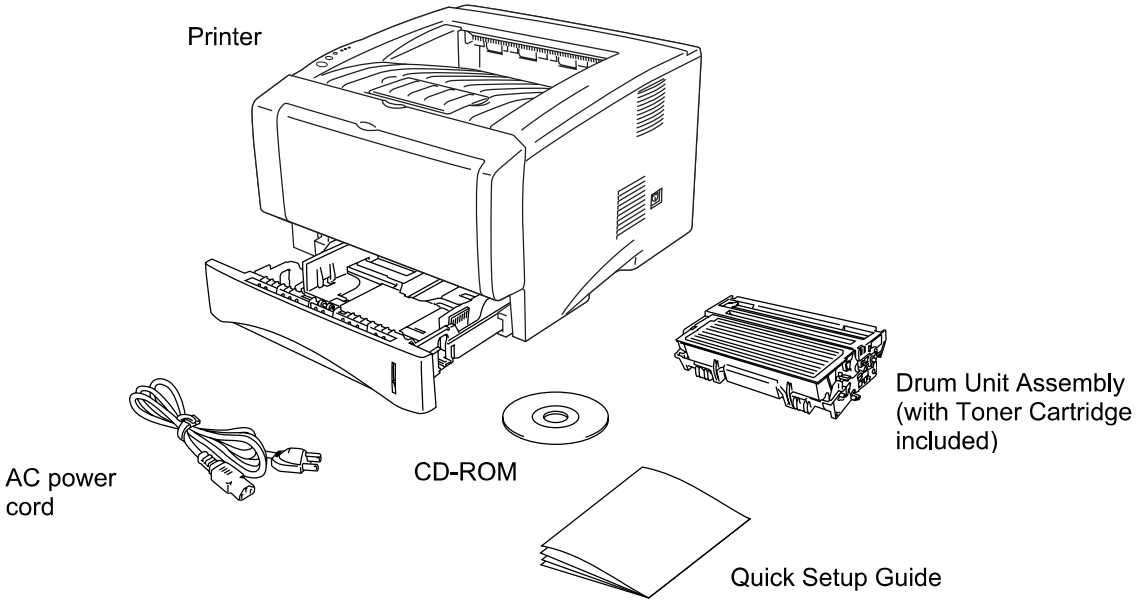

Fig. 2-1

NOTE:
Components may vary depending on the country.

Interface cable

An interface cable is not a standard accessory.

Some computers have a USB and a parallel port. Please buy the appropriate cable for the interface you are going to use.

When using a Parallel interface

Most parallel cables support bi-directional communication, but some might have an incompatible pin assignment or may not be IEEE 1284-compliant. Do not use a Parallel interface that is longer than 6 feet (2 meters).

When using a USB cable

Please make sure that you use a Hi-Speed USB 2.0 certified cable if your computer uses a Hi-Speed USB 2.0 interface.

Do not connect the USB cable to the front of your PC or to the IMac's keyboard.

It is recommended to use a USB interface cable that is no longer than 6 feet (2 meters).

3. INSTALL THE PRINTER

You need to implement hardware setup and driver installation to use the printer.

Firstly, identify the Operating System on your computer. (Windows® 95/98/Me, Windows NT® 4.0, Windows® 2000/XP and Macintosh)Then, purchase the appropriate interface cable (Parallel, USB or Network) for your computer. Most existing parallel cables support bi-directional communication, but some might have an incompatible pin assignment or may not be IEEE 1284-compliant.

The installation programs for the hardware setup and driver installation are contained on the supplied CD-ROM.

3.1 For All Users

For Windows® users

(1) Turn on the PC power. Insert the supplied CD-ROM into the CD-ROM drive. The opening screen will appear automatically. Follow the on-screen instructions.

NOTE:

*If the opening screen does not appear; click **Start** and select **Run**. Then, enter the CD-drive letter and type \START.EXE (for example: D:\START.EXE).*

(2) Click the **Initial Setup** icon on the menu screen.

(3) You can view the Initial Setup instructions.

For Macintosh users

(1) Turn on the Macintosh. Insert the CD-ROM into the CD-ROM drive.

(2) Double click the **Start Here** icon or **Start Here OS X** icon. Follow the on-screen instructions.

(3) Click the **Initial Setup** icon on the menu screen.

(4) You can view the Initial Setup instructions.

3.1.1 Install the drum unit assembly

(1) Open the front cover by pressing the front cover release button.
(2) Unpack the drum unit assembly. Remove the protective part.
(3) Rock it from side to side several times to distribute the toner evenly inside the assembly.
(4) Put the drum unit assembly into the printer.

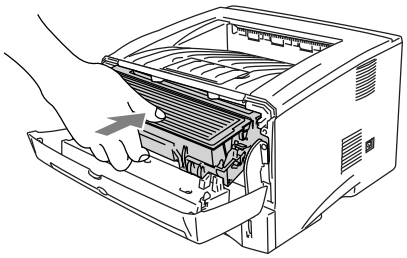

Fig. 2-2

(5) Close the front cover of the printer.

3.1.2 Load paper into the paper tray

(1) Pull the paper tray completely out of the printer.
(2) While pressing the paper guide release lever, slide the adjusters to fit the paper size. Check that they locate correctly into the slots.

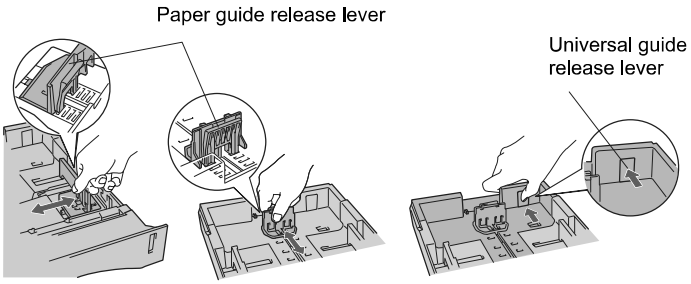

Fig. 2-3

NOTE:

For Legal or 8.5 x 13 in. paper, press the universal guide release lever to extend the rear of the Paper tray.

(3) Fan the stack of paper well to avoid paper jams and misfeeds.

(4) Put paper in the paper tray. Check that the paper is flat in the tray and below the maximum paper mark.

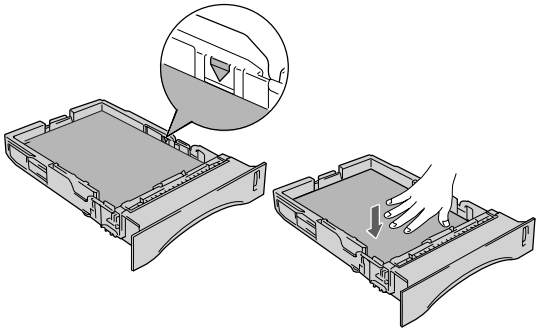

Fig. 2-4

(5) Put the paper tray firmly back in the printer.

3.1.3 Print a test page

(1) Make sure the printer power switch is off. Connect the AC power cord to the printer. Do not connect the interface cable.

(2) Plug the AC power cord into an AC outlet. Turn the power switch on.

(3) After the printer has finished warming up, the **Status** LED stops blinking and stays green.

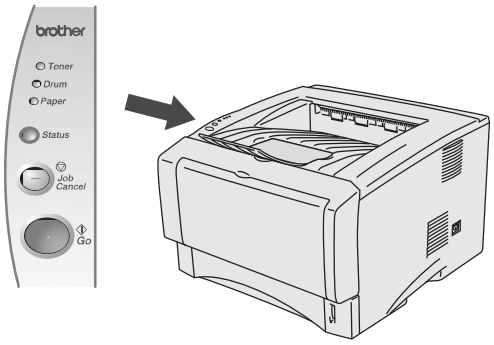

Fig.2-5

(4) Press the **Go** button. The printer prints a test page. Check that the test page printed correctly.

NOTE:

This function won't be available after sending a print job from your PC.

In order to print a test page even after sending a print job, follow the steps from 1) to 9) written on page 7-17 in Chapter 7 (PIT3).

Follows the instructions for your operating system and interface cable type.

3.2 For Windows® Users

Connect the printer to the PC & install the driver

For parallel interface cable users

(1) Click **"Connect the interface cable & Install the printer driver/utility"** from the **Initial Setup** menu.
(2) Select the **parallel interface**.
(3) Turn off the printer power switch.
(4) Connect the interface cable to your PC, and then connect it to the printer.
(5) Turn on the printer power switch.

NOTE:
*If the **"Found New Hardware Wizard"** appears, click the **Cancel** button.*

(6) Click the **Next** button when the movie finishes.
(7) Click the **Install** button. Follow the on-screen instructions.
(8) Click the **Finish** button. The setup is now complete.

For USB interface cable users

NOTE:
*If the **"Found New Hardware Wizard"** appears on the PC, click the **Cancel** button.*

(1) Make sure the USB interface cable is **NOT connected** to the printer, and then begin installing the driver. If you have already connected to the cable, remove it.
(2) Click **"Connect the interface cable & install the printer driver/utility"** from the **Initial Setup** menu.
(3) Select the **USB Interface**.
(4) Click the **Install** button. Follow the on-screen instructions.
(5) When this screen appears, make sure the printer power switch is on. Connect the USB interface cable to your PC, and then connect it to the printer. Click the **Next** button.

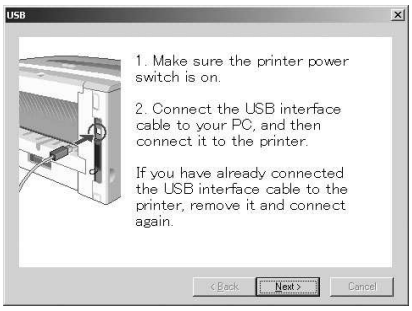

Fig.2-6

(6) Click the **Finish** button.

For Windows® 98/Me users: The setup is now complete.

For Windows® 2000/XP users: Follow the instructions below for setting the PC printer port.

For Windows® 2000/XP users only

(1) Click **Start**, and then **Printers and Faxes**.

Fig. 2-7

(2) Select the icon of the appropriate printer.

(3) From the **File** menu, select **Set as Default printer.**

For Windows® 2000/XP users: The setup is now complete.

For network users (for HL-5170DN only)

- For connecting the printer to a network, it is recommended to contact the system administrator prior to installation.
- For the administrator: Configure the printer referring to the following instructions.
- For installing the driver on the PC, refer to the following instructions once the administrator has configured the printer.

1. For the administrator

Install the BRAdmin Professional Utility (Windows Users Only)

The BRAdmin Professional software utility is designed to manage your Brother network connected devices such as network-ready printers and/or network-ready Multifunction devices in a Local Area Network (LAN) environment.

BRAdmin Professional can also be used to manage devices of other manufacturers whose products support SNMP (Simple Network Management Protocol).

For more information on BRAdmin Professional, go to http://solutions.brother.com

(1) Insert the CD-ROM into your CD-ROM drive. The opening screen will appear automatically. Follow the on-screen instruction.

(2) Click the **Install Software** icon on the menu screen.

(3) Follow the instructions on the screen. Click **BRAdmin Professional**.

NOTE:

*The default password for the print server is "**access**". You can use the BRAdmin Professional software or a web browser to change this password.*

Brother has also developed Web BRAdmin, an enterprise network software utility that enables management of Brother and other SNMP compliant devices in larger LAN/WAN environments.

This software is Web server based and requires the installation of Microsoft's Internet Information Server and Sun's Java client software. To learn more about the Web BRAdmin software or to download it, please go to http://solutions.brother.com/webbradmin

Driver Deployment Wizard: Useful utility for peer-to-peer users

Use the Brother Driver Deployment Wizard software to automate the installation of Brother networked printers in a TCP/IP environment. The Wizard can create an Executable file that can be sent to other network users, when run, the Executable file installs the appropriate printer driver and network printing software.

To access the Driver Deployment Wizard:

(1) Insert the CD-ROM supplied with the printer.

(2) Click the **Install Software** icon and select the Driver Deployment Wizard.

2. Installing the driver

(1) Click the "**Connect the interface cable & install the printer driver/utility**" from the **Initial Setup** menu.

(2) Select the **Network interface**.

(3) Turn the printer power switch off.

(4) Connect the cable to your printer, and then connect it to a free port on your hub.

(5) Turn the printer power switch on.

(6) Click the **Next** button when the movie finishes

(7) Click the **Install** button. Follow the on-screen instructions.

(8) Select the network connecting method, and follow the instructions below depending on it.

- For Network shared printer users: Go to 3.
- For Brother Peer-to-Peer network printer users (LPR-recommended Peer-to- Peer printing method): Go to 4.
- For Brother Peer-to-Peer network printer users (NetBIOS): Go to 5

3. For Network shared printer users

(1) Select **Network Shared Printer**, and then click the **Next** button.

(2) Select the current printer's queue, and then click the **OK** button.

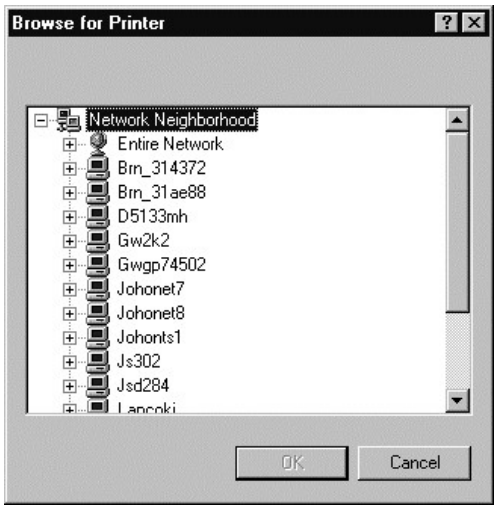

Fig. 2-8

(3) Click the **Finish** button.

(4) The setup is now complete.

4. For Brother Peer-to-Peer network printer users (LPR-recommended Peer-to-Peer printing method)

Configuring the LPR port

(1) Select **Search from a list of available printers** or enter your printer's IP address. Click the **Next** button.

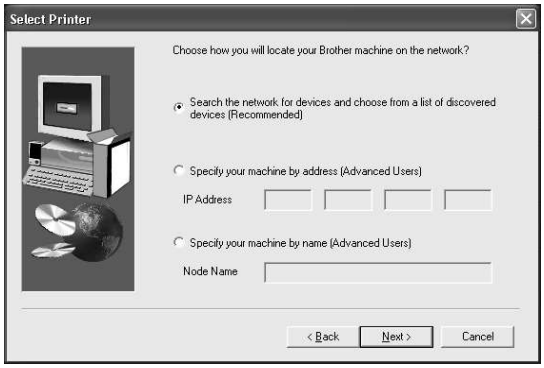

Fig. 2-9

NOTE: Contact your Administrator about the Printer's IP Address.

(2) Select the IP address of your printer and **LPR,** and then click the **Next** button.

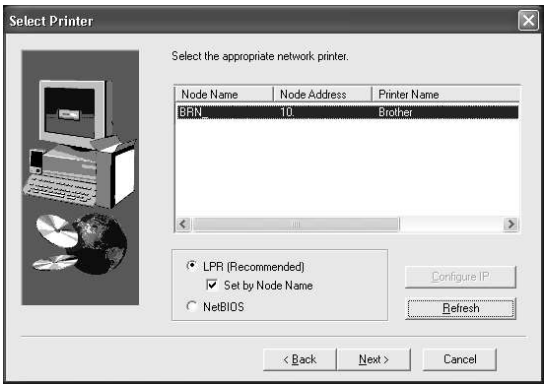

Fig.2-10

(3) Click the **Finish** button.

For WindowsNT® 4.0 and Windows® 2000/XP users: The setup is now complete.
For Windows® 95/98/ME users: After your PC has restarted, setup will be complete.

5. For Brother Peer-to-Peer network printer users (NetBIOS)

Configuring the NetBIOS port

(1) Select **Search from a list of available printers,** and then click the **Next** button.
(2) Select the IP address of your printer, and then select "NetBIOS". Click the **Next** button.
(3) Click the **Finish** button.

For WindowsNT® 4.0 and Windows® 2000/XP users: The setup is now complete.
For Windows® 95/98/ME users: After your PC has restarted, setup will be complete.

3.3 For Macintosh Users

For USB interface cable users

Connect the printer to the Macintosh and install the BR-Script PPD File

<For Mac® OS 8.6 to 9.2 Users (HL-5130/5140 Users)

(1) Click **Connect the Interface cable & Install the driver/utility** from the **Initial Setup** menu.
(2) Follow the on-screen instructions, and restart your Macintosh.
(3) Make sure the printer power switch is on.
(4) Connect the USB interface cable to your Macintosh, and then connect it to the printer.

NOTE: Do not connect the USB cable to the keyboard USB Port or a non-powered USB Hub.

(5) Open the **Chooser** from the **Apple** menu.
(6) Click the **Brother Laser** and select the appropriate printer. Close the **Chooser**.
(7) The setup is now complete.

<For Mac® OS 8.6 to 9.2 Users (HL-5150D, HL-5170DN Users)>

(1) Make sure the printer power switch is on.

(2) Connect the USB interface cable to your Macintosh, and then connect it to the printer.

NOTE: Do not connect the USB cable to the keyboard USB Port or a non-powered USB Hub.

(3) Click **Connect the Interface cable & Install the driver/utility** from the **Initial Setup** menu.

(4) Click the **Install** button, and follow the on-screen instructions.

(5) Open the **Macintosh HD** icon.

(6) For Mac OS 8.6 to 9.04 Users: Open the **Apple Extras** folder. Open the **Apple Laser Writer Software** folder.

For Mac OS 9.1 to 9.2 Users: Open the **Applications** (Mac OS 9) folder. Open the **Utilities** folder.

(7) Open the **Desktop Printer Utility** icon.

(8) Select **Printer (USB)**, and then click the **OK** button.

(9) Click the **Change……**button in the **PostScript Printer Description (PPD) file**. Select **Brother HL-5150D series/HL-5170DN series**, and then click the **Select** button.

(10) Click the **Change…..**button in the **USB Printer Selection**. Select **HL-5150D series/HL-5170DN series**, and then click the **OK** button.

(11) Click the **Create….**button.

(12) Enter your printer name (HL-5150D series/HL-5170DN series), and then click the **Save** button.

(13) Select **Quit** from the **File** menu.

(14) The setup is now complete.

<Setting your printer as the Default Printer>

(1) Click the **HL-5150D series/HL-5170DN series** icon on the Desktop.

(2) Select **Set Default Printer** from the **Printing** menu.

(3) The setup is now complete.

<For Mac® OS X 10.1 to 10.2 Users >

(1) Click **Connect the interface cable & Install the driver/utility** from the **Initial Setup** menu.

(2) Make sure the printer power switch is on.

(3) Connect the USB Interface cable to your Macintosh, and then connect it to the printer.

NOTE: Do not connect the USB cable to the keyboard USB Port or a non-powered USB Hub.

(4) Click the **Install** button, and follow the on-screen instructions.

(5) Select **Applications** from the **Go** menu.

(6) Open the **Utilities** folder.

(7) Open the **Print Center** icon.

(8) Click the **Add Printer….** Button.

(9) Select **USB.**

(10) Select the appropriate printer, and then click the **Add** button.

(11) Select **Quit Printer Center** from the **Printer Center** menu.

(12) The setup is now complete.

For network users (HL-5170DN only)

Connect the printer to the Macintosh & install the BR-Script PPD file

<For Mac® OS 8.6 to 9.2 Users>

(1) Click **Connect the interface cable & Install the driver/utility** from the **Initial Setup** menu.
(2) Select the **Network interface**.
(3) Turn off the printer power switch.
(4) Connect the network interface cable to the printer, and then connect it to a free port on your hub.
(5) Turn on the printer power switch.
(6) Click the **Next** button when the movie finishes.
(7) Click the **Install** button, and follow the on screen instructions.
(8) Open the **Chooser** from the **Apple** menu.
(9) Click the **LaserWriter 8** icon, and then select **BRN_xxxxxx_P1_AT**. Click the **Create** button. Close the **Chooser**.

NOTE:

1. *If the Apple LaserWriter 8 Driver is not already installed on your system, you can download it from http://www.apple.com*
2. *xxxxxx are the last six digits of the Ethernet address.*

(10)The setup is now complete.

<For Mac® OS X 10.1 to 10.2 Users>

(1) Click **Connect the interface cable & Install the driver/utility** from the **Initial Setup** menu.
(2) Select the **Network interface**.
(3) Turn off the printer power switch.
(4) Connect the network interface cable to the printer, and then connect it to a free port on your hub.
(5) Turn on the printer power switch.
(6) Click the **Install** button and follow the on screen instructions.
(7) Select **Applications** from the **Go** menu.
(8) Open the **Utilities** folder.
(9) Open the **Print Center** icon.
(10) Click **Add** button.
(11) Select **Apple Talk**.
(12) Select **BRN_xxxxxx_P1_AT**, and then click the **Add** button.

NOTE: xxxxxx are the last six digits of the Ethernet address.

(13)Select **Quit Print Center** from the **Print Center** menu.
(14)The setup is now complete.

.

4. PRINTING METHODS

The printer provides two types of printing method; printing from the paper tray and printing from the multi-purpose tray.

4.1 Printing from the Paper Tray

You can load plain paper, recycled paper or transparencies into the paper tray. If paper is loaded into the paper tray, the printer automatically feeds paper sheet by sheet and ejects the printed page into the output tray.

For the details on paper tray loading, refer to subsection 3.1.2 'Load paper into the paper tray' in this chapter and subsection 3.5 'Paper' in CHAPTER 1.

4.2 Printing from manual feed tray (HL-5130/5140 only)

(1) Select the Paper Size, Media Type and paper Source etc. in the printer driver.

(2) Send the print data to the printer.

NOTE: A NO PAPER message is shown in the Status Monitor and indicated by the control panel LEDs until you put a sheet of paper in the manual feed tray,

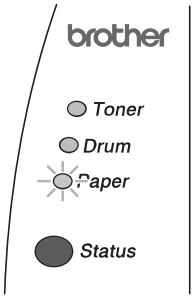

Fig.2-11

(3) Open the manual feed tray. Slide the paper guides to fit the paper size.

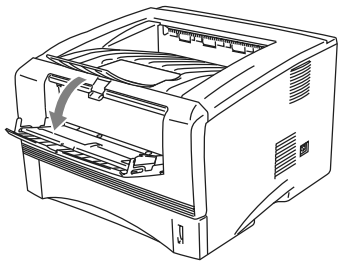

Fig.2-12

(4) Using both hands to put paper in the manual feed tray until the front edge of the paper touches the paper feed roller. Hold the paper in this position until the printer automatically feeds the paper in for a short distance, and then let go of the printer.

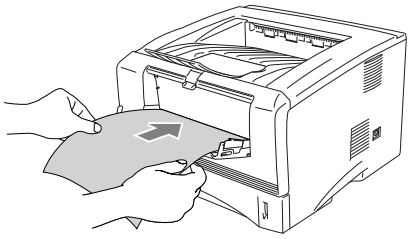

Fig.2-13

NOTE: Make sure the paper is neatly stacked and in the proper position on the manual feed tray. If it is not, the paper may not be fed correctly, resulting in a skewed printout or a paper jam.

Do not put more than one piece of paper in the manual feed tray at any one time, or it may cause a jam.

If you put any Media (paper, transparency and so on) in the manual feed tray before the printer is in the READY state, the media may be ejected without being printed on.

(5) After the printed page comes out of the printer, put in the next sheet of paper as in Step 4 above. Repeat for each page that you want to print.

4.3 Printing from Multi-purpose Tray (MP Tray) : HL-5150D/5170DN only

You can feed bond paper, thick paper, labels, envelopes or cards as well as plain paper, recycled paper or transparencies into the multi-purpose tray. (For details on feedable paper, see subsection 3.5 'Paper' in CHAPTER 1.)

NOTE:

- *For correct printing, the same paper size must be selected from within the software application as the paper in the tray.*

When using the multi-purpose tray, follow the steps below;

(1) Select the Paper Size, Media Type and paper Source etc. in the printer driver.

(2) Open the MP tray and lower it gently.

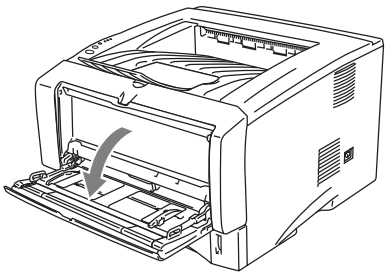

Fig. 2-14

(3) Pull out the MP tray support flap.

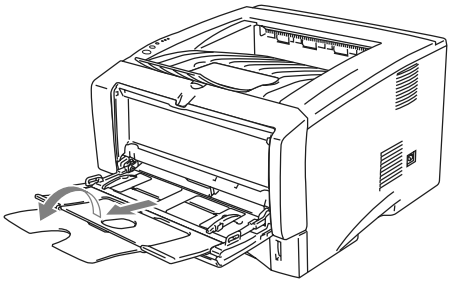

Fig. 2-15

(4) When loading paper in the MP tray, make sure it touches the back of the tray and remains under the maximum paper height guides on both sides of the tray.

NOTE:

Note the following when placing paper on the multi-purpose tray:

- *If the paper to be printed on weighs more than 105 g/m^2 (28 lbs), use the face up output tray.*
- *Insert the leading edge of the paper first and push it gently into the tray.*
- *If pre-printed paper is used in the multi-purpose tray, the paper should be inserted top edge first with the printed side face up.*
- *Make sure that the paper is straight and in the proper position on the MP tray. If it is not, the paper may not be fed properly, resulting in a skewed printout or a paper jam.*

(5) While pressing the paper-guide release lever, slide the paper guide to fit the paper size.

NOTE:

**The side to be printed on must be face up.*

**During printing, the inside tray rises to feed paper into the printer.*

(6) Send the print data to the printer.

4.4 Printing on envelopes

Use of any of the envelopes listed below may cause damage to the printer. Such damage is not covered under any warranty or service agreement.

- Envelopes that are damaged, curled, wrinkled, or irregularly shaped
- Envelopes that are extremely shiny or highly textured
- Envelopes with clasps, snaps or tie strings
- Envelopes with self-adhesive closures
- Envelopes of baggy construction
- Envelopes that are not sharply creased
- Embossed envelopes
- Envelopes that were previously printed by a laser printer
- Envelopes that are pre-printed on the inside
- Envelopes that cannot be arranged uniformly when placed in a pile
- Envelopes constructed with paper that exceeds the paper weight specifications for the printer.
- Poorly manufactured envelopes with edges that are not straight or consistently square.
- Envelopes with transparent windows, holes, cutouts or perforations.

NOTE:

- *Before printing envelopes, fan the stack well to avoid paper jams and misfeeds.*
- *Do not load different types of paper at the same time in the paper tray because it may cause paper jams or misfeeds.*
- *Do not print envelopes using manual duplex printing.*
- *For proper printing, you must choose the same paper size from your software application as the paper in the tray.*
- *Most envelopes will be suitable for your printer. However, some envelopes will have feed and print-quality problems because of the way they have been made. A suitable envelope should have edges with straight, well-creased folds and the leading edge should not be thicker than two pieces of paper. The envelope should lie flat and not be of baggy or flimsy construction. You should buy quality envelopes from a supplier who understands that you will be using the envelopes in a laser printer. Before you print a lot of envelopes, test one to make sure that the print results are what you want.*
- *Brother will not recommend a particular envelope because envelope manufacturers may change the envelope specifications. You are responsible for the quality and performance of envelopes you use.*

Printing on envelopes from the manual feed tray (For HL-5130 and HL-5140)

The printer has a straight paper path from the manual feed tray to the back of the printer. Use this paper feed and output method when you want to print envelopes.

The printer automatically turns on the Manual Feed mode when you put paper in the manual feed tray.

When printing on envelopes, follow the steps below.

(1) Select the Paper Size, Media Type and paper Source etc. in the printer driver.

(2) Open the back output tray.

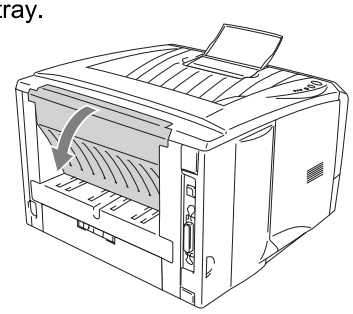

Fig.2-16

(3) Send the print data to the printer.

NOTE: A NO PAPER status is shown by the control panel LEDs until you put a sheet of paper in the manual feed tray.

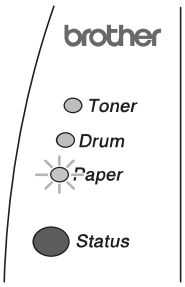

Fig.2-17

(4) Open the manual feed tray. Slide the paper guides to fit the envelope size.

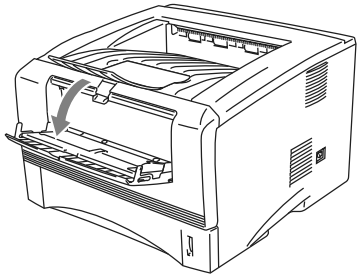

Fig. 2-18

NOTE: <Envelopes that have been creased after they have been printed>

At the back of the printer, open the back output tray and push down the blue tabs at the left and right hand sides (as shown in the figure below). When you have finished printing your envelopes, close the back output tray to reset the two blue tabs back to their original position.

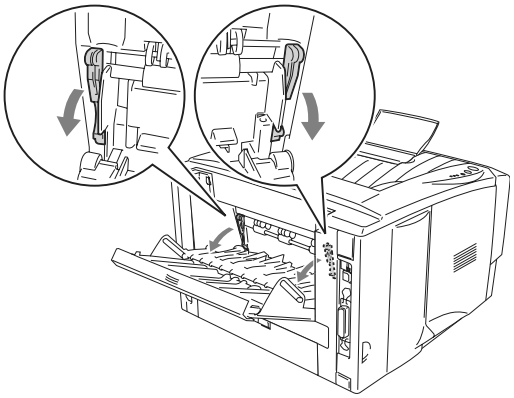

Fig.2-19

(5) Using both hands put the envelope in the manual feed tray until the front edge of the envelope touches the paper feed roller. Hold the envelope in this position until the printer automatically feeds it in for a short distance, and then let go of the envelope.

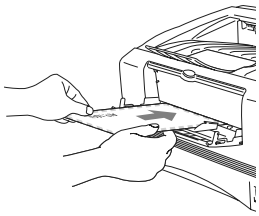

Fig.2-20

NOTE;

- *Make sure the envelope is straight as you insert it sideways in the manual feed tray. If it is not, the envelope may not be fed properly, resulting in skewed printout or a jam.*
- *Do not put more than one envelope in the manual feed tray at any one time, or it may cause a jam.*
- *Put the envelope in the manual feed tray with the side to be printed face up.*
- *If you put any Media (paper, transparency and so on) in the manual feed tray before the printer is in the READY state, the media may be ejected without being printed on.*

(6) After the printed envelope comes out of the printer, the printer will wait until you put in the next envelope. Repeat Step 5 for each envelope you want to print.

(7) After you finish the print job, close the back output tray.

NOTE: Envelopes joints that are sealed by the manufacturer should be secure.
All sides should be properly folded without wrinkles or creases.

Printing on envelopes from the MP tray (For HL-5150D and HL-5170DN)

The printer has a straight paper path from the MP tray to the back of the printer. Use this paper feed and output method when you want to print envelopes.

The printer automatically turns on the MP Tray mode when you put paper in the MP tray.

When printing on envelopes, follow the steps below.

(1) Select the Paper Size, Media Type and paper Source etc. in the printer driver.

(2) Open the back output tray.

(3) Open the MP tray and lower it gently.

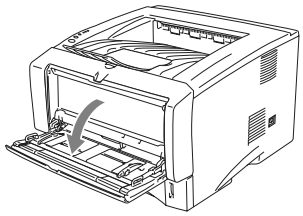

Fig.2-21

(4) Pull out the MP tray support flap.

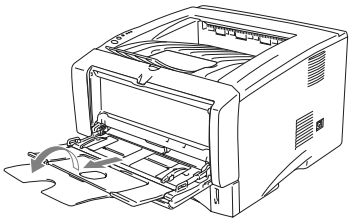

Fig.2-22

NOTE: <Envelopes that have been creased after they have been printed>

At the back of the printer, open the back output tray and push down the blue tabs at the left and right hand sides (as shown in the figure below). When you have finished printing your envelopes, close the back output tray to reset the two blue tabs back to their original position.

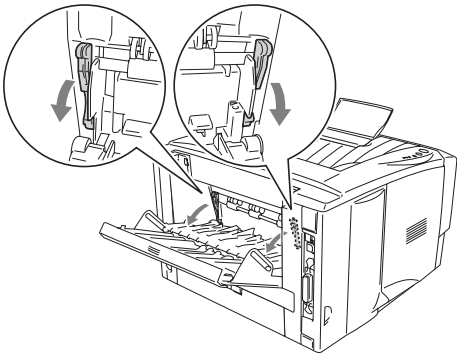

Fig.2-23

(5) Put the envelopes in the MP tray so that they touch the back of the tray and remain under the maximum paper height guides on both sides of the tray. Do not put more than 3 envelopes in the MP tray at any one time, or it may cause a jam.

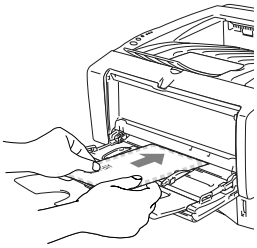

Fig.2-24

NOTE;

- *Make sure that the envelope are neatly stacked and in the proper position in the MP tray. If they are not, the envelopes may not be fed properly, resulting in a skewed printout or a jam.*

(6) Press and slide the paper-width guide to fit the envelope size.

NOTE: DL size double-flap envelopes

If the DL size double flap envelope is creased after printing, go to the Basic tab, select Paper Size and then select DL Long Edge. Put a new DL size double-flap envelope in the MP tray with the longest edge of the envelope in first, then print again.

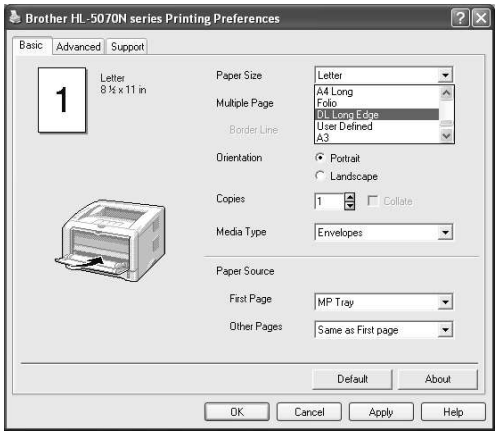

Fig.2-25

NOTE: When you put envelopes in the MP tray, please remember the following;
**During printing, the inside tray rises to feed envelopes into the printer.*
**The side to be printed on must be face up.*
**Put the leading edge (top of the paper) in first and push it gently into the tray.*

(7) Send the print data to the printer.
(8) After you finish the print job, close the back output tray..

*NOTE: *If envelopes get smudged during printing, in the printer driver select MP Tray as the Paper Source for a straight paper path. Then, set the Media Type to Thick Paper or Thicker Paper to increase the fixing temperature.*
**Envelopes joints that are sealed by the manufacturer should be secure.*
**All sides should be properly folded without wrinkles or creases.*

4.5 Printing on transparencies

You can print on transparencies from the paper tray, manual feed tray or MP tray.

Printing on transparencies from the paper tray

(1) Select the Paper Size, Media Type, Paper Source, and other settings in the printer driver.
(2) Pull the paper tray completely out of the printer.
(3) While pressing the blue paper-guide release levers, slide the paper guides to fit the transparency size. Check that the guides are firmly in the slots.

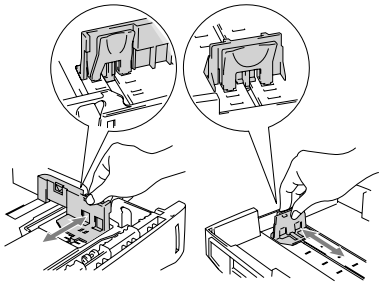

Fig.2-26

(4) Put transparencies in the tray. Check that the transparencies are flat and below the maximum paper mark. Do not put more than 10 transparencies in the tray at any one time, or it may cause a jam.
(5) Put the paper tray firmly back in the printer.

NOTE: Pull out the support flap to prevent transparencies from sliding off the top output tray.

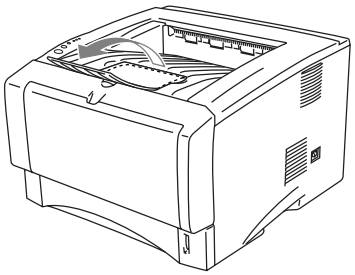

Fig.2-27

(6) Send the print data to the printer.

> **CAUTION:**
> *Remove each transparency immediately.*

Printing on transparencies from the manual feed tray (For HL-5130 and HL-5140)

NOTE: When the back output tray is open, the printer has a straight paper path from the manual feed tray to the back output tray.

(1) Select the Paper Size, Media Type, Paper Source, and other settings in the printer driver.

(2) Send the print data to the printer.

NOTE: A NO PAPER status is shown by the control panel LEDs until you put a transparency in the manual feed tray.

(3) Open the manual feed tray. Slide the paper guides to the transparency size.

(4) Using both hands put the transparency in the manual feed tray until its front edge touches the paper feed roller. Hold the transparency in this position until the printer automatically feeds it in for a short distance, and then let go of the transparency.

*NOTE: *Make sure that the transparency is straight and in the proper position on the manual feed tray. If it is not, the transparency may not be fed properly, resulting in a skewed printout or a jam.*

**Do not put more than one transparency in the manual feed tray at any one time, or it may cause a jam.*

**If you put any Media (paper, transparency and so on) in the manual feed tray before the printer is in the READY state, the media may be ejected without being printed on.*

(5) After the printed transparency comes out of the printer, put in the next transparency as described in Step 4 above. Repeat for each transparency that you want to print.

> **CAUTION:**
> *Remove each transparency immediately after printing. Stacking the printed transparencies may cause a paper jam or the transparency to curl.*

Printing on transparencies from the MP tray (For HL-5150D and HL-5170DN)

NOTE: When the back output tray is open, the printer has a straight paper path from the MP tray to the back of the printer.

(1) Select the Paper Size, Media Type, Paper Source, and other settings in the printer driver.
(2) Send the print data to the printer.

NOTE: A NO PAPER status is shown by the control panel LEDs until you put a transparency in the MP tray.

(3) Open the MP tray and lower it gently.
(4) Pull the MP tray support flap.
(5) When putting transparencies in the MP tray, make sure they touch the back of the tray and remain under the maximum paper height guides on both sides of the tray. Do not put more than 10 transparencies in the MP tray at any one time, or it may cause a jam.

*NOTE: *Make sure that the transparencies are straight and in the proper position in the MP tray. If they are not, the transparencies may not be fed properly, resulting in a skewed printout or a jam.*

(6) While pressing the paper-guide release lever, slide the paper guide to fit the transparency size.

NOTE: When you put transparencies in the MP tray, please remember the following:
**The side to be printed on must be face up.*
**Put the leading edge (top of the transparencies) in first and push it gently into the tray.*

CAUTION:
Remove each transparency immediately after printing. Stacking the printed transparencies may cause a paper jam or the transparency to curl.

4.6 Printing on Both Sides of the Paper (manual duplex printing)

The supplied printer drivers for Windows® 95/98/Me, Windows® NT 4.0, Windows® 2000/XP, Mac OS 8.6 to 9.2 and Mac OS X 10.1 or later (except for Mac OSX 10.2) all enable manual duplex printing.

NOTE: The PS driver does not support manual duplex printing.

Manual duplex printing from the paper tray

When printing on both sides of the paper, follow the steps below;

(1) Choose Manual Duplex mode you need from the printer driver.

(2) The printer will automatically print all the even-numbered pages on one side of the paper first.

(3) Remove the printed even-numbered pages from the output tray and put them back in the paper tray, placing the paper with the side to be printed on (blank side) face down. Follow the instructions on the computer screen.

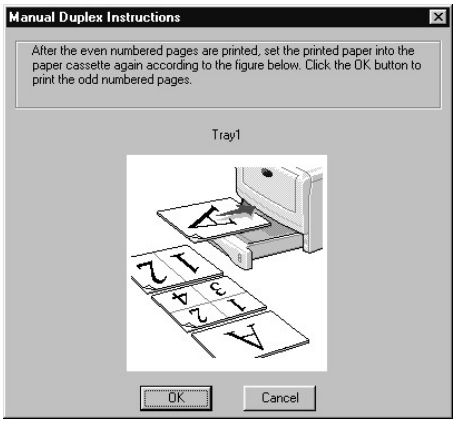

Fig.2-28

(4) The printer will now automatically print all the odd-numbered pages on the other side of the paper.

Manual duplex printing from the manual feed tray (For HL5130 and HL-5140)

> ***CAUTION:***
> **Before you put the sheets back in the manual feed tray, you will have to straighten them, or you may get paper jams.*
> **You should not use very thin or very thick paper.*
> **When you use the manual duplex function, it is possible that there may be paper jams or poor print quality. If there is a paper jam, see 4. PAPER PROBLEMS in Chapter 6.*

(1) Choose the Manual Duplex printing mode from the Advanced tab, and from the Basic tab select the Paper Source to be Manual feed.

(2) Using both hands put the paper in the manual feed tray with the side to be printed on first facing up. Follow the instructions on the computer screen. Repeat this step until you have printed all the even-numbered pages.

(3) Remove the printed even-numbered pages from the output tray and put them in the same order back into the manual feed tray. Place the paper with the side that is going to be printed on (the blank side) face up. Follow the instructions on the computer screen.

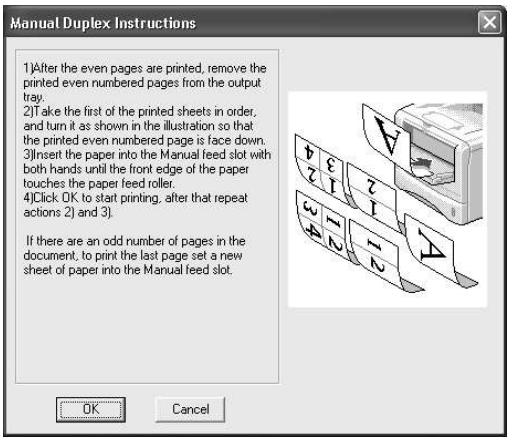

Fig.2-29

(4) Repeat Step 3 until you have printed all the odd-numbered pages on the other side of the paper.

Manual duplex printing from the MP tray (For HL5150D and HL-5170DN)

> ***CAUTION:***
> **Before putting the sheets back in the MP tray, you will have to straighten them, or you may get paper jams.*
> **You should not use very thin or very thick paper.*
> **When you use the manual duplex function, it is possible that there may be paper jams or poor print quality. If there is a paper jam, see 4. PAPER PROBLEMS in Chapter 6.*

(1) Choose the Manual Duplex printing mode from the Advanced tab, and from the Basic tab select the Paper Source to be MP Tray feed.

(2) Using both hands put the paper in the MP tray with the side to be printed on first facing up. Follow the instructions on the computer screen. Repeat this step until you have printed all the even-numbered pages.

(3) Remove the printed even-numbered pages from the output tray and put them in the same order back into the MP tray. Place the paper with the side that is going to be printed on (the blank side) face up. Follow the instructions on the computer screen.

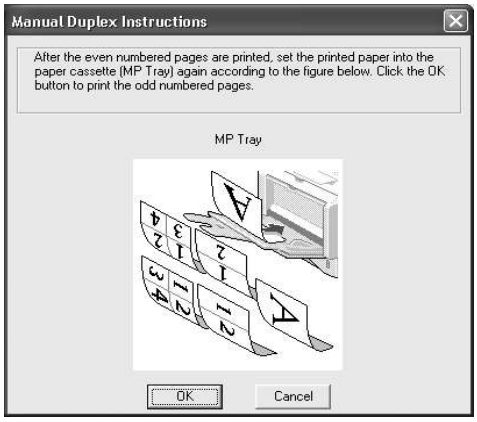

Fig.2-30

(4) Repeat Step 3 until you have printed all the odd-numbered pages on the other side of the paper.

4.7 Paper orientation for printing on both sides of the paper

The printer prints the second page first.

If you print 10 pages on 5 sheets of paper, it will print page 2 then page 1 on the first sheet of paper.

It will print page 4 then page 3 on the second sheet of paper.

It will print page 6 then page 5 on the third sheet of paper, and so on.

When doing manual duplex printing, the paper must be put in the paper tray in the following way:

***For the manual feed tray or the multi-purpose (MP) tray**

Put the side to be printed on first, in face-up, with the leading edge (top) of the paper in first.

To print the second side, put the paper face down, with the leading edge (top) of the paper in first.

If letterhead paper is used, this would be put in to the MP tray with the heading facedown, and in first.

To print the second side, put the heading face up and in first.

***For the upper paper tray and the optional lower tray (tray 1 or tray 2)**

Put the side to be printed on first, face down, with the leading edge (top) of the paper at the front of the tray.

To print the second side, put the paper face up, with the leading edge (top) of the paper at the front of the tray.
If letterhead paper is used, this would be put in to the paper tray with the heading face up, and at the front of the tray.

To print the second page, put the heading face down and at the front of the tray.

NOTE: For Thicker paper that has curled once the first side has been printed on, and you cannot feed the paper for the second time from manual feed tray or MP tray to allow the other side of the paper to be printed on:

At the back of the printer, open the back output tray and push down the blue tabs at the left and right hand sides (as shown in the figure below). When you have finished printing, close the back output tray to reset the two blue tabs back to their original position.

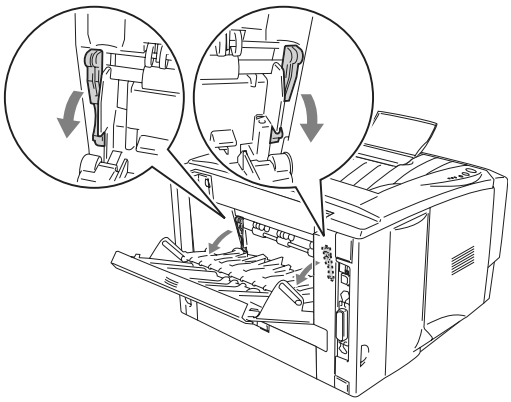

Fig.2-31

4.8 Printing on both sides of the paper (automatic duplex printing) : For HL-5150D and HL-5170DN

<Guidelines for automatic duplex printing>

*Use A4, Letter or Legal size plain paper.

*If paper is curled, straighten it and then put it back in the paper tray.

*You should use regular paper. Do not use bond paper or thin paper if possible.

*When you use the duplex printing function, the printing quality becomes worse or paper jam may occur under some circumstances.

(1) Load paper into the paper tray or MP tray.

(2) Make sure the lever on the Duplex tray is set for the proper paper size. (Letter or Legal size/ A4 size)

(3) Open the Properties dialog box in the printer driver. In the **Advanced** tab select Duplex Printing mode, check **Duplex**, and make sure that **Use Duplex tray** has been selected. Select **Duplex Type** and **Binding Offset** if you need, and then click the **OK** button. The printer will print on both sides of the paper automatically.

5. CONTROL PANEL OPERATION

There are four LEDs (Toner, Drum, Paper, Status) and the two control panel buttons (Job Cancel, Go) on the control panel.

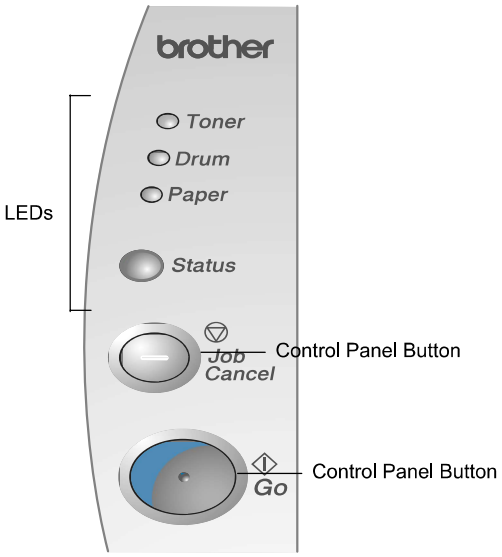

Fig. 2-32

5.1 Control Panel Buttons & LED functions

5.1.1 LEDs

1) **Toner** LED indicates when the Toner is low or empty.
2) **Drum** LED indicates when the Drum is nearing end of life.
3) **Paper** LED indicates when there is a paper jam.
4) **Status** LED will flash and change color depending on the printer status.

5.1.2 Control Panel Buttons

1) **Job Cancel Button** will stop and cancel the print operation in progress.
2) **Go Button** continue printing/ Form feed.

5.2 LED Indications

NOTE: When the power switch is off or the printer is in Sleep mode, all the LEDs are off.

LED	Printer status
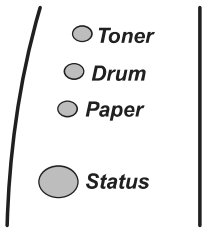 Fig.2-33	**Sleep mode** The power switch is off or the printer is in Sleep mode. Pressing the Go button wakes up the printer from Sleep mode to Warming up mode. After warming up, the printer will be Ready state.
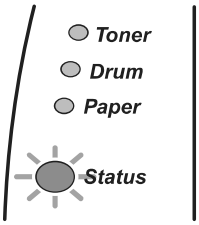 Fig.2-34	**Warming up** The printer is warming up.
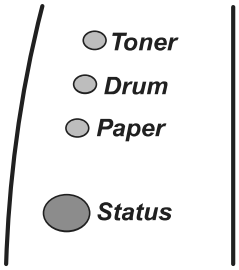 Fig.2-35	**Ready to print** The printer is ready to print.
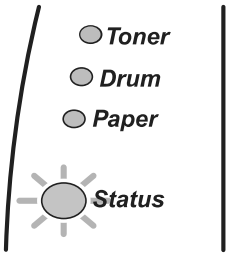 Fig.2-36	**Receiving data** The printer is either receiving data from the computer, processing data in memory or printing the data.
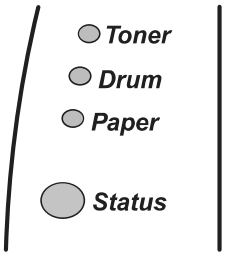 Fig.2-37	**Data remaining in memory** Print data remains in the printer memory. If the **Status** LED is on for a long time and nothing has printed, press the **Go** button to print the remaining data.

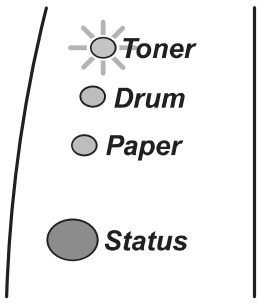 Fig.2-38	**Toner low** Indicates that the toner cartridge is nearly empty. Purchase a new toner cartridge and have it ready for when Toner Empty is indicated. The Toner LED alternates turning on for 2 seconds and off for 3 seconds alternately.
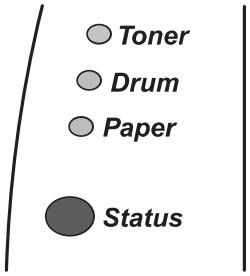 Fig.2-39	**Toner empty** Replace the toner cartridge with a new one. See *1.2 Toner cartridge in Chapter 5.*
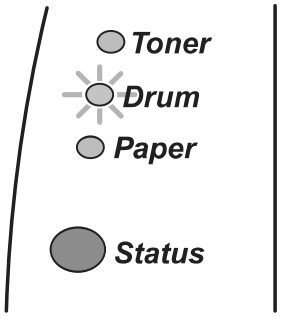 Fig.2-40	**Drum unit near end of life** The drum unit is near the end of its life. We recommend that you obtain a new drum unit to replace the current one. See *1.1 Drum unit in Chapter 5.* The Drum LED alternates turning on for 2 seconds and off for 3 seconds alternately.
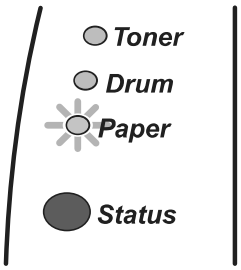 Fig.2-41	**Paper jam** Clear the paper jam referring to *4. Paper Problems Chapter 6.* If the printer does not start printing, press the **Go** button.
	No paper Load paper in the printer. Then press the **Go** button.
	Misfeed Put the paper back in properly, and then press the **Go** button. The printer will start printing again.
	Duplex Size Error (HL-5150D and HL-5170DN) Press the Go button. Specify the printable paper size. The paper size you can use for duplex printing is A4, Letter or Legal.
	No Duplex Tray (HL-5150D and HL-5170DN) Install the Duplex tray into the printer.
	Duplex Lever Error (HL-5150D and HL-5170DN) Move the Duplex lever to the correct position.

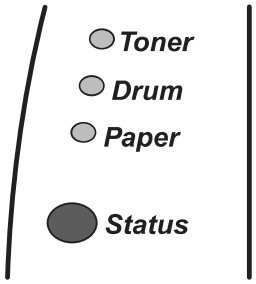 Fig.2-42	**Front Cover Open** Close the front cover of the printer.
	Jam Clear Cover Open Close the jam clear cover of the printer.
	Face up Open (HL-5150D and HL-5170DN: When you use the duplex printing function) Close the face-up output tray of the printer.

5.3 Service call indications

If there is an error that can not be put right, the printer will show that a service call is needed by lighting up all the LEDs as shown in the figure below.

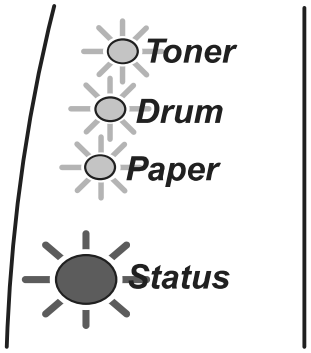

Fig.4-43

If you see the service call indication above, follow the steps below.

(1) Take out the DIMM (Dual Inline Memory Moduele) from your printer, if you have a DIMM installed.
(2) Turn off the power switch, wait a few seconds, and then turn it back on and try to print again.

For example, the LED indication below shows a fixing unit failure.

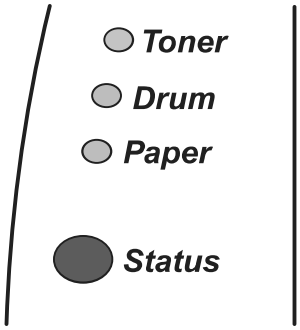

Fig.4-44

Table 1: LED indications after pressing Go and Job Cancel

LEDs	Fixing unit failure	Laser unit failure	Main motor failure	Main PCB failure	Engine PCB failure	DIMM failure
Toner	○			○		
Drum		○			○	
Paper			○			○
Status	●	●	●	○	○	○

5.4 Control Panel Button Operations

The control panel button is used for the following purposes depending on the situation.

Operation	Description
Cancel printing	If you press the Job Cancel button while printing, the printer will immediately stop printing and will then eject the paper.
Wake-up	If the printer is in Sleep mode, press the Go or Job Cancel button to wake the printer up and go to the Ready state.
Form feed	If the yellow Status LED is on, press the Go button. The printer will print any data that is left in the printer memory.
Error recovery	If there is an error, the printer will recover automatically from some errors. If an error is not automatically cleared, press the Go button to clear the error, and then continue to use the printer.
Reprint	If you want to reprint a document that has just been printed, you can do this by pressing and holding down the Go button until all four LEDs are lit and then release the Go button.

5.5 Other Control Features

The printer has the following useful features;

5.5.1 Sleep mode

When the printer does not receive data for a certain period of time (timeout), it enters sleep mode. The default timeout is 5 minutes and it is automatically adjusted to the most suitable time-out setting depending on the frequency of your printer use (Intelligent Sleep Mode).

While the printer is in sleep mode, all the LEDs are off and it is as if it was turned off, but the printer can still receive data from the computer. Receiving a print file or document automatically wakes up the printer to start printing. Pressing the button also wakes up the printer.

NOTE:

- *When the printer goes into sleep mode, the fan will not stop until the printer engine has cooled down. The fan running time varies depending on the sleep mode timeout because the fan running conditions are defined as follows;*

1) The fan runs for 10 minutes whenever printing finishes.

2) The fan runs while the printer is in ready status.

3) The fan runs for at least 5 minutes after the printer goes into sleep mode.

(EX: If the timeout is 5 minutes, the fan will be running for 5 minutes after the printer goes into sleep mode.)

- *Sleep mode allows the print engine to cool, so the temperature of the room and how long the printer has been in sleep mode affects the warm-up time. This warm-up time can take up to 25 seconds. The Ready LED blinks to indicate that the printer is warming up.*
- *You can change the timeout for the sleep mode with the supplied printer driver (all models) . The time-out setting is in the range of 1 to 99 minutes. Refer to the Help section in the printer driver for more information about the sleep mode setting.*

5.5.2 Print a test page

You can use the Go button or the printer driver to print a test page.

<Using control panel button>

(1) Turn off the printer.
(2) Make sure that the front cover is closed and the power cord is plugged in.
(3) Hold down the Go button as you turn on the power switch. All the LEDs light up. Keep the Go button pressed down until all the LEDs except for Toner LED go off. When the Drum, Paper and Status LEDs go off, release the Go button.
(4) Press the Go button again. The printer will print a test page.

<Using the printer driver>

If you are using Brother's Windows PCL printer driver, open the printer folder, then choose and right click the Brother's Windows PCL printer driver. The Print Test Page button is in the General Tab of the "Property".

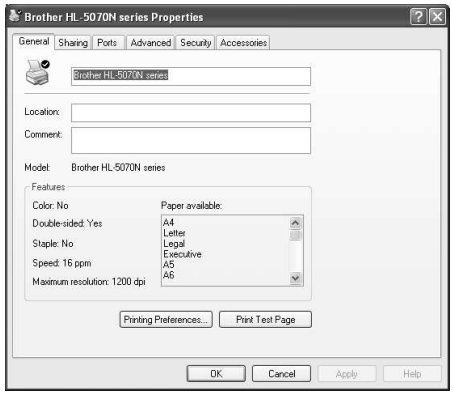

Fig.2-45

5.5.3 Printer Settings

You can print the current settings using the control panel button or printer driver.

<Using control panel button>

(1) Make sure that the front cover is closed and the power cord is plugged in.
(2) Turn on the printer and wait until the printer is in Ready state.
(3) Press the Go button three times. The printer will print the current printer settings.

<Using the printer driver>

If you are using Brother's Windows PCL printer driver, you can print the current printer settings by clicking the Print Settings button in the Support tab.

Fig.2-46

5.5.4 Print fonts (For HL-5140, HL-5150D, and HL-5170DN)

You can print a list of the internal fonts using the control panel button or printer driver.

<Using the control panel button>

(1) Turn off the printer.
(2) Make sure that the front cover is closed and the power cord is plugged in.
(3) Hold down the Go button as you turn on the power switch. All the LEDs light up. Keep the Go button pressed down until all the LEDs except for Toner LED go off. When the Drum, Paper and Status LEDs go off, release the Go button.
(4) Press and hold the Go button again until the Drum LED comes on.
(5) When the Drum LED comes on, release the Go button. The printer will print a list of the internal fonts.

<Using the printer driver (For HL-5140, HL-5150D and HL-5170DN)>

If you are using Brother's Windows PCL printer driver, you can print a list of the internal fonts by clicking the Print Fonts button in the Support tab.

6. NETWORK FUNCTIONS (FOR HL-5170DN)

6.1 LED functions

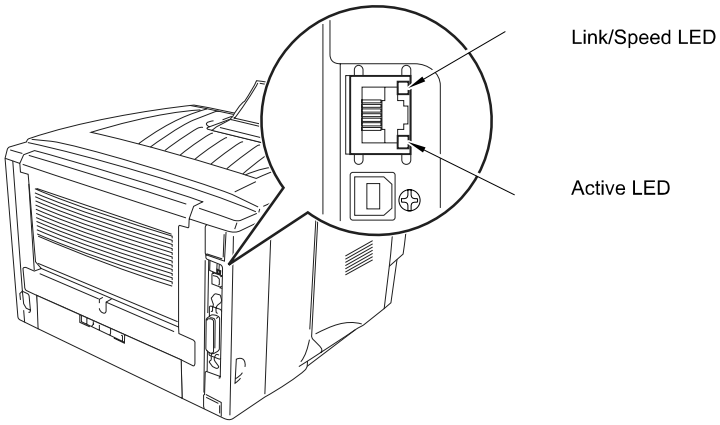

Fig. 2-47

No light:

If both of the two LEDs are off, then the print server is not connected to the network.

Link/Speed LED is orange: Fast Ethernet

Link/Speed LED is green: 10 Base T Ethernet

This Link/Speed LED will be orange if the print server is connected to a 100BaseTX Fast Ethernet network.

This Link/Speed LED will be green if the print server is connected to a 10 Base T Ethernet.

Active LED is yellow:

The Active LED will blink if the print server is receiving or transmitting data.

6.2 Network Factory default setting (For HL-5170DN)

If you wish to reset the print server back to its default settings (resetting all information such as the password and IP address information), please follow these steps;

(1) Turn off the printer.

(2) Make sure that the front cover is closed and the power cord is plugged in.

(3) Hold down the Go button as you turn on the power switch. All the LEDs will light up. Keep the Go button pressed down until all the LEDs except for Toner LED go off. When the Drum, Paper and Status LEDs go off, release the Go button.

(4) Hold down the Go button and keep it pressed down until the yellow Status LED comes on. When the Status LED comes on, release the Go button.

(5) When all the LEDs light up again, the printer will start warming up. The print server has been reset to its default factory settings.

NOTE:

**If you wish to reset the printer and automatically disable the APIPA protocol, follow steps 1 to 4 above, however, hold down the Go button until the Status LED is green, not yellow.*

**For more information on APIPA, see the Network User's Guide or visit http://solutions.brother.com*

7. PAPER TRAY INFORMATION (FOR EUROPE ONLY)

The paper tray fitted to the printer is different from the service manual information for printers shipped to Europe as follows:

(1) The paper tray supplied with the HL-5130/5140/5150D/5170DN printer does not have a paper path.

(2) The paper tray supplied with the LT-5000 (optional Lower Tray Unit, for HL-5140/5150D/5170DN only) has a paper path as shown on the right;

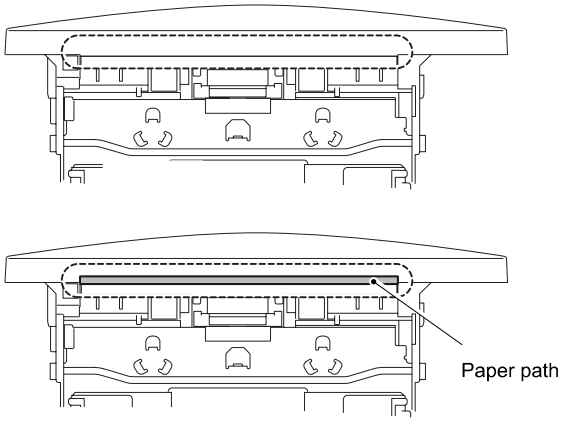

Fig. 2-48

(3) (For HL-5140/5150D/5170DN only)

When you install the LT-5000 unit to the printer, it is necessary to exchange the paper tray already equipped (standard tray) with the LT-5000 unit, and install the standard tray to the lower tray.

Failure to do so will cause paper jams as the paper cannot be fed from the lower tray to the printer body because the paper path will be blocked.

(4) For paper trays supplied as spare parts, there is a paper path so that you can use it as both an upper tray and lower tray.

CHAPTER 3 THEORY OF OPERATION

1. ELECTRONICS

1.1 General Block Diagram

Fig. 3-1 shows a general block diagram. (HL-5130/5140/5150D/5170DN)

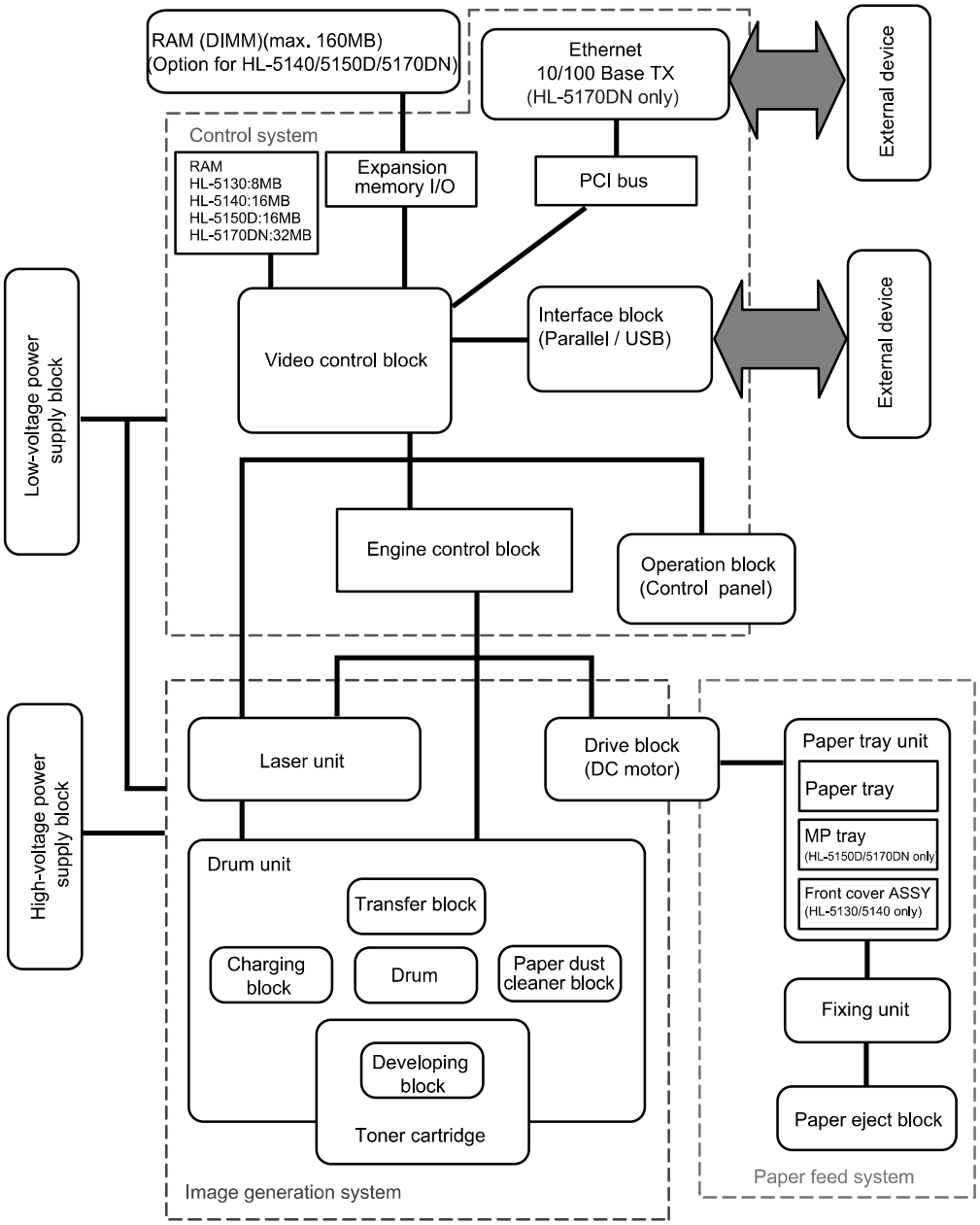

Fig. 3-1

1.2 Main PCB Block Diagram

Fig. 3-2 shows the block diagram of the main PCB. (HL-5130/5140/5150D/5170DN)

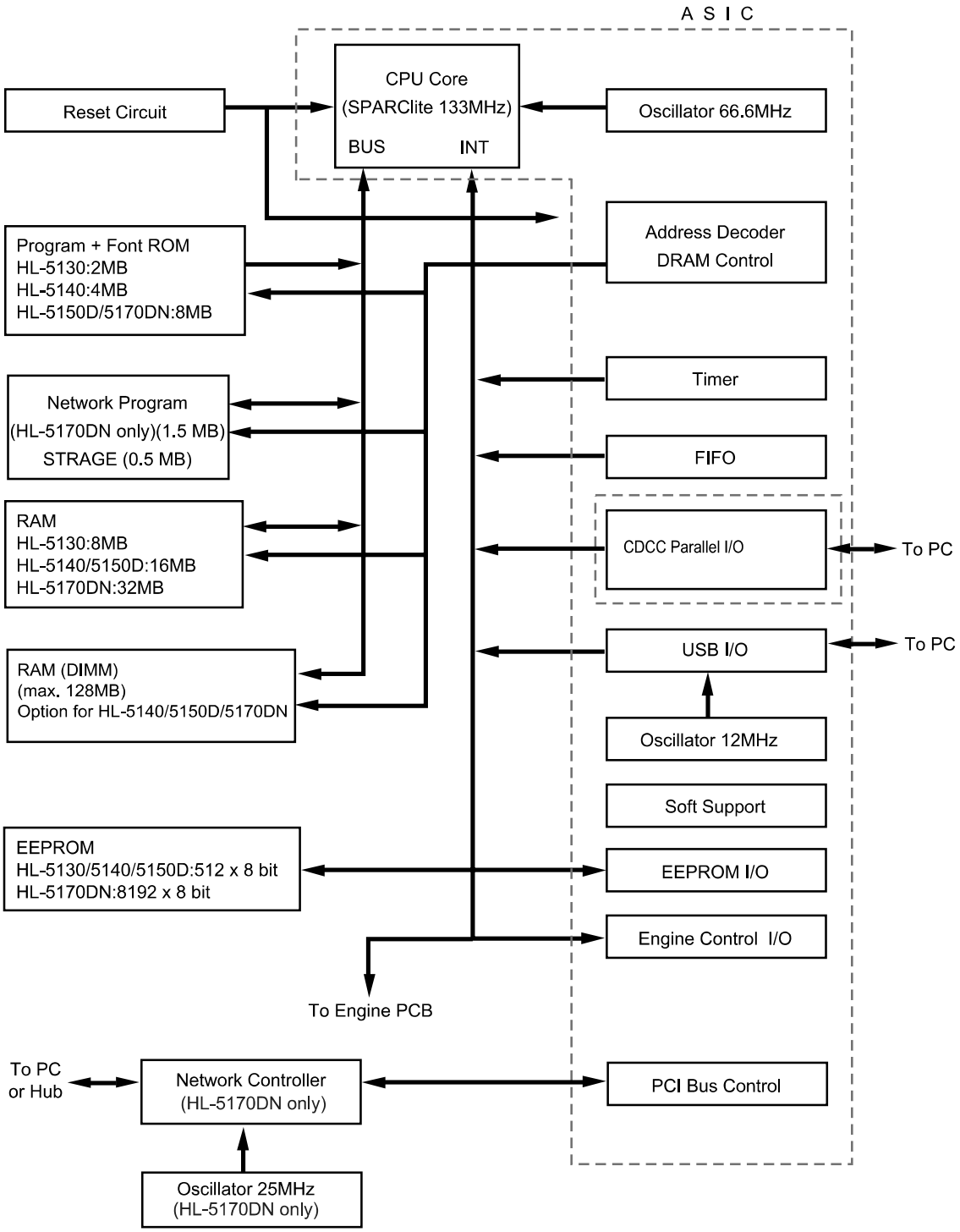

Fig. 3-2

1.3 Main PCB

For the entire circuit diagram of the main PCB, see APPENDIX 1. to 7. 'MAIN PCB CIRCUIT DIAGRAM' in this manual.

1.3.1 CPU

A Fujitsu 32bit RISC CPU, SPARClite is built in the ASIC. While the CPU is driven with a clock frequency of 66.66 MHz in the user logic block, it itself runs at 133.33 MHz, which is generated by multiplying the source clock by two.

<HL-5130/5140/5150D>

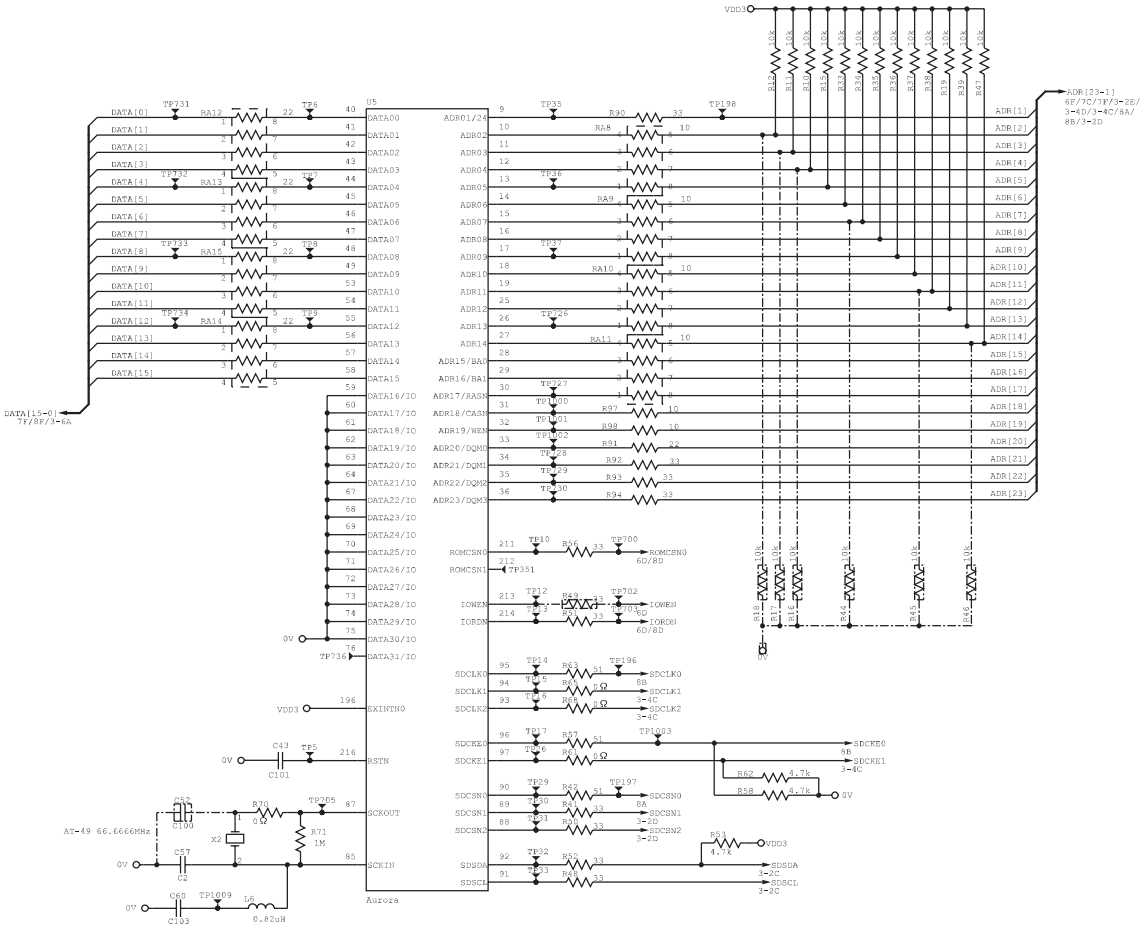

Fig. 3-3

<HL-5170DN>

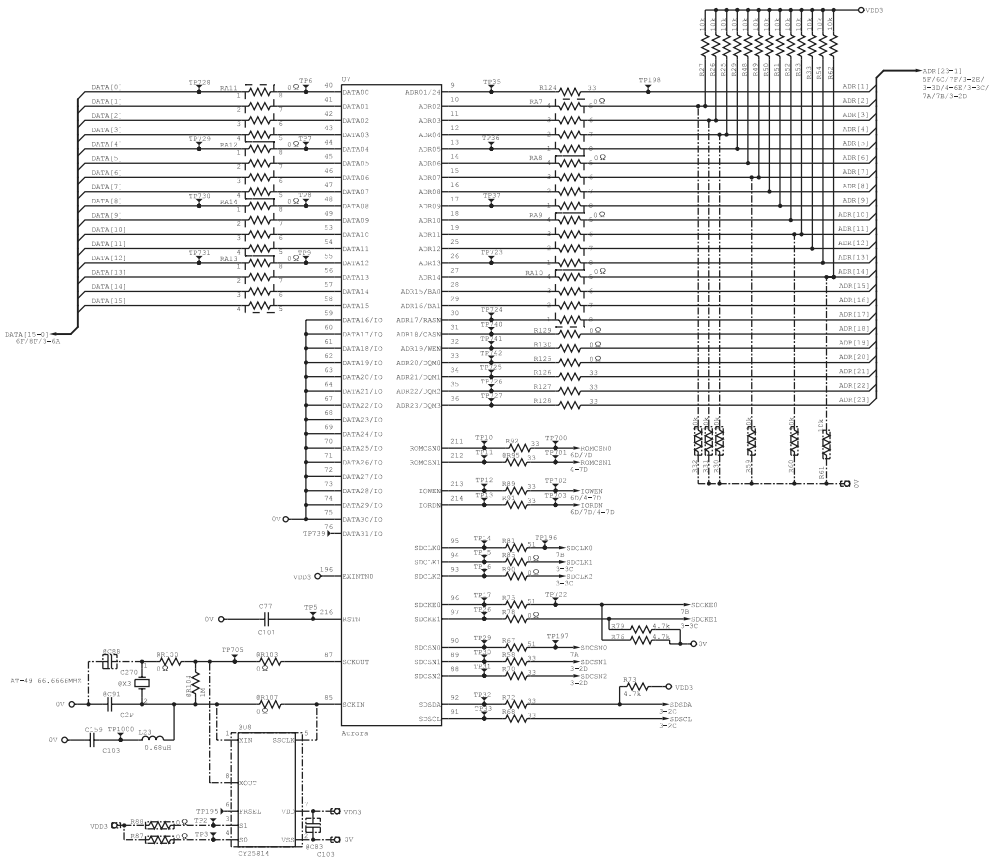

Fig. 3-4

The functions of the interface block communication with external devices are described below;

1.3.2 USB

Stores the data received from the PC into DRAM as controlled by the DMA controller. The transmission speed is 480Mbps or 12Mbps.

<HL-5130/5140/5150D>

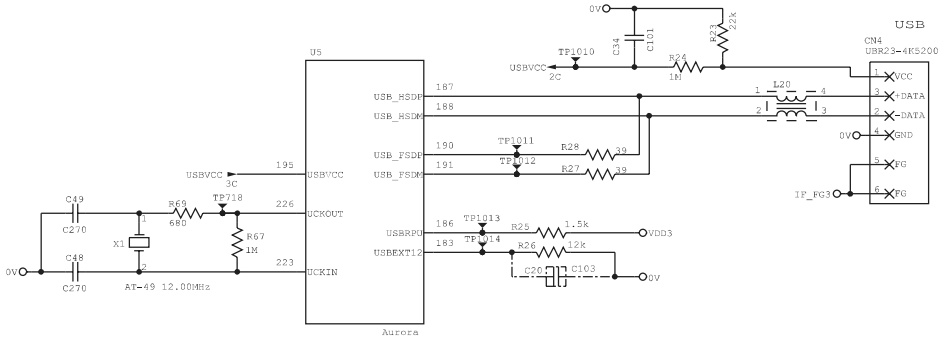

Fig. 3-5

<HL-5170DN>

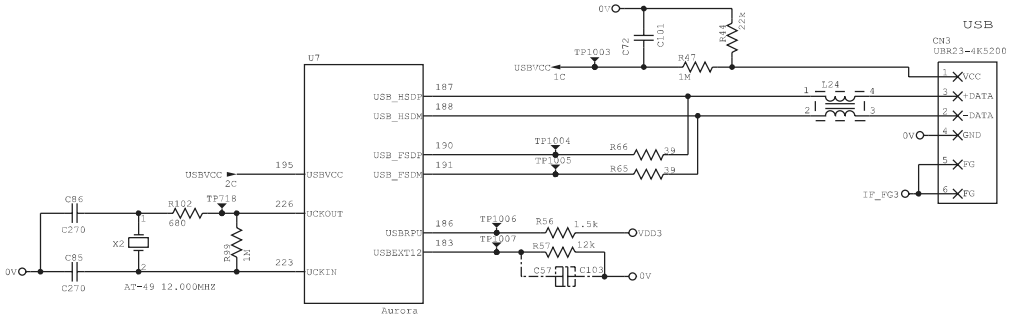

Fig. 3-6

1.3.3 IEEE1284

Stores the data received from the PC into DRAM as controlled by the DMA controller. It is applicable to both normal receiving and bi-directional communication (nibble mode, byte mode, ECP mode).
74LVX161284, 3.3V ⟷ 5.0V level shifter IC stores the pull-up resistance in signal wire at the connector side

<HL-5130/5140/5150D>

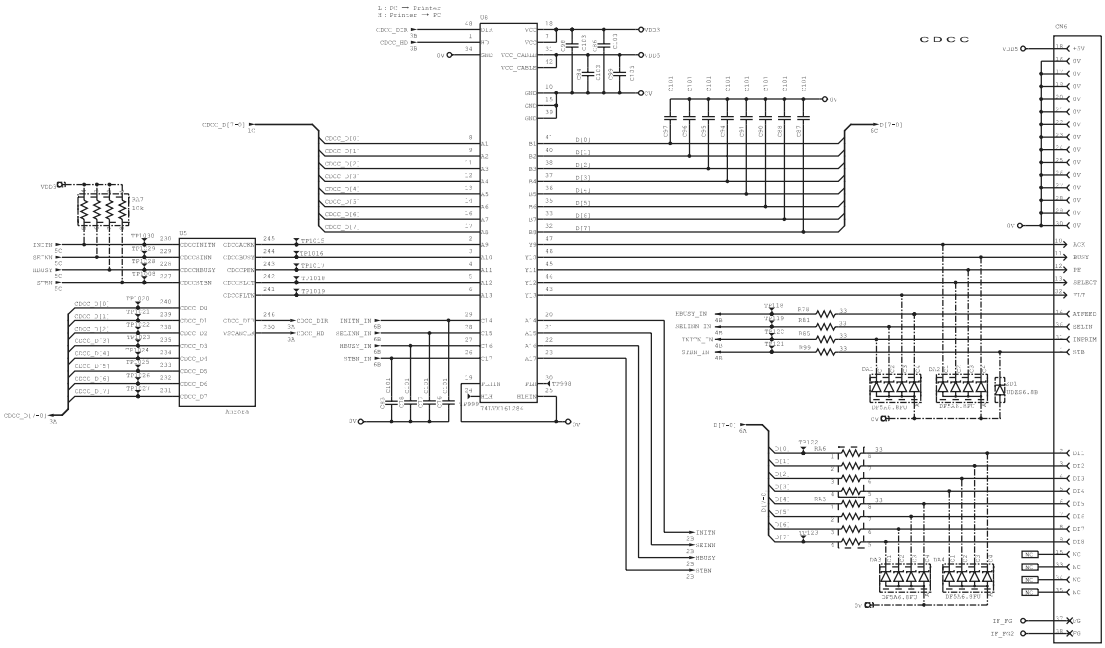

Fig. 3-7

<HL-5170DN>

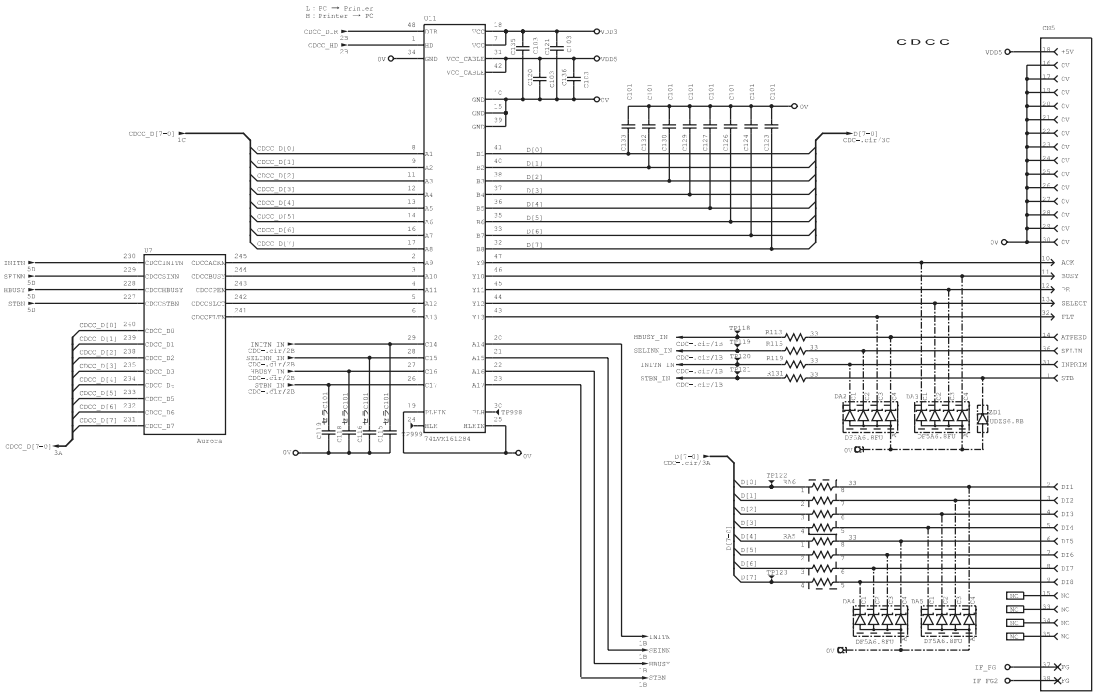

Fig. 3-8

1.3.4 Network Interface

The National Semiconductor brand 10 Base-T/100 Base-TX network controller DP83816 is connected with the ASIC through the PCI bus. The pulse transformer and the Link/Active LED are built in the RJ-45 connector.

<HL-5170DN>

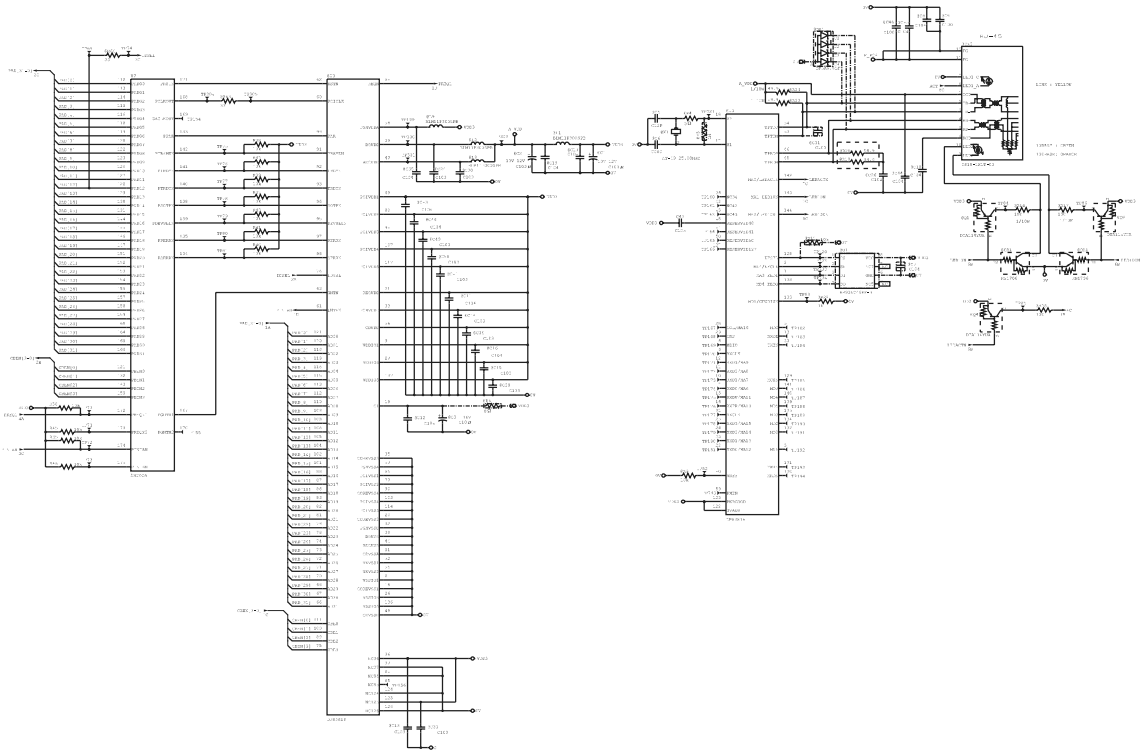

Fig. 3-9

1.3.5 ROM

A 16Mbit ROM (x 16bit) is fitted. (HL-5130)

A 32Mbit ROM (x 16bit) is fitted. (HL-5140)

A 64Mbit ROM (x 16bit) is fitted. (HL-5150D)

<HL-5130/5140/5150D>

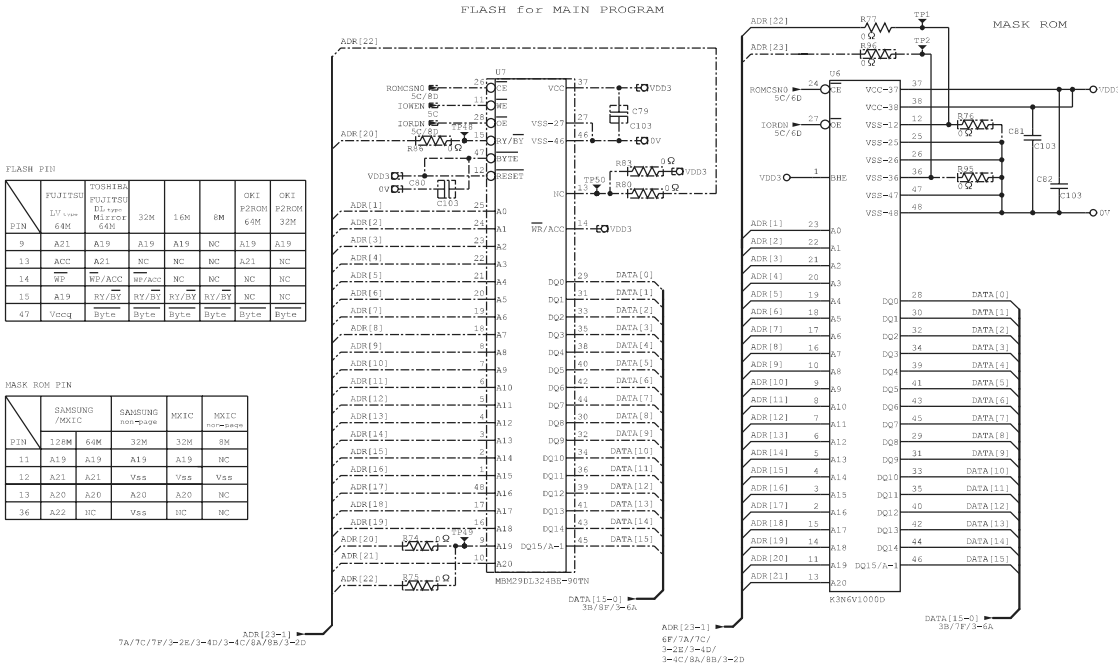

PIN	FUJITSU LV type 64M	TOSHIBA FUJITSU DL type Mirror 64M	32M	16M	8M	OKI P2ROM 64M	OKI P2ROM 32M
9	A21	A19	A19	A19	NC	A19	A19
13	ACC	A21	NC	NC	NC	A21	NC
14	WP	WP/ACC	WP/ACC	NC	NC	NC	NC
15	A19	RY/BY	RY/BY	RY/BY	RY/BY	NC	NC
47	Vccq	Byte	Byte	Byte	Byte	Byte	Byte

PIN	SAMSUNG /MXIC		SAMSUNG non-page	MXIC	MXIC non-page
	128M	64M	32M	32M	8M
11	A19	A19	A19	A19	NC
12	A21	A21	Vss	Vss	Vss
13	A20	A20	A20	A20	NC
36	A22	NC	Vss	NC	NC

Fig. 3-10

A 64Mbit ROM (x 16bit) is fitted. (HL-5170DN)

<HL-5170DN>

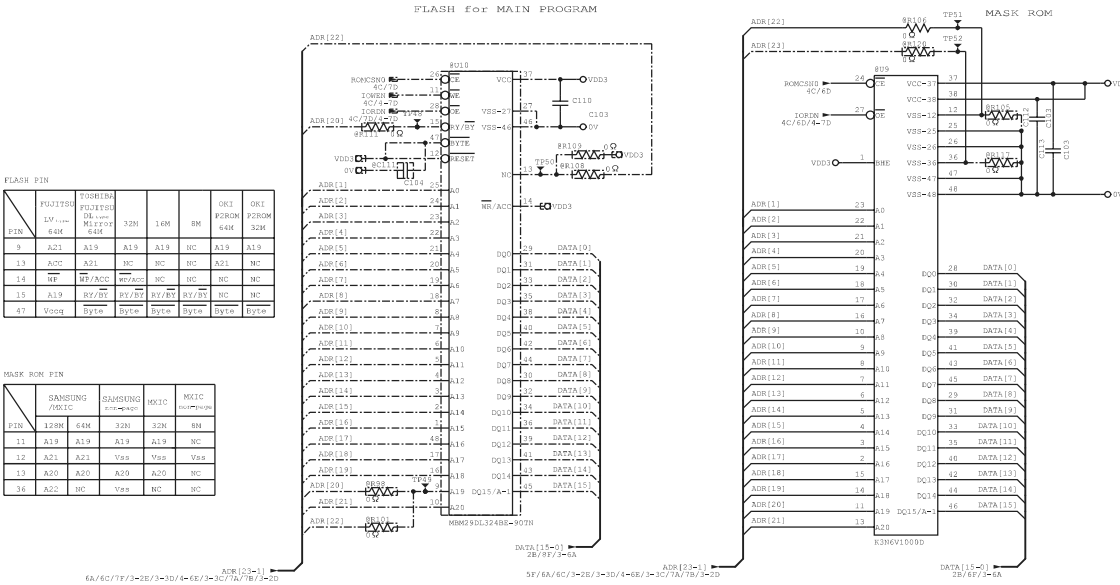

PIN	FUJITSU LV type 64M	TOSHIBA FUJITSU DL type Mirror 64M	32M	16M	8M	OKI P2ROM 64M	OKI P2ROM 32M
9	A21	A19	A19	A19	NC	A19	A19
13	ACC	A21	NC	NC	NC	A21	NC
14	WP	WP/ACC	WP/ACC	NC	NC	NC	NC
15	A19	RY/BY	RY/BY	RY/BY	RY/BY	NC	NC
47	Vccq	Byte	Byte	Byte	Byte	Byte	Byte

PIN	SAMSUNG /MXIC		SAMSUNG non-page	MXIC	MXIC non-page
	128M	64M	32M	32M	8M
11	A19	A19	A19	A19	NC
12	A21	A21	Vss	Vss	Vss
13	A20	A20	A20	A20	NC
36	A22	NC	Vss	NC	NC

Fig. 3-11

1.3.6 Flash ROM

A 16Mbit flash ROM (x 16bit) is fitted. (HL-5170DN)

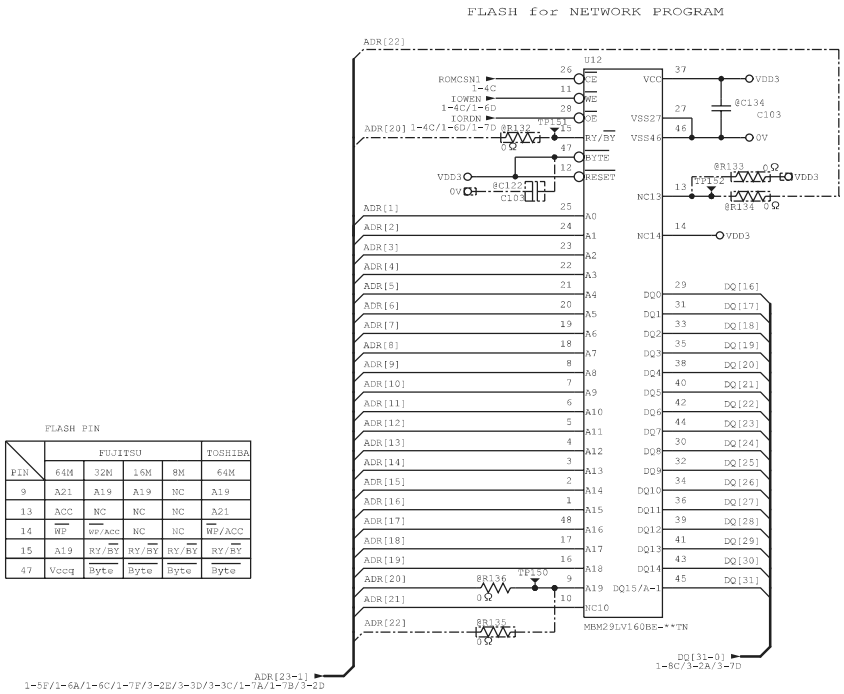

FLASH PIN

PIN	FUJITSU 64M	FUJITSU 32M	FUJITSU 16M	FUJITSU 8M	TOSHIBA 64M
9	A21	A19	A19	NC	A19
13	ACC	NC	NC	NC	A21
14	$\overline{WP}$	$\overline{WP/Acc}$	NC	NC	$\overline{WP/ACC}$
15	A19	$\overline{RY/BY}$	$\overline{RY/BY}$	$\overline{RY/BY}$	$\overline{RY/BY}$
47	Vccq	$\overline{Byte}$	$\overline{Byte}$	$\overline{Byte}$	$\overline{Byte}$

Fig. 3-12

1.3.7 SDRAM

A 64Mbit SDRAM (x 16bit) is used as the RAM. (HL-5130)

A 128Mbit SDRAM (x 16bit) is used as the RAM. (HL-5140/5150D)

<HL-5130/5140/5150D>

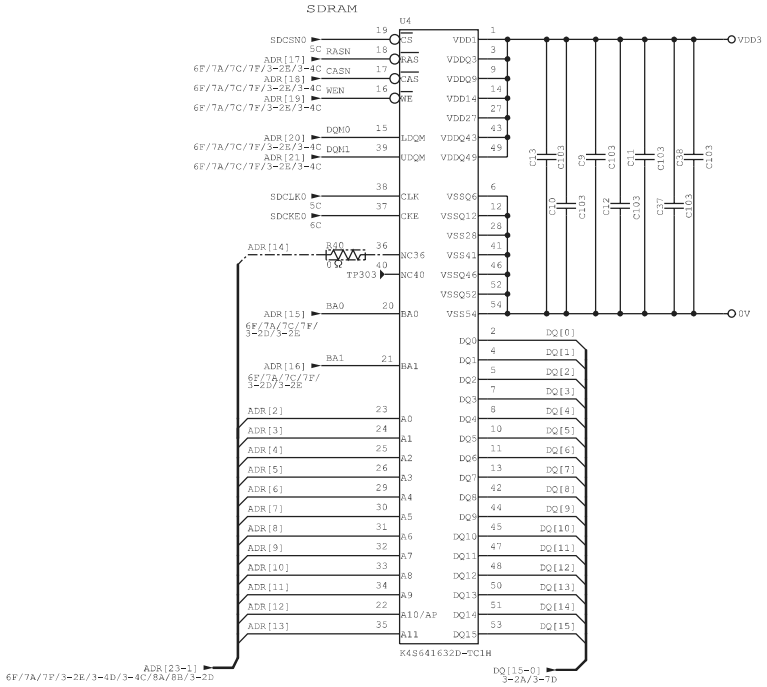

Fig. 3-13

A 256Mbit SDRAM (x 16bit) is used as the RAM. (HL-5170DN)

<HL-5170DN>

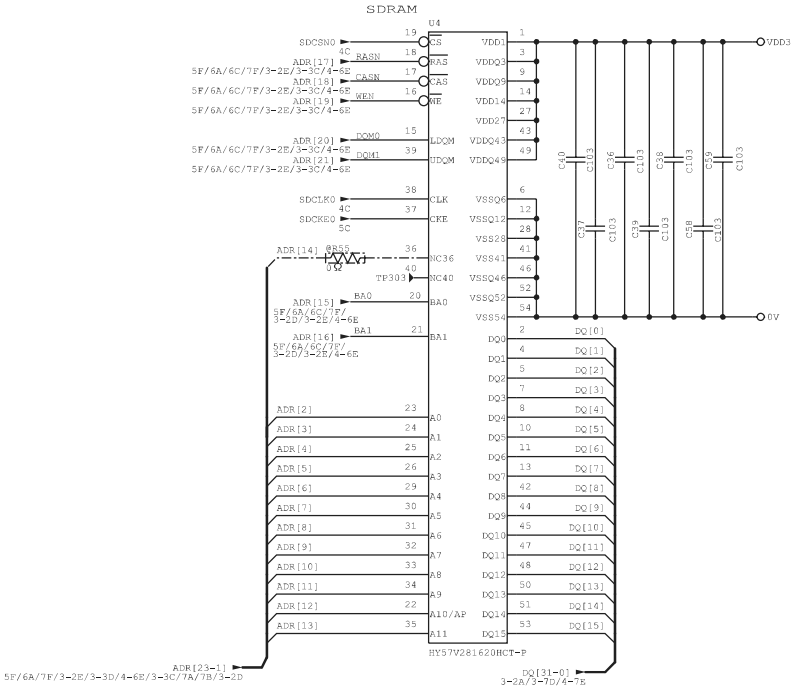

Fig. 3-14

1.3.8 Optional RAM

A 32bit (100 pin) DIMM can be fitted as optional RAM. The main PCB has one slot and the capacity of DIMM can be from 16MB to 128MB.

<HL-5140/5150D>

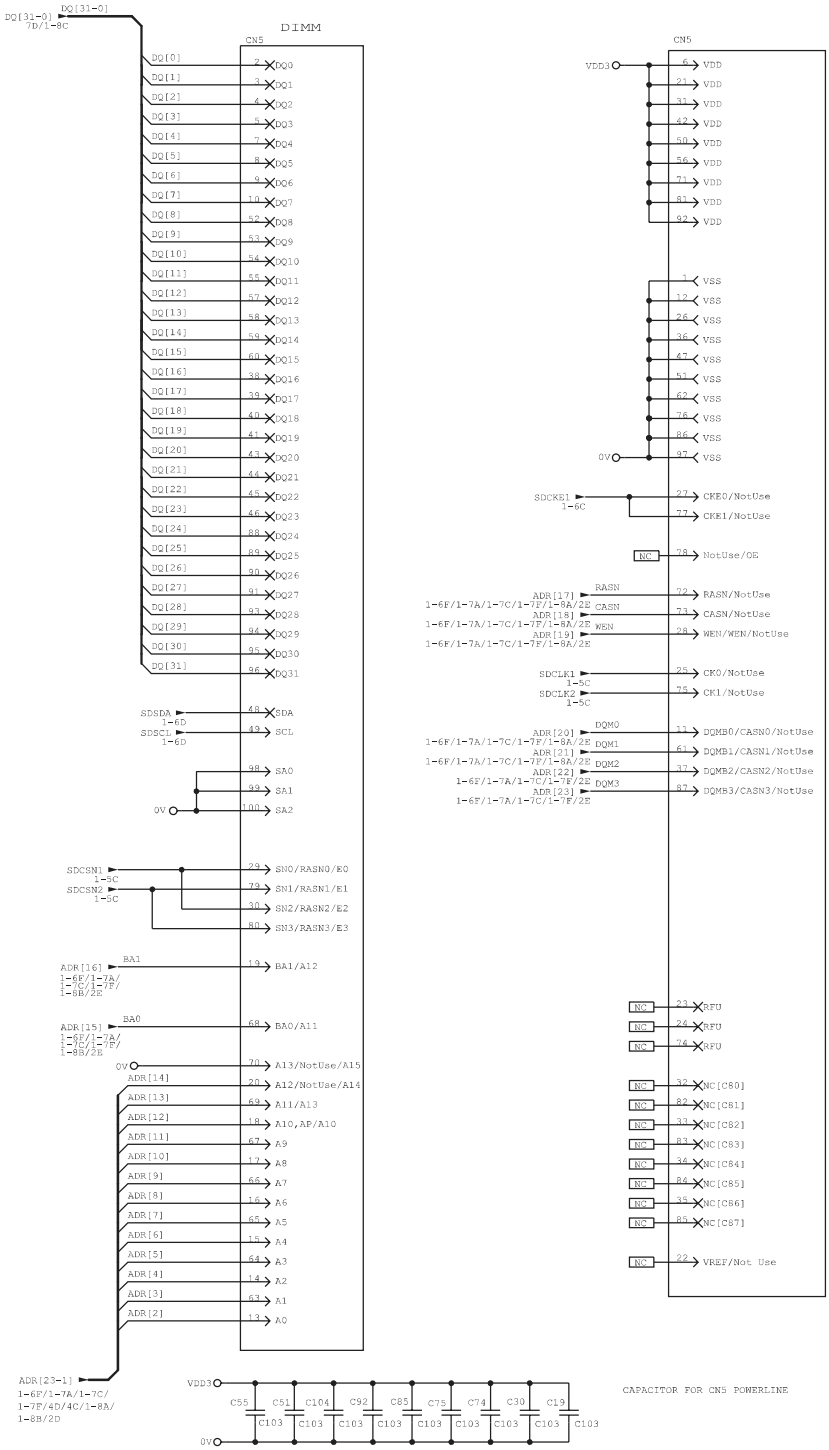

Fig. 3-15

<HL-5170DN>

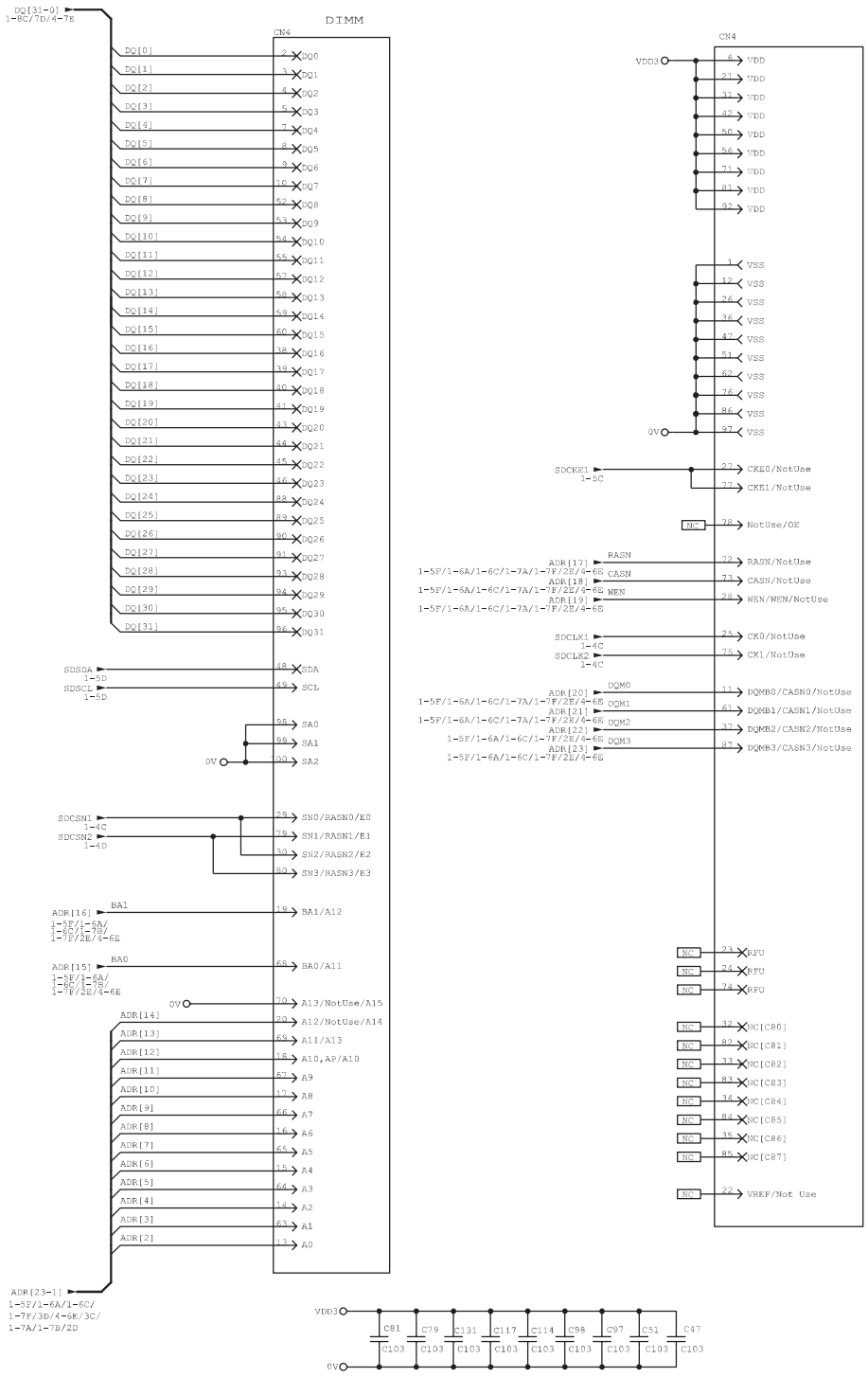

Fig. 3-16

1.3.9 EEPROM

The EEPROM is BR24C04 type of two-wire method with a 512 x 8bit configuration.

<HL-5130/5140/5150D>

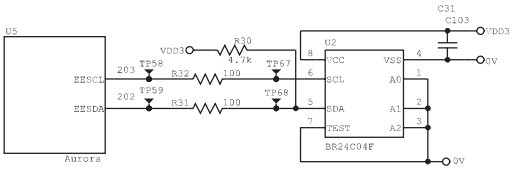

Fig. 3-17

The EEPROM is BR24C64 type of two-wire method with a 8192 x 8bit configuration.

<HL-5170DN>

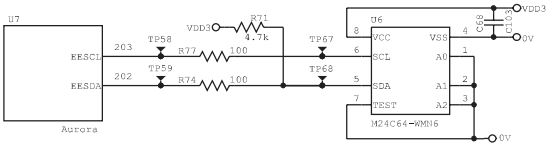

Fig. 3-18

1.3.10 Reset Circuit

The reset IC is a R3112N281C. The reset voltage is 2.8V (typ.) and the LOW period of reset is 22.4ms (typ.)

< HL-5130/5140/5150D >

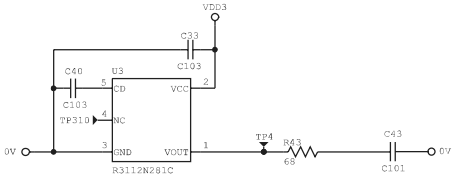

Fig. 3-19

<HL-5170DN>

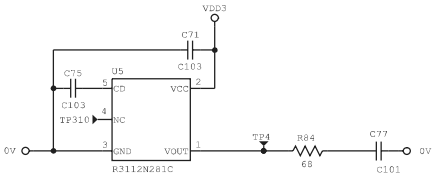

Fig. 3-20

1.3.11 Engine I/O

The interface with the engine PCB is by full-duplex synchronous serial method, of which transfer rate is 520kbps.

<HL-5130/5140/5150D>

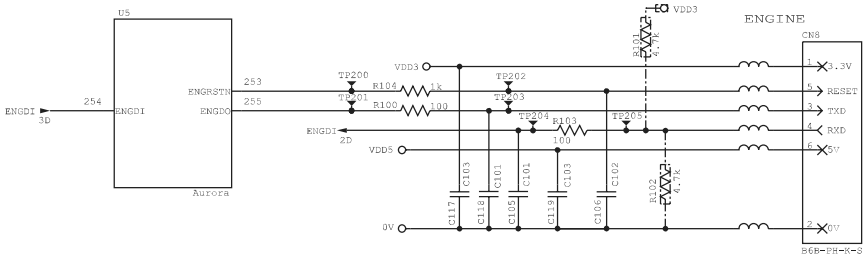

Fig. 3-21

<HL-5170DN>

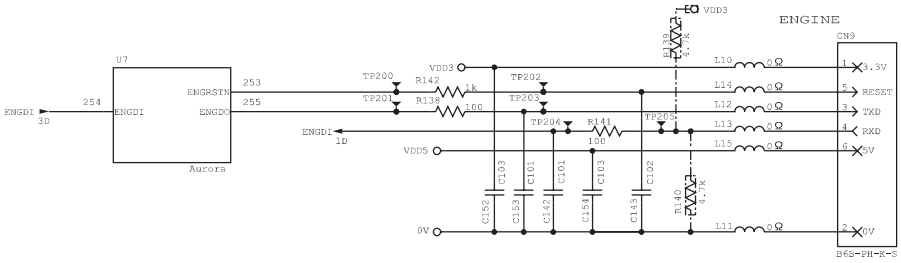

Fig. 3-22

1.3.12 Panel I/O

The interface with the panel PCB is by full-duplex synchronous serial method.

<HL-5130/5140/5150D>

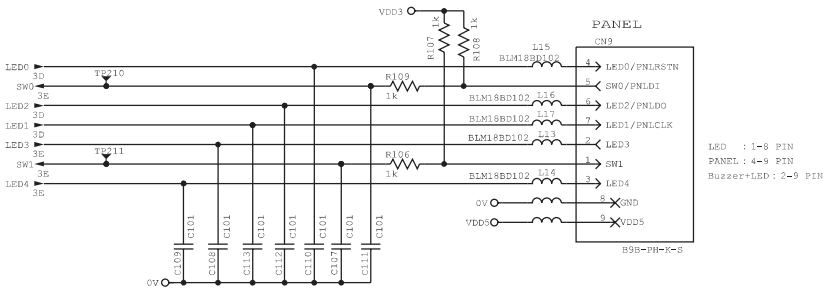

Fig. 3-23

<HL-5170DN>

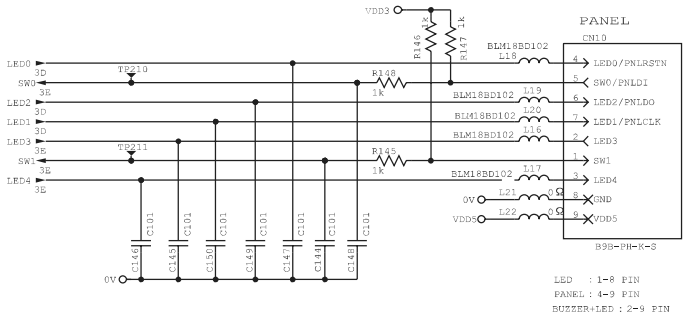

Fig. 3-24

1.3.13 Video I/O

The video signal output from the ASIC is reversed through a transistor and output after being corrected by the buffer IC.

<HL-5130/5140/5150D>

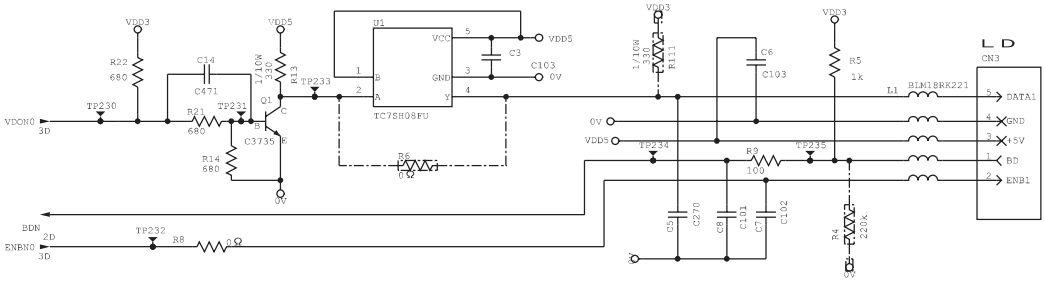

Fig. 3-25

<HL-5170DN>

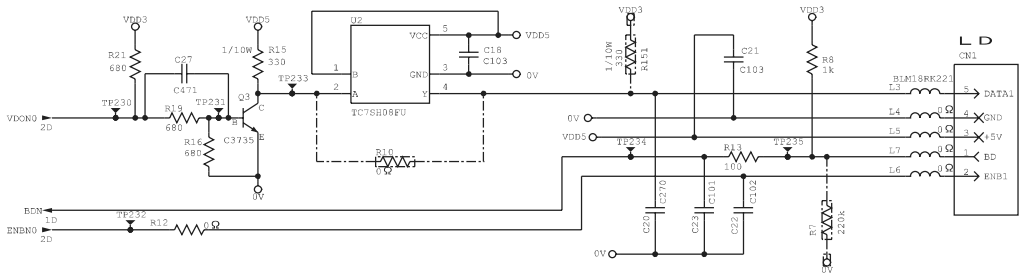

Fig. 3-26

1.3.14 Power Supply

+5V is generated by the 3-pin regulator from astable 7V (8V) supplied from the LVPS. +5V is used for the IEEE1284 interface, the LD PCB and the engine PCB. In addition, +1.9V is generated by the 3-pin regulator from 3.3V supplied from the LVPS. +1.9V is used for the CPU within the ASIC and the logic circuit.

<HL-5130/5140/5150D>

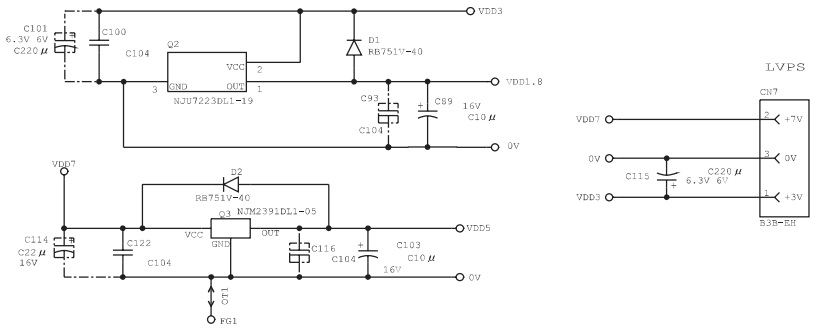

Fig. 3-27

<HL-5170DN>

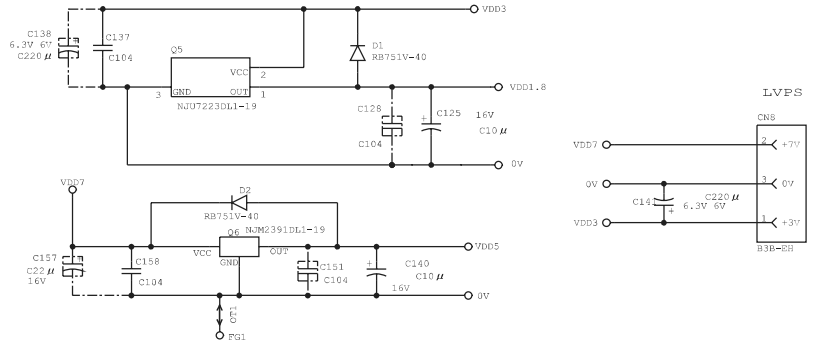

Fig. 3-28

1.4 Engine PCB

The gate array which transforms the serial signal from the main PCB into the parallel signal is mounted on the engine PCB.

The engine PCB controls the following parts by using the transferred signal data;

- Main motor
- Fan motor
- Thermistor
- Polygon motor
- High-voltage power supply
- Toner sensor
- Cover sensor
- Front registration sensor
- Rear registration sensor
- Solenoid
- Upper cassette sensor
- Lower cassette sensor
- Upper paper exit sensor
- Lower paper exit sensor
- Lower cassette exit sensor
- Paper eject sensor
- Fixing unit cover sensor
- Multi-purpose tray paper exit sensor
- DX sensor
- DX rear cover sensor

For the circuit diagram of the engine PCB, see APPENDIX 9. and 10. 'ENGINE PCB CIRCUIT DIAGRAM' in this manual.

Sensor configuration varies according to machine types.

	HL-5130	HL-5140	HL-5150D /5170DN
Upper cassette sensor	×	○	○
Upper paper exit sensor	×	○	○
Lower cassette sensor	×	○	○
Lower paper exit sensor	×	○	○
Lower cassette exit sensor	×	○	○
Multi-purpose tray paper exit sensor	×	×	○

○ : Built-in　　× : Not built-in

1.5 Power Supply

1.5.1 Low-voltage power supply

The power supply uses a switching regulation system to generate the regulated DC power (+3.3V, +8V [non regulated] and +24V), which are converted from the AC line.

The regulated output and the production code of each power supply are listed below;

Regulated Output	Production Code
+3.3V / 1.5A +8V / 0.4A +24V / 2.2A	100V: MPW5806 200V: MPW5706

For the circuit diagram of the low-voltage power supply PCB, see APPENDIX 11. or 12. 'LOW-VOLTAGE POWER SUPPLY PCB CIRCUIT DIAGRAM' in this manual.

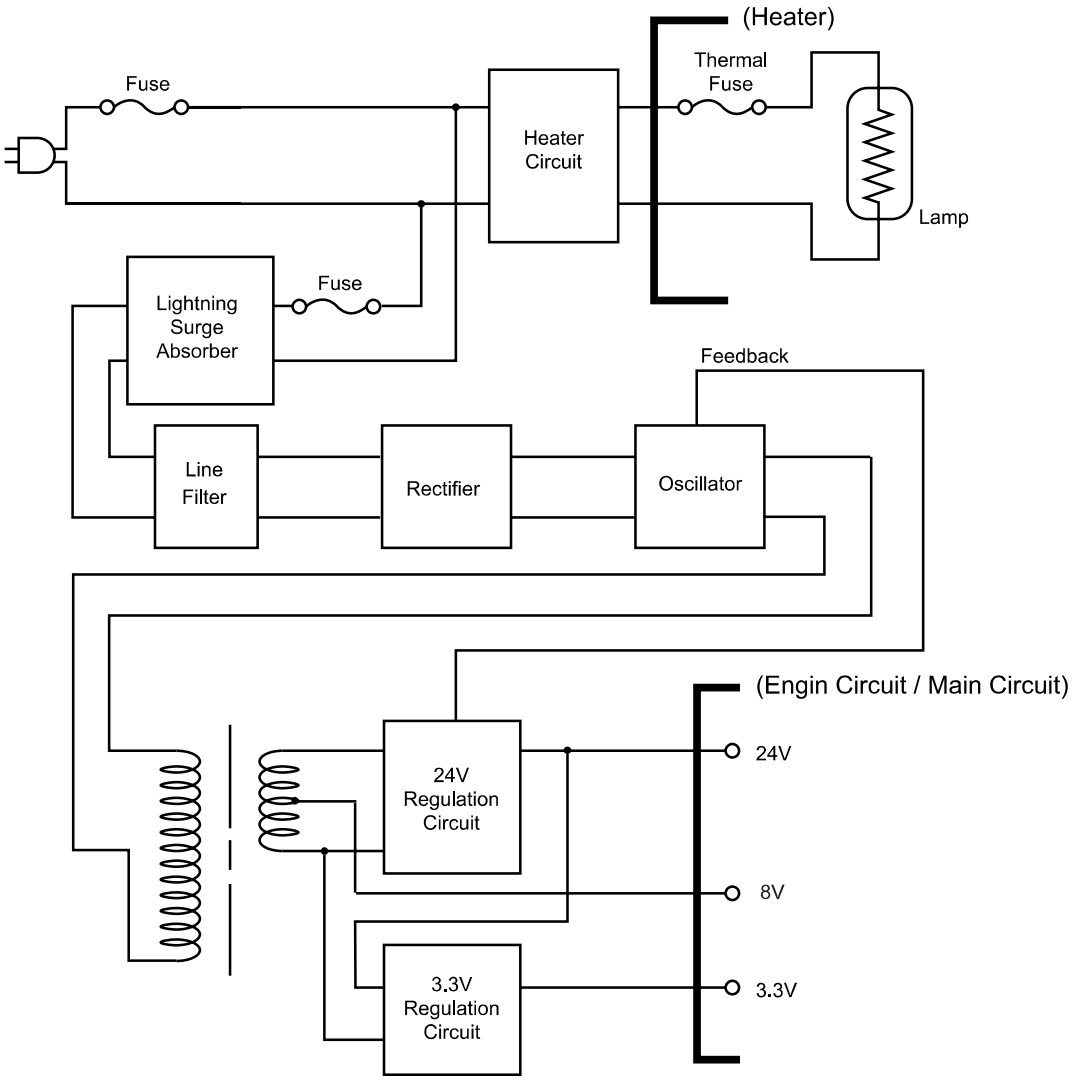

Fig. 3-29

1.5.2 High-voltage power supply

The high-voltage power supply generates and outputs the voltages and currents for the charging, development and transfer functions.

For the circuit diagram of the high-voltage power supply PCB, see APPENDIX 13. 'HIGH-VOLTAGE POWER SUPPLY PCB CIRCUIT DIAGRAM' in this manual.

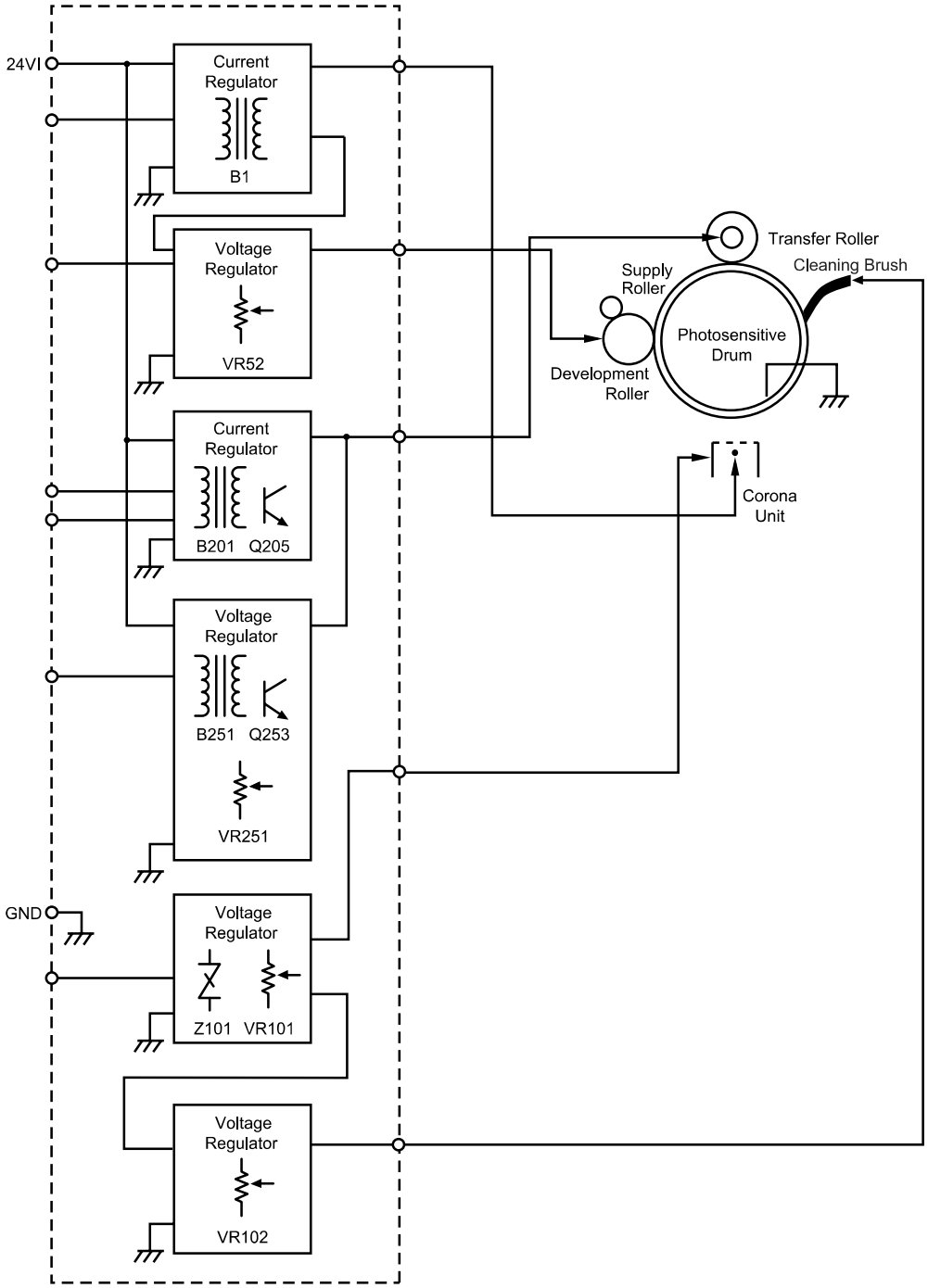

Fig. 3-30

2. MECHANICS

2.1 Overview of Printing Mechanism

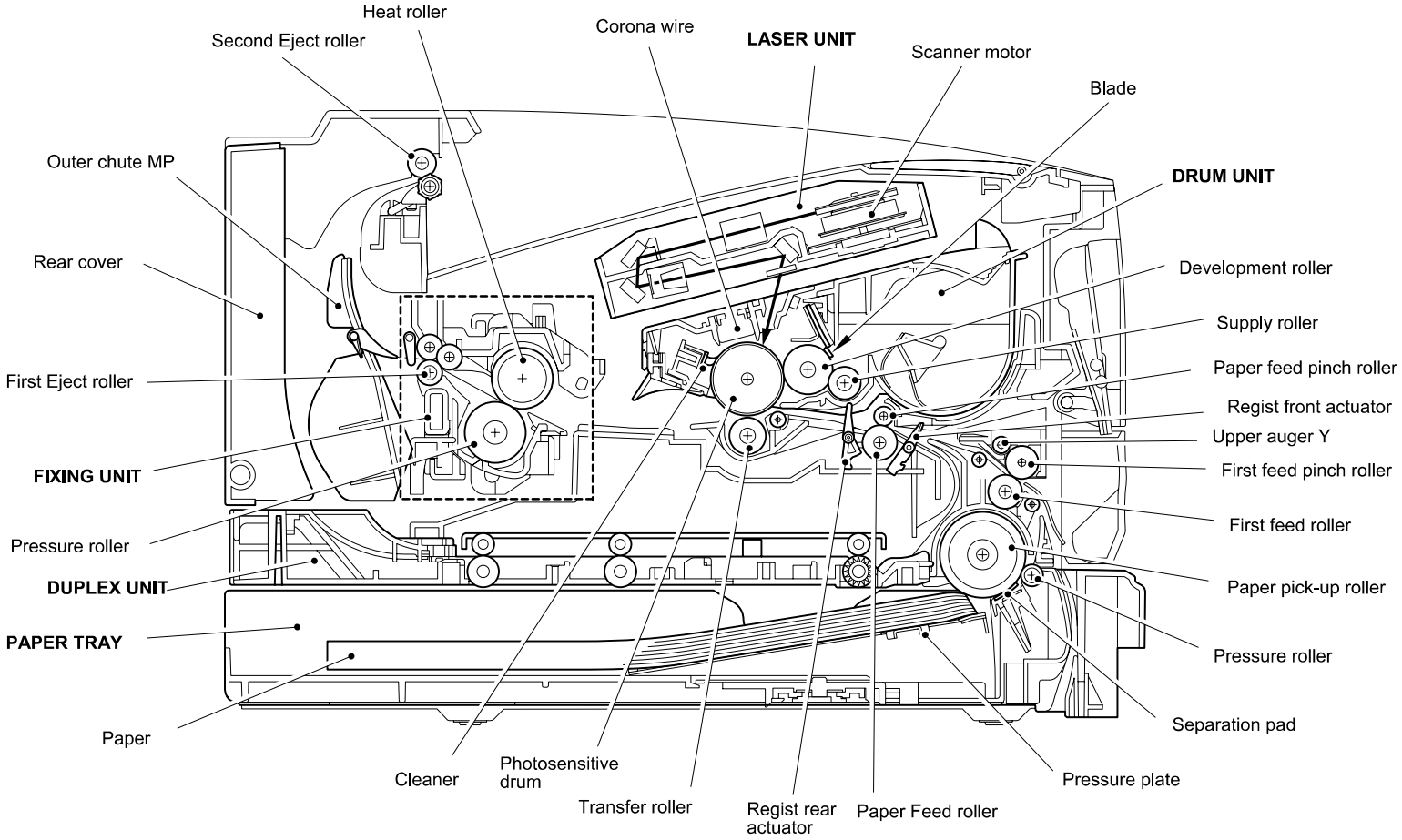

Fig. 3-31

2.2 Paper Transfer

2.2.1 Paper supply

The paper pick-up roller picks up one sheet of paper from the paper tray every time it is rotated and feeds it to the paper feed roller.

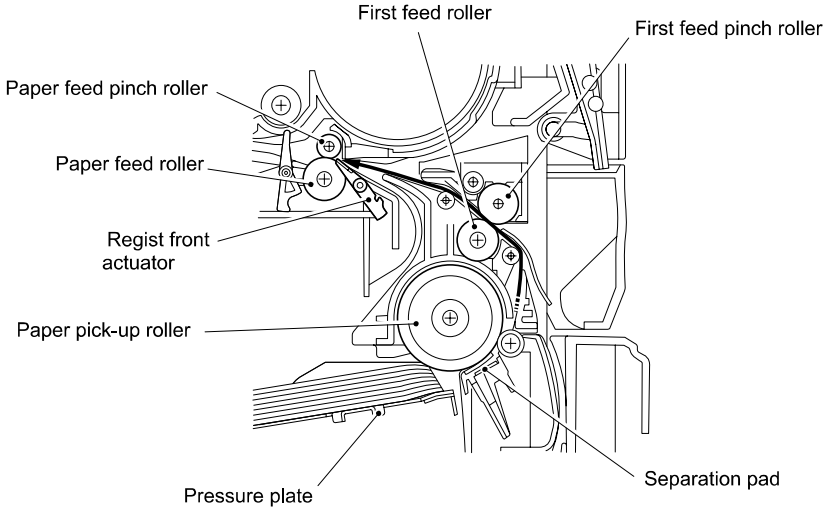

Fig. 3-32

The paper is gripped between the paper pick-up roller and the separation pad and separated into individual sheets.

The pick-up roller is directly connected to the clutch mechanism, whose rotation is stopped by the stopper arm. When the pick-up solenoid is activated, the clutch mechanism is engaged by the solenoid action and the paper pick-up roller is driven. The paper drawn out of the tray by the pick-up roller pushes against the regist front actuator and the paper top position/absence of paper is detected by sensing the motion of the actuator.

Paper particles generated by friction between the separation pad and the paper feed roller are removed by the pressure roller of the paper tray. The removed paper particles are gathered to the dust collecting space of the paper tray. Paper particles generated at the paper feeding path are removed by the first feed pinch roller which comes into contact with the printing area. The removed paper particles are moved to the left and right hand side by means of the upper auger Y which is located near the first feed pinch roller, then they are stored in the dust collecting space of the printer.

2.2.2 Paper registration

After the paper top position is detected by the regist front actuator, the paper, separated into individual sheets by the paper pick-up roller, is fed further for a specified time, and the paper top position reaches the paper feed roller so that the paper skew is adjusted. Then, the solenoid is turned off, the paper feed roller starts turning, and the paper is fed to the transfer block in the drum unit.

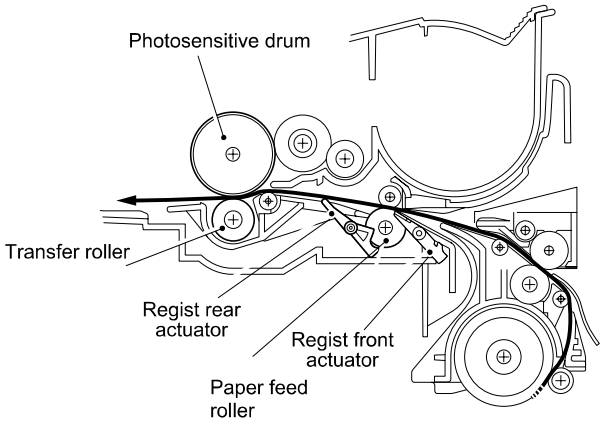

Fig. 3-33

The regist rear actuator in the path from the feed roller to the transfer roller controls the first print position on the paper.

2.2.3 Paper eject

After the printing image on the photosensitive drum is transferred onto the paper, the paper is fed to the fixing unit to fix unfixed toner onto the paper.

Afterwards, the paper is ejected from the fixing unit by the first eject roller in the fixing unit. The paper eject actuator detects whether the paper is ejected correctly or not.

After the paper exits from the first eject roller, the paper is turned by the rear cover and ejected face down into the top output tray through the second eject roller. If the rear cover is open, the paper is ejected face up straight to the printer rear (straight paper path).

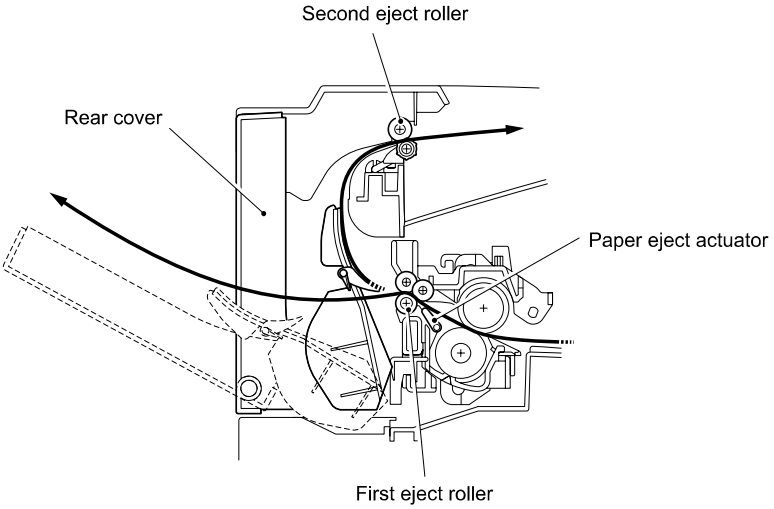

Fig. 3-34