brother®

Brother Laser Printer
SERVICE MANUAL

MODEL: HL-6050/6050D/6050DN

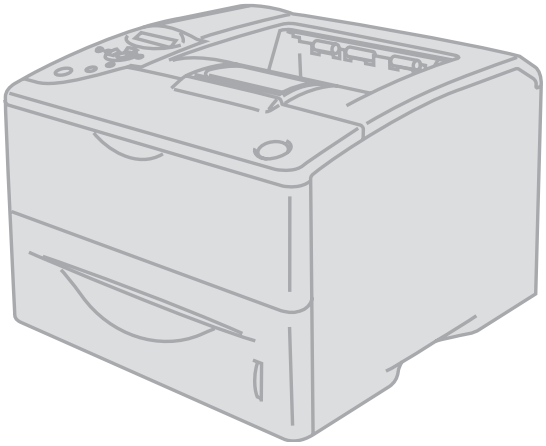

Read this manual thoroughly before maintenance work.

Keep this manual in a convenient place for quick and easy reference at all times.

October 2003
SM-PRN048
(9)

© Copyright Brother Industries, Ltd. 2003

All rights reserved.

No part of this publication may be reproduced in any form or by any means without permission in writing from the publisher.

Specifications are subject to change without notice.

Trademarks:

The brother logo is a registered trademark of Brother Industries, Ltd.

Apple, the Apple Logo, and Macintosh are trademarks, registered in the United States and other countries, and TrueType is a trademark of Apple computer, Inc.

Epson is a registered trademark and FX-80 and FX-850 are trademarks of Seiko Epson Corporation.

Hewlett Packard is a registered trademark and HP LaserJet is a trademark of Hewlett Packard Company.

IBM, IBM PC and Proprinter are registered trademarks of International Business Machines Corporation.

Microsoft and MS-DOS are registered trademarks of Microsoft Corporation.

Windows is a registered trademark of Microsoft Corporation in the U.S. and other countries.

PREFACE

This service manual contains basic information required for after-sales service of the laser printer (hereinafter referred to as "this machine" or "the printer"). This information is vital to the service technician to maintain the high printing quality and performance of the printer.

This service manual covers the **HL-6050/6050D/6050DN** printers.

This manual consists of the following chapters:

CHAPTER 1: GENERAL
Features, specifications, etc.

CHAPTER 2: INSTALLATION AND BASIC OPERATION
Installation conditions, Installation procedures, basic operation of the printer etc.

CHAPTER 3: THEORY OF OPERATION
Basic operation of the mechanical system, the electrical system and the electrical circuits and their timing information.

CHAPTER 4: DISASSEMBLY AND RE-ASSEMBLY
Procedures for disassembling and re-assembling the mechanical system.

CHAPTER 5: PERIODIC MAINTENANCE
Periodical replacements parts, consumable parts, etc.

CHAPTER 6: TROUBLESHOOTING
Reference values and adjustments, troubleshooting image defects, troubleshooting malfunctions, etc.

CHAPTER 7: SERVICE SUPPORT SOFTWARE
Professional menu mode and Service menu mode, etc.

APPENDIX: Connection diagrams, PCB circuit diagrams, etc.

Information in this manual is subject to change due to improvement or redesign of the product. All relevant information in such cases will be supplied in service information bulletins (Technical Information).

A thorough understanding of this printer, based on information in this service manual and service information bulletins, is required for maintaining its print quality performance and for improving the practical ability to find the cause of problems.

TABLE OF CONTENTS

REGULATION.....viii

SAFETY INFORMATION.....x

CHAPTER 1 GENERAL 1-1

1. FEATURES 1-1
2. OVERVIEW 1-3
3. SPECIFICATIONS..... 1-4
   - 3.1 Printing 1-4
   - 3.2 Functions..... 1-5
   - 3.3 Electrical and Mechanical 1-6
   - 3.4 Network (NC-6100H) 1-7
   - 3.5 Paper..... 1-8
     - 3.5.1 Feedable paper 1-8
     - 3.5.2 Paper tray capacity 1-10
     - 3.5.3 Print delivery 1-10
   - 3.6 Printing Area 1-11
   - 3.7 Print Speeds with Various Settings..... 1-15
   - 3.8 Toner Cartridge Weight Information 1-16
4. SERIAL NO. DESCRIPTIONS..... 1-17

CHAPTER 2 INSTALLATION AND BASIC OPERATION..... 2-1

1. CONDITIONS REQUIRED FOR INSTALLATION 2-1
   - 1.1 Power Supply 2-1
   - 1.2 Environment 2-1
   - 1.3 System Requirements for Brother Printer Solution for Windows® 2-2
2. UNPACKING 2-3
3. INSTALL THE PRINTER 2-4
   - 3.1 For All Users 2-4
     - 3.1.1 Install the drum unit assembly..... 2-5
     - 3.1.2 Load paper into the paper tray 2-6
     - 3.1.3 Print a test page 2-7
     - 3.1.4 Setting our language on the control panel..... 2-7
4. CONTROL PANEL OPERATION 2-8
   - 4.1 Data LED Indications 2-8
   - 4.2 Panel Switches Functions..... 2-9
     - 4.2.1 Go button 2-9
     - 4.2.2 Job Cancel button 2-9
     - 4.2.3 Reprint button 2-10
     - 4.2.4 + & - button 2-14
     - 4.2.5 Set button..... 2-14
     - 4.2.6 Back button 2-14
   - 4.3 LCD Display 2-14

4.3.1 Backlights 2-15
4.3.2 Printer status messages 2-15
4.4 How to Use the Control Panel 2-16
4.5 Control Panel Setting Menu 2-17
4.5.1 Information 2-18
4.5.2 Paper 2-19
4.5.3 Quality 2-19
4.5.4 Setup 2-20
4.5.5 Print menu 2-21
4.5.6 Network (HL-6050DN only) 2-25
4.5.7 Interface 2-26
4.5.8 Reset menu 2-26
4.5.9 Set IP address 2-27
4.5.10 About emulation modes 2-28
4.5.11 List of factory settings 2-28
4.6 Other Control Features 2-32
4.6.1 Sleep mode 2-32
5. NETWORK BOARD OPERATION 2-33
5.1 Installing the Network Board 2-33
5.2 Functions 2-35
5.2.1 LED functions 2-35
5.2.2 Factory default setting 2-35
6. PAPER TRAY INFORMATION (FOR EUROPE ONLY) 2-36

CHAPTER 3 THEORY OF OPERATION 3-1

1. ELECTRONICS 3-1
1.1 General Block Diagram 3-1
1.2 Main PCB Block Diagram 3-2
1.3 Main PCB 3-3
1.3.1 CPU 3-3
1.3.2 USB 3-4
1.3.3 IEEE1284 3-4
1.3.4 Network Interface 3-5
1.3.5 ROM 3-6
1.3.6 Flash ROM 3-7
1.3.7 SDRAM 3-8
1.3.8 Optional RAM 3-9
1.3.9 Compact Flash 3-10
1.3.10 EEPROM 3-10
1.3.11 Reset Circuit 3-11
1.3.12 Engine I/O 3-11
1.3.13 Panel I/O 3-11
1.3.14 Video I/O 3-12
1.3.15 Sensor I/O 3-13
1.3.16 Power Supply 3-13
1.4 Engine PCB 3-14
1.5 Power Supply 3-15
1.5.1 Low-voltage Power Supply 3-15
1.5.2 High-voltage Power Supply 3-16

2. MECHANICS 3-17
2.1 Overview of Printing Mechanism 3-17
2.2 Paper Transfer 3-18
2.2.1 Paper supply 3-18
2.2.2 Paper tray lift function 3-18
2.2.3 Paper particle remover unit 3-19
2.2.4 Paper registration 3-20
2.2.5 Paper eject 3-21
2.2.6 Duplex printing (HL-6050D/6050DN only) 3-21
2.3 Sensors 3-22
2.3.1 Document cover sensor 3-22
2.3.2 Fixing sensor PCB ASSY 3-22
2.3.3 Photo interrupter 3-23
2.3.4 Toner sensor PCB unit / Toner LED PCB ASSY 3-23
2.3.5 Relay PCB unit 3-24
2.3.6 PE/PO sensor PCB ASSY 3-24
2.3.7 DEV sensor ASSY 3-25
2.3.8 MP sensor PCB ASSY 3-25
2.4 Drum Unit 3-26
2.4.1 Photosensitive drum 3-26
2.4.2 Primary charger 3-26
2.4.3 Transfer roller 3-26
2.4.4 Cleaner 3-26
2.5 Toner Cartridge 3-27
2.5.1 Toner empty mode 3-27
2.5.2 New toner detection boss 3-28
2.6 Print Process 3-29
2.6.1 Charging 3-29
2.6.2 Exposure stage 3-29
2.6.3 Pressure contact and release unit 3-31
2.6.4 Developing 3-31
2.6.5 Transfer 3-32
2.6.6 Fixing stage 3-32

CHAPTER 4 DISASSEMBLY AND RE-ASSEMBLY 4-1

1. SAFETY PRECAUTIONS 4-1
2. DISASSEMBLY FLOW 4-2
3. DISASSEMBLY PROCEDURE 4-3
3.1 AC Cord 4-3
3.2 Drum Unit 4-3
3.3 Paper Tray 4-4
3.4 Access Cover 4-7
3.5 Network Board 4-7
3.6 DX Feed ASSY 4-8
3.7 Rear Cover ASSY 4-12
3.8 Top Cover ASSY 4-13
3.9 Side Cover L 4-15
3.10 Side Cover R 4-16
3.11 MP Paper Guide 1 ASSY 4-16

3.12 Process Unit Cover ASSY / MP Cover ASSY 4-17
3.13 Exit Roller Unit 4-18
3.14 Laser Unit 4-20
3.15 Fixing Unit 4-21
3.16 Separation Roller ASSY / Feed Roller ASSY 4-32
3.17 Feed MP Unit 4-33
3.18 Fan Motor 80 ASSY 4-34
3.19 Filter 4-35
3.20 Engine PCB 4-35
3.21 Main PCB 4-36
3.22 Fan 40 4-36
3.23 LVPS 4-37
3.24 Photo Interrupter 4-39
3.25 T1 Solenoid ASSY / MP Solenoid ASSY 4-39
3.26 Clutch Spring Separating 4-41
3.27 Magnetic Clutch Regist /Collar 6 4-41
3.28 Main Motor 4-42
3.29 Developer Clutch 4-43
3.30 Develop Joint 4-43
3.31 Interlock SW ASSY 4-44
3.32 Relay PCB L ASSY 4-44
3.33 DEV Sensor ASSY 4-45
3.34 Toner LED PCB ASSY 4-45
3.35 Gear 18/48 / Gear Collar 4-46
3.36 Gear 24 4-46
3.37 Plate Motor ASSY 4-47
3.38 DX Sensor PCB 4-48
3.39 Ejection Solenoid ASSY 4-49
3.40 Size SW PCB ASSY / Size SW Spring 4-50
3.41 Toner Sensor PCB Unit 4-51
3.42 HVPS PCB ASSY 4-51
3.43 Relay PCB Unit 4-52
3.44 Regist Actuator Front / Regist Actuator Rear / Regist Actuator Spring 4-52
3.45 PE/PO Sensor PCB ASSY 4-53
3.46 Tray PE Actuator 4-54
3.47 RE Roller 4-56
3.48 F Chute Unit 4-56
3.49 MP-PE Sensor Actuator 1 / MP Sensor PCB ASSY 4-57

4. PACKING 4-62
5. GUIDELINES FOR LEAD FREE SOLDER 4-63
6. LUBRICATION 4-66
7. HARNESS ROUTING 4-71

CHAPTER 5 PERIODIC MAINTENANCE 5-1

1. CONSUMABLE PARTS 5-1
   - 1.1 Drum Unit 5-1
   - 1.2 Toner Cartridge 5-4
2. PERIODICAL REPLACEMENT PARTS 5-7
   - 2.1 Replacing the Fixing Unit 5-8
   - 2.2 Replacing the Paper Feeding Kit Tray 5-12
   - 2.3 Replacing the Paper Feeding Kit MP 5-16
   - 2.4 Replacing the Laser Unit 5-20
3. PERIODICAL CLEANING 5-26
   - 3.1 Cleaning the Printer Exterior 5-26
   - 3.2 Cleaning the corona wire 5-27
   - 3.3 Cleaning the Scanner Window 5-28
   - 3.4 Cleaning the Electrical Terminals 5-29
4. SERVICE INFORMATION 5-30

CHAPTER 6 TROUBLESHOOTING 6-1

1. INTRODUCTION 6-1
   - 1.1 Initial Check 6-1
   - 1.2 Warnings for Maintenance Work 6-2
   - 1.3 Identify the Problem 6-3
2. OPERATOR CALLS & SERVICE CALLS 6-4
   - 2.1 Operator Calls 6-4
   - 2.2 Service Calls 6-7
3. PAPER PROBLEMS 6-11
   - 3.1 Paper Loading Problems 6-11
   - 3.2 Paper Jams 6-13
     - 3.2.1 Clearing jammed paper 6-14
     - 3.2.2 Causes & countermeasures 6-21
   - 3.3 Paper Feeding Problems 6-22
4. SOFTWARE SETTING PROBLEMS 6-24
5. MALFUNCTIONS 6-27
6. IMAGE DEFECTS 6-33
   - 6.1 Image Defect Examples 6-33
   - 6.2 Troubleshooting Image Defect 6-34
   - 6.3 Location of Grounding Contacts 6-52
     - 6.3.1 Process unit 6-52
     - 6.3.2 Printer body & Paper tray 6-52
7. INCORRECT PRINTOUT 6-53
8. NETWORK PROBLEM 6-56
   - 8.1 Installation Problem 6-56
   - 8.2 Intermittent Problem 6-57
   - 8.3 TCP/IP Troubleshooting 6-58
   - 8.4 UNIX Troubleshooting 6-58
   - 8.5 Windows NT/LAN Server (TCP/IP) Troubleshooting 6-59

8.6 Windows 95/98/Me (or later) Peer to Peer Print (LPR) Troubleshooting 6-59
8.7 Windows 95/98/Me Peer to Peer (HP JetAdmin Compatible Method) Troubleshooting 6-60
8.8 Windows 95/98/Me/NT 4.0 Peer to Peer Print (NetBIOS) Troubleshooting 6-60
8.9 Brother Internet Print (TCP/IP) Troubleshooting 6-60
8.10 Windows 95/98/Me/2000/XP IPP Troubleshooting 6-61
8.11 Novell Netware Troubleshooting 6-62
8.12 AppleTalk Troubleshooting 6-63
8.13 DLC/LLC Troubleshooting 6-63
8.14 Web Browser Troubleshooting (TCP/IP) 6-63

CHAPTER 7 SERVICE SUPPORT SOFTWARE 7-1

1. ENTERING HIDDEN FUNCTION MENU MODES 7-1
2. PROFESSIONAL MENU MODE 7-2
   2.1 Enabling and Disabling Professional Menu Mode 7-2
   2.2 Function Table 7-3
3. SERVICE MENU MODE 7-8
   3.1 Entering the Service Menu Mode 7-8
   3.2 Function Table 7-8
4. OTHER HIDDEN FUNCTION MENUS 7-13
   4.1 Hidden Function Menus Enabled by Pressing Switch(es) When Turning the Machine on 7-13
   4.2 Parts Life Reset Function 7-14
5. PRINT SETTINGS 7-15
   5.1 Printing out the Print Settings 7-15
   5.2 Contents Overview 7-16
      5.2.1 Page 1 7-16
      5.2.2 Page 2 7-16
      5.2.3 Page 3 (HL-6050DN only) 7-17
6. HOW TO USE THE SELF-DIAGNOSTICS TOOLS 7-18
   6.1 Troubleshooting for Printer won't print 7-18
   6.2 Diagnostics 7-19
   6.3 Printer Information 7-21
7. NVRAM DEFAULT VALUE 7-22
8. HOW TO REWRITE HL-6050/6050D/6050DN FLASH ROM 7-23
9. NVRAM BACKUP 7-29

APPENDIX

1. MAIN PCB CIRCUIT DIAGRAM, HL-6050 (1/6) A-1
2. MAIN PCB CIRCUIT DIAGRAM, HL-6050 (2/6) A-2
3. MAIN PCB CIRCUIT DIAGRAM, HL-6050 (3/6) A-3
4. MAIN PCB CIRCUIT DIAGRAM, HL-6050 (4/6) A-4
5. MAIN PCB CIRCUIT DIAGRAM, HL-6050 (5/6) A-5
6. MAIN PCB CIRCUIT DIAGRAM, HL-6050 (6/6) A-6
7. BLOCK DIAGRAM, HL-6050 ..... A-7

8. LOW-VOLTAGE POWER SUPPLY PCB CIRCUIT DIAGRAM (100V), HL-6050 .... A-8
9. LOW-VOLTAGE POWER SUPPLY PCB CIRCUIT DIAGRAM (200V), HL-6050 .... A-9
10. HIGH-VOLTAGE POWER SUPPLY PCB CIRCUIT DIAGRAM, HL-6050 ..... A-10
11. ENGINE PCB CIRCUIT DIAGRAM, HL-6050 (1/2) A-11
12. ENGINE PCB CIRCUIT DIAGRAM, HL-6050 (2/2) A-12
13. SETUP BY COUNTRY (PJL FILE) A-13
14. HOW TO CALCULATE THE DRUM UNIT LIFE A-14

REGULATION

LASER SAFETY (110 - 120V MODEL ONLY)

This printer is certified as a Class I laser product under the US Department of Health and Human Services (DHHS) Radiation Performance Standard according to the Radiation Control for Health and Safety Act of 1968. This means that the printer does not produce hazardous laser radiation.

Since radiation emitted inside the printer is completely confined within the protective housing and external covers. the laser beam cannot escape form the machine during any phase of user operation.

FDA REGULATIONS (110 - 120V MODEL ONLY)

The US Food and Drug Administration (FDA) has implemented regulations for laser products manufactured on and after August 2, 1976. Compliance is mandatory for products marketed in the United States. One of the following labels on the back of the printer indicates compliance with the FDA regulations and must be attached to laser products marketed in the United States.

The label for Japanese manufactured products

MANUFACTURED: BROTHER INDUSTRIES, LTD. 15-1, Naeshiro-cho, Mizuho-ku, Nagoya 467-8561, Japan. This product complies with FDA radiation performance standards, 21 CFR Subchapter J.	K

The label for Chinese manufactured products

MANUFACTURED: BROTHER Corporation (Asia) Ltd. Shenzen Buji Nan Ling Factory Gold Garden Ind., Nan Ling Village, Buji, Rong Gang, Shenzen, CHINA This product complies with FDA radiation performance standards, 21 CFR Subchapter J.	C

Caution

Use of controls, adjustments or performance of procedures other than those specified in this manual may result in hazardous radiation exposure.

IEC 825 (220-240V MODEL ONLY)

This printer is a Class I laser product as defined in IEC 825 specifications. The label shown below is attached in countries where required.

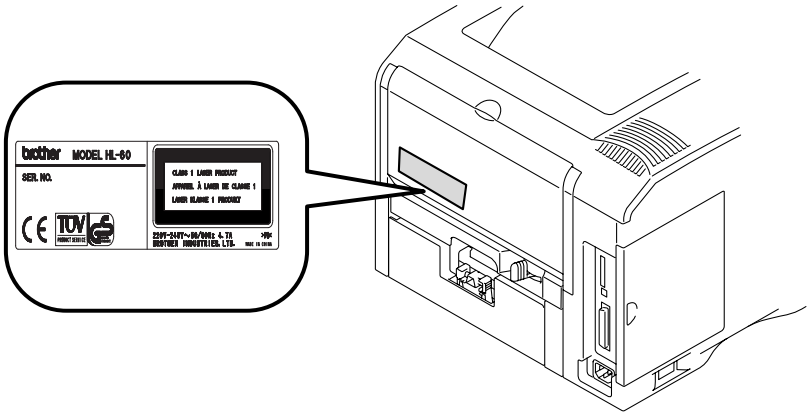

This printer has a laser diode which emits invisible laser radiation in the Laser Unit. The Laser Unit should not be opened without disconnecting the two connectors connected with the AC power supply and laser unit. Since the variable resistor in the laser unit is adjusted in accordance with the standards, never touch it.

Caution

Use of controls, adjustments or performance of procedures other than those specified in this manual may result in hazardous radiation exposure.

For Finland and Sweden

LUOKAN 1 LASERLAITE

KLASS 1 LASER APPARAT

Varoitus! Laitteen käyttäminen muulla kuin tässä käyttöohjeessa mainitulla tavalla saattaa altistaa käyttäjän turvallisuusluokan 1 ylittävälle näkymättömälle lasersäteilylle.

Varning – Om apparaten används på annat sätt än i denna Bruksanvisning specificerats, kan användaren utsättas för osynlig laserstrålning, som överskrider gränsen för laserklass 1.

SAFETY INFORMATION

CAUTION FOR LASER PRODUCT (WARNHINWEIS FUR LASER DRUCKER)

CAUTION: When the machine during servicing is operated with the cover open, the regulations of VBG 93 and the performance instructions for VBG 93 are valid.

CAUTION: In case of any trouble with the laser unit, replace the laser unit itself. To prevent direct exposure to the laser beam, do not try to open the enclosure of the laser unit.

ACHTUNG: Im Falle von Störungen der Lasereinheit muß diese ersetzt werden. Das Gehäuse der Lasereinheit darf nicht geöffnet werden, da sonst Laserstrahlen austreten können.

<Location of the laser beam window>

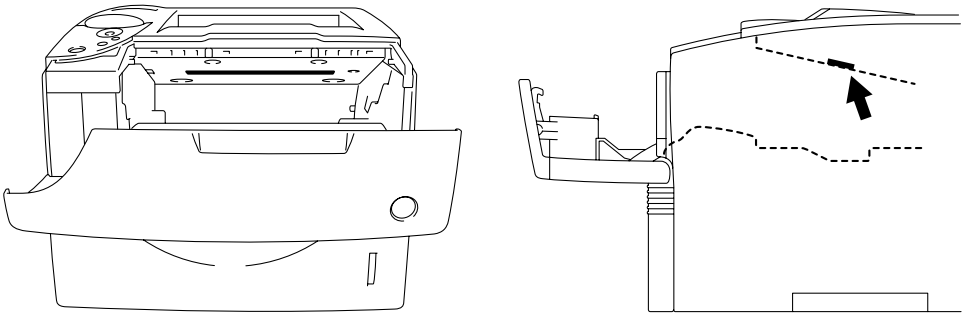

ADDITIONAL INFORMATION

When servicing the optical system of the printer, be careful not to place a screwdriver or other reflective object in the path of the laser beam. Be sure to take off any personal accessories such as watches and rings before working on the printer. A reflected beam, though invisible, can permanently damage the eyes.

Since the beam is invisible, the following caution label is attached on the laser unit.

DEFINITIONS OF WARNINGS, CAUTIONS AND NOTES

The following conventions are used in this service manual:

WARNING

Indicates warnings that must be observed to prevent possible personal injury.

CAUTION:

Indicates cautions that must be observed to service the printer properly or prevent damage to the printer.

NOTE:

Indicates notes and useful tips to remember when servicing the printer.

**Listed below are the various kinds of “WARNING” messages included in this manual.

WARNING

Always turn off the power switch and unplug the power cord from the power outlet before accessing any parts inside the printer.

WARNING

Some parts inside the printer are extremely hot immediately after the printer is used. When opening the front cover or rear cover to access any parts inside the printer, never touch the shaded parts shown in the following figures.

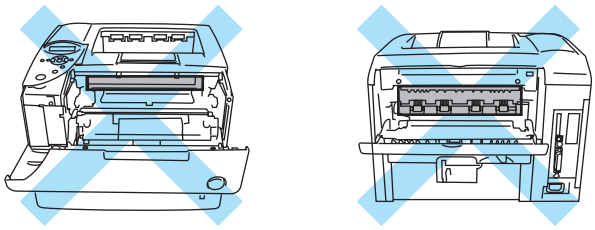

WARNING

If you analyze malfunctions with the power plug inserted into the power outlet, special caution should be exercised even if the power switch is OFF because it is a single pole switch.

CHAPTER 1 GENERAL

1. FEATURES

This printer has the following features;

High Resolution and Fast Print Speed

True 1200 X 1200 dots per inch (dpi), 600 x 600 dots per inch (dpi) and 300 x 300 dots per inch (dpi) for graphics with microfine toner and up to 24 pages per minute (ppm) print speed (when printing on A4 size paper), 25 pages per minute (ppm) print speed (when printing on Letter size paper) and 11 pages per minute (ppm) print speed (when printing using duplex unit).

Versatile Paper Handling

The printer loads paper automatically from the paper tray. The paper tray (standard/ optional lower tray) can hold A4, letter, B5 (ISO), A5, A6, B6 (ISO), A6, Executive and Legal sizes of paper. A4, letter and legal sizes of paper can be held when automatic duplex print. You can use a variety of types and sizes of paper when printing from multi-purpose tray. (Width: 69.8 to 220 mm (2.75 to 8.66 in.), Length: 116 to 406.4 mm (4.57 to 16 in.)

Front Operation

Basic operation of the printer can be controlled from the control panel.

Enhanced Printing Performance and User-Friendly Operation for Windows®

The dedicated printer driver for Microsoft® Windows® 95/98/Me, Windows® NT 4.0 and Windows® 2000/XP are available on the CD-ROM supplied with your printer. You can easily install them into your Windows® system using our installer program. The driver supports our unique compression mode to enhance printing speed in Windows® applications and allows you to choose various printer settings including toner save mode, custom paper size, sleep mode, gray scale adjustment, resolution, water mark and many layout functions. You can easily setup these print options through the Printer Setup Menu.

Printer Status Monitor with Bi-directional Parallel Interface

The printer driver can monitor the status of your printer using bi-directional parallel communications. IEEE-1284 bi-directional parallel printer cable is recommended.

The printer status monitor program can show the current status of your printer. When printing, the animated dialog box appears on your computer screen to show the current printing process. If an error occurs, a dialog box will appear to let you know what to correct. If you have turned on the interactive Help (Windows® 95/98 only) you can get visual guidance on your PC screen on the actions in the event of certain printer errors.

Quick Print Setup

The Quick Print Setup is a convenient utility to allow you to make changes to frequently used driver settings easily without having to open the printer properties selection box every time. It is launched automatically when this printer driver is selected. You can change the settings by clicking on the icon with the right mouse button.

Enhanced Memory Management

The printer provides its own data compression technology in its printer hardware and the supplied printer driver software, which can automatically compress graphic data and font data efficiently into the printer's memory. You can avoid memory errors and print most full-page 1200 dpi graphic and text data, including large fonts, with the standard printer memory.

USB Interface (for Windows® 98/Me/2000/XP, iMac and Power Macintosh)

The printer can be connected using the Universal Serial Bus (USB) interface to a PC or Macintosh, which has a USB interface. Drivers that allow you to use the USB port are provided on the CD-ROM supplied with the printer.

Popular Printer Emulation Support

These printers support the following printer emulation modes;
HP LaserJet (PCL6), PostScript® Level 3 language emulation (Brother BR-Script Level 3), Epson FX-850 and IBM Proprinter XL.
When you use DOS application software or Windows® version 3.0 or earlier, you can use any of these emulations to operate the HL-6050/6050D/6050DN printers. The printers also support auto-emulation switching between HP, Brother BR-Script 3 and Epson or HP, BR-Script 3 and IBM. If you want to set the printer emulation, you can do it using the Remote Printer Console Program.

High Resolution Control

High Resolution Control (HRC) technology provides clear and crisp printouts. Use this function to get smooth text print quality.

Environment-Friendly

<Economy Printing Mode>
This feature will cut your printing cost by saving toner. It is useful for obtaining draft copies for proof-reading.

<Sleep Mode (Power Save Mode)>
Sleep mode automatically reduces power consumption when the printer is not in use for a certain period of time. The printer consumes less than 10W (HL-6050DN) / 8W (HL-6050 and HL-6050D) when in sleep mode.

<Low Running Cost>

Since the toner cartridge is separate from the drum unit, you need to replace only the toner cartridge after printing around 7,500 pages at 5% coverage for A4 paper for the standard cartridge, which is both cost effective and ecologically friendly.

Bar Code Print

The printer can print the following 11 types of bar codes;

- Code 39
- Code 128
- Interleaved 2 of 5
- Codabar
- US-PostNet
- ISBN
- UPC-A
- UPC-E
- EAN-8
- EAN-13
- EAN-128

Network Feature (for HL-6050DN only)

The Brother printer has built in multi protocol network capability as standard. This allows multiple host computers to share the printer on a 10/100Mbit Ethernet network. Any users can print their jobs as if the printer was directly connected to their computer. Users on Windows® 95/98/Me, Windows® NT, Windows® 2000/XP, UNIX, Novell, Apple Macintosh, LAN server and OS/2 Warp server computer simultaneously can access this printer. For further information, see the Network User's Guide supplied with the printer.

2. OVERVIEW

<Front View>

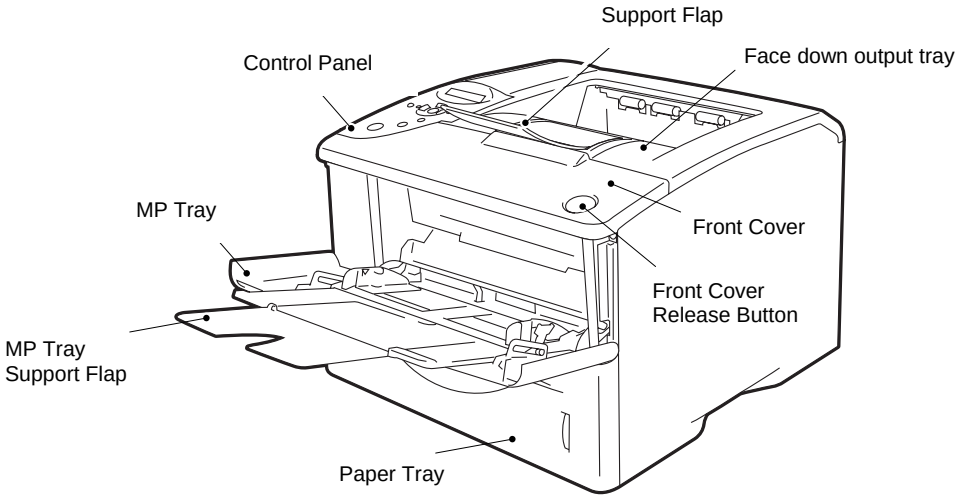

Fig. 1-1

<Rear View>

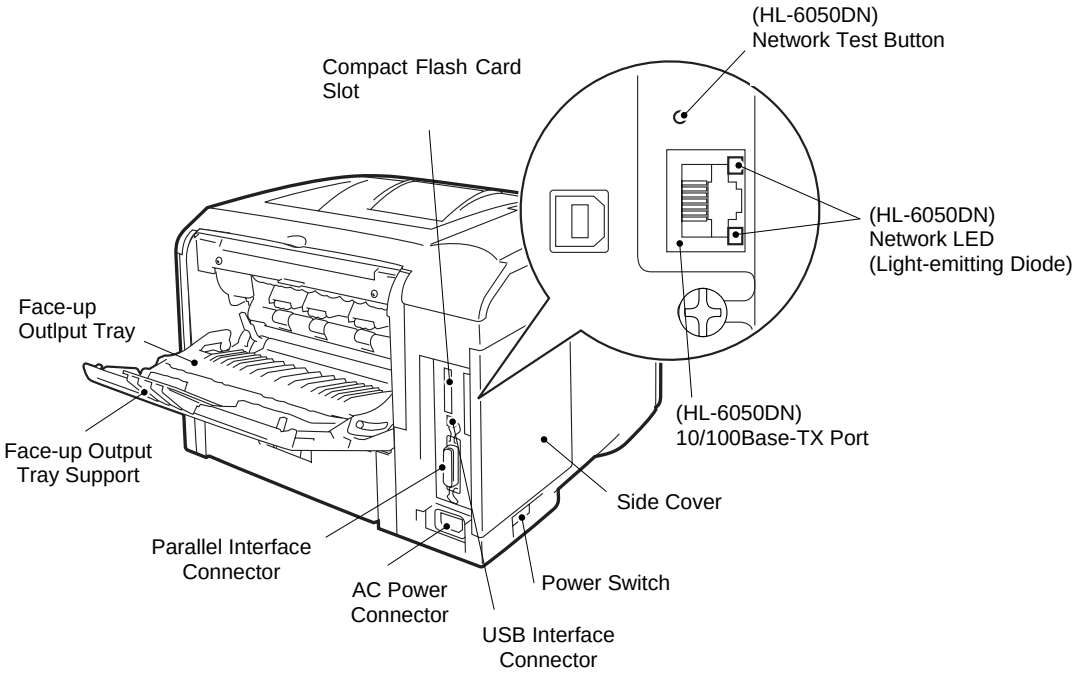

*The printer illustration is based on HL-6050DN.

Fig. 1-2

3. SPECIFICATIONS

3.1 Printing

Print method	Electrophotography by semiconductor laser-beam scanning
Laser	Wavelength: 780 nm Pulse duration 20 ns Output: 10mW max
Resolution	1200dpi (for Windows® 95/98/Me, WindowsNT® 4.0, Windows® 2000/XP, and Mac OS, Linux) 600 dpi (for Windows® 95/98/Me, WindowsNT® 4.0, Windows® 2000/XP, DOS and Mac OS, Linux) 300 dpi (for Windows® 95/98/Me, WindowsNT® 4.0, Windows® 2000/XP, and Mac OS, Linux)
Print quality	Normal printing mode Economy printing mode (Toner save mode)
Print speed	Normal: Up to 24 pages/minute (A4) UP to 25 pages/minute (Letter-size paper) (when loading A4 or Letter-size paper from the standard paper tray.) Duplex printing: Up to 11 pages/minute* (when printing from duplex unit.)
Warm-up	Max. 20 seconds at 23°C (73.4°F)
First print	Max. 11 seconds (A4 or letter size using face-down printing from tray)
Consumables	<Toner cartridge> Life expectancy: 7,500 pages / cartridge * when printing A4 or Letter-size paper at 5% print coverage. Shelf life: 2 years (6 months after opening) <Drum unit> Life expectancy: 30,000 pages / drum unit (1 page/ job) * when printing A4 or Letter-size paper at 5% print coverage. Shelf life: 2 years The shelf life is guaranteed under the normal condition as below; (Temperature) Normal condition: 0 to 40°C *Storage condition at the temperature of 40 to 50°C: Up to 5 days *Storage condition at the temperature of –20 to 0°C: Up to 5 days (Humidity) Normal condition: 35 to 85% *Storage condition at the humidity of 85 to 95%: Up to 5 days *Storage condition at the humidity of 10 to 35%: Up to 5 days

**NOTE:*

Print speed varies depending on the paper size or media type. For details, refer to 3.7 'PRINT SPEEDS WITH VARIOUS SETTINGS'.

3.2 Functions

CPU	Fujitsu SPARClite 200MHz
Emulation	Brother Printing Solution for Windows® Automatic emulation selection among HP LaserJet (PCL level 6), Brother BR-Script Level 3, EPSON FX-850 or IBM Proprinter XL
Printer driver	<PCL Driver> Windows® 95/98/Me, Windows® NT 4.0, Windows® 2000/XP driver, supporting Brother Native Compression mode <PS Driver> PPD file driver for Windows® 95/98/Me, Windows NT® 4.0, Windows® 2000/XP driver and Macintosh driver <Others> iMac, Power Macintosh with USB printer driver Optional Macintosh driver available for System 6.0.7 or higher
Interface	IEEE 1284 Parallel Hi-Speed USB 2.0 10/100 BaseTX Ethernet network interface (HL-6050DN)
Memory	32 Mbytes Expandable up to 160 Mbytes by installing an industry standard DIMM*
Control Panel	Display LCD: 1 line, 16 digits, 3 colors LED: 1 LED Buttons : 7 buttons: Go, Job Cancel, Reprint, Set, Back and 2 scroll buttons
Diagnostics	Self-diagnostic program
Storage device	CompactFlash Card

**NOTE:*

The DIMM must have the following specifications;

Type:	*100 pin*
Access time:	*60 nsec - 80 nsec*
Capacity:	*16, 32, 64, 128 Mbyte*
Height:	*35.0 mm (1.38 inches) or less*
Output:	*32 bit or 36 bit (independent of parity)*

3.3 Electrical and Mechanical

Power source	U.S.A. and Canada:	AC 100 to 120V, 50 Hz/60 Hz
	Europe and Australia:	AC 220 to 240V, 50 Hz/60 Hz
Power consumption	Printing (average):	600 W or less at 25°C (77°F)
	Standing by:	90 W or less at 25°C (77°F)
	Sleep*:	10 W or less (For HL-6050DN), 8 W or less (For HL-6050 and HL-6050D)
	OFF	2 W or less (The only way to achieve 0 W power consumption is to unplug the power cord from the AC outlet/ socket.)
Sound power level	Printing:	LWAd = 6.4 Bell (A)
	Standby	LWAd = 4.9 Bell (A)
Temperature	Operating:	10 to 32.5°C (50 to 90.5°F)
	Storage:	0 to 35°C (32 to 95°F)
Humidity	Operating:	20 to 80% (without condensation)
	Storage:	10 to 80% (without condensation)
Dimensions (W x D x H)	392 x 425 x 310 mm (15.4 x 16.7 x 12.2 inches)	
Weight	Approx. 20.8 kg (45.8 lb.) including Drum Unit and Toner Cartridge.	

**NOTE:*

- *The power consumption figure quoted for sleep mode is when the fan has stopped.*

3.4 Network (NC-6100H)

Type / Speed	10/100 Base TX Ethernet Automatic negotiation
Protocols	TCP/IP (ARP, RARP, BOOTP, DHCP, APIPA [Auto IP], WINS/NetBIOS, DNS, LPR/LPD, Raw Port/Port9100, POP3/SMTP, SMB Print, IPP, FTP, Simple Network Configuration Capabilities of Apple® Mac OS® X, SSDP, TELNET, SNMP, HTTP, TFTP), Netware IPX/SPX, Appletalk, DLC/LLC, NetBEUI
Management	• BRAdmin Professional • Web BRAdmin • Web Based Management
Firmware update	Flash ROM based for Network module • Can be upgraded using TFTP • Can be upgraded using IPX/SPX • Easy upgrade using Brother BRAdmin utility
Supplied software	• BRAdmin Professional management utility (for Windows® 95/98/Me Windows®NT 4.0/Windows® 2000/XP) • Port driver for Windows® 95/98/Me, Windows®NT 4.0/Windows® 2000/XP LPR port driver (for Windows® 95/98/Me, Windows®NT 4.0 only) NetBIOS port driver SMTP port driver

3.5 Paper

3.5.1 Feedable paper

(1) Paper type

Paper type	Paper tray (standard)	Multi-purpose tray	Optional lower tray	Automatic Duplex printing	Select the paper type from the printer driver
Plain paper 60 g/m^2 to 105 g/m^2 (16 to 28 lb)	O	O	O	O	Plain paper
Recycled paper (16 to 28 lb)	O	O	O	O	Recycled paper
Bond paper Rough paper – 60 g/m^2 to 161 g/m^2 (16 to 43 lb)	O (16 to 28 lb)	O (16 to 43 lb)	O (16 to 28 lb)		Bond paper
Thick paper 105 g/m^2 to 161 g/m^2 (28 to 43 lb)		O			Thick paper or Thicker paper
Transparency	O Up to 10 sheets A4 or Letter	O Up to 10 sheets A4 or Letter	O Up to 10 sheets A4 or Letter		Transparencies
Label		O Only A4 or Letter size			Thicker paper
Envelope		O			Envelopes Envelopes - Thin
Card		O			Thick paper or Thicker paper
Thin paper 60 g/m^2 or less (16 lb or less)	O	O	O		Thin paper

(2) Paper size

	Paper Tray (Standard)	Multi-purpose tray	Optional lower tray	Automatic Duplex printing
Paper size	A4, Letter, Legal, B5 (ISO), A5, B6 (ISO), A6, Executive, Folio	Width: 69.9 to 215.9 mm (2.75 to 8.5 in.) Length: 116 to 406.4 mm (4.57 to 16 in.)	A4, Letter, Legal, B5 (ISO), A5, B6 (ISO), Executive, Folio	A4, Letter, Legal

(3) Other paper specifications

<Paper tray>

	Cut sheet
Basis weight	60 to 105 g/m^2 (16 to 28 lb.)
Caliper	0.08 to 0.13 mm (0.003 to 0.005 in.)
Moisture content	4% to 6% by weight

<Multi-purpose tray>

	Cut sheet	Envelope
Basis weight	60 to 161 g/m^2 (16 to 43 lb.)	75 to 90 g/m^2 (20 to 24 lb.) single thickness
Caliper	0.08 to 0.2 mm (0.003 to 0.008 in.)	0.084 to 0.14 mm (0.003 to 0.005 in.) single thickness
Moisture content	4% to 6% by weight	4% to 6% by weight

(4) Recommended paper

	Europe	USA
Plain paper	Xerox Premier 80 g/m^2	Xerox 4200DP 20 lb
Recycled paper	Xerox Recycled Supreme 80 g/m^2	
Transparency	3M CG3300	3M CG 3300
Label	Avery laser label L7163	Avery laser label #5160

CAUTION:

When you are choosing print media, be sure to follow the information given below to prevent any paper jams, print quality problems or printer damage;

- *It is recommended to use long-grained paper for the best print quality. If short-grained paper is being used, it might be the cause of paper jams.*
- *Use neutral paper. Do not use acid paper to avoid any damage to the drum unit.*
- *Avoid using coated paper such as vinyl coated paper.*
- *Avoid using preprinted or highly textured paper.*

- *It is recommended to use labels or transparencies which are designed for use in laser printers.*
- *Avoid feeding labels with the carrier sheet exposed, or the printer will be damaged.*
- *Before loading paper with holes such as organizer sheets, be sure to fan the stack well.*
- *Do not use organizer sheets that are stuck together. The glue that is used might caused damaged to the printer.*
- *When printing on the back of pre-printed paper, if the paper is curled, be sure to straighten the paper as much as possible.*
- *Different types of paper should not be loaded at the same time in the paper tray to avoid any paper jams or misfeeds.*

3.5.2 Paper tray capacity

	Paper Tray (Standard)	**Multi-purpose tray**	**Optional lower tray**
Paper Capacity	500 sheets (80 g/m^2 or 20 lb)	100 sheets (80 g/m^2 or 20 lb)	500 sheets (80 g/m^2 or 20 lb)

3.5.3 Print delivery

(1) Face down output tray
capacity: Maximum 250 sheets (80 g/m^2)
face down only

(2) Face up output tray
capacity: Maximum 50 sheets (80 g/m^2)
face up only

NOTE:
Face-down: Delivery with the printed face of the paper downwards.
Face-up: Delivery with the printed face of the paper upwards.

(3) You must use the face-up output tray for certain print media. We recommend that you use face-up printing when you print on transparencies.

Media type	**Paper output**	
	Face down	**Face up**
Plain paper	O	O
Recycled paper	O	O
Bond paper	O	O
Thick paper	O	O
Transparency	O	O
Labels		O
Envelope		O
Card stock		O
Thin paper	O	O

3.6 Printable Area

3.6.1 PCL5e/EPSON/IBM emulation

When using PCL emulation, the edges of the paper that cannot be printed on are shown below.

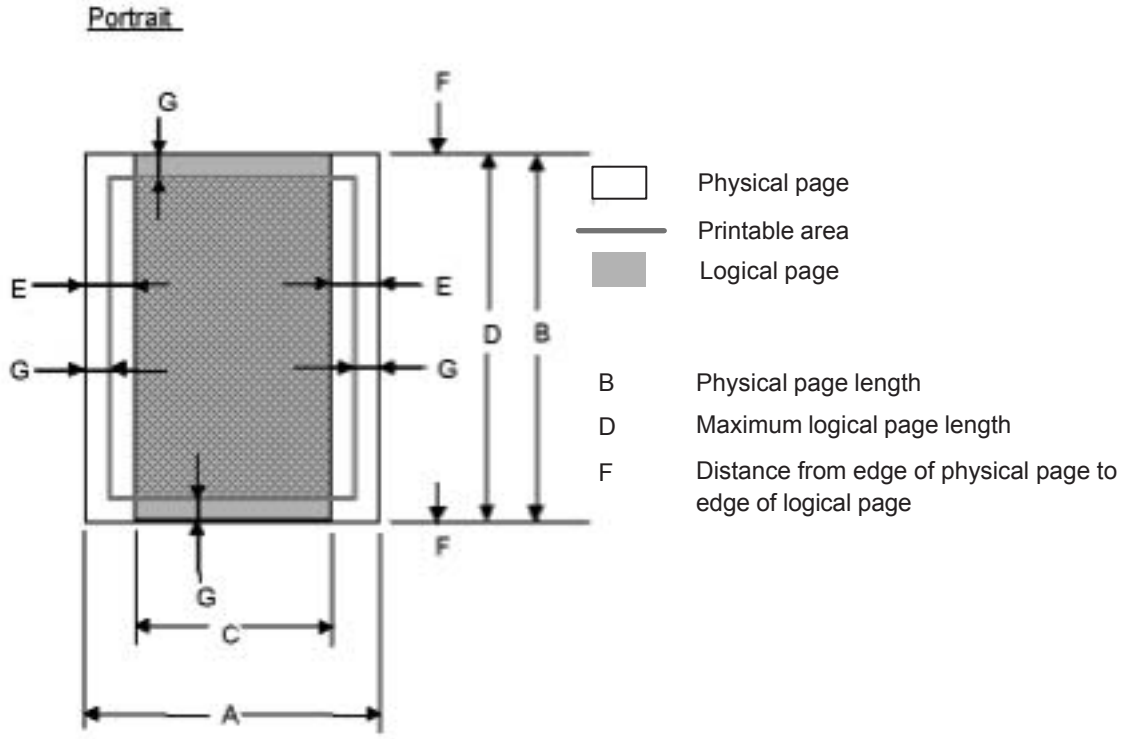

NOTE:

"Logical page" shows the printable area for a PCL driver.

"Printable area" shows mechanical printable area of the machine.

Therefore, the machine can only print within the shaded area when you use a PCL driver.

The table below shows the printable areas when printing on Portrait for each paper size.

Size	A	B	C	D	E	F	G
Letter	215.9 mm 8.5” (2,550 dots)	279.4 mm 11.0” (3,300 dots)	203.2 mm 8.0” (2,400 dots)	279.4 mm 11.0” (3,300 dots)	6.35 mm 0.25” (75 dots)	0 mm	4.2 mm 0.16” (50 dots)
Legal	215.9 mm 8.5” (2,550 dots)	355.6 mm 14.0” (4,200 dots)	203.2 mm 8.0” (2,400 dots)	355.6 mm 14.0” (4,200 dots)	↑	0 mm	4.2 mm 0.16” (50 dots)
Folio	215.9 mm 8.5” (2,550 dots)	330.2mm 13.0” (3,900 dots)	203.2 mm 8.0” (2,400 dots)	330.2mm 13.0” (3,900 dots)	↑	0 mm	4.2 mm 0.16” (50 dots)
Executive	184.15 mm 7.25” (2,175 dots)	266.7 mm 10.5” (3,150 dots)	175.7 mm 6.92” (2,025 dots)	266.7 mm 10.5” (3,150 dots)	6.35 mm 0.25” (75 dots)	0 mm	4.2 mm 0.16” (50 dots)
A 4	210.0 mm 8.27” (2,480 dots)	297.0 mm 11.69” (3,507 dots)	198.0 mm 7.79” (2,338 dots)	297.0 mm 11.69” (3,507 dots)	6.01 mm 0.24” (71 dots)	0 mm	4.2 mm 0.16” (50 dots)
A 5	148.5 mm 5.85” (1,754 dots)	210.0 mm 8.27” (2,480 dots)	136.5 mm 5.37” (1,612 dots)	210.0 mm 8.27” (2,480 dots)	↑	0 mm	4.2 mm 0.16” (50 dots)
A 6	105.0 mm 4.13” (1,240 dots)	148.5 mm 5.85” (1,754 dots)	93.0 mm 3.66” (1,098 dots)	148.5 mm 5.85” (1,754 dots)	↑	0 mm	4.2 mm 0.16” (50 dots)
B 5 (JIS)	182.0 mm 7.1” (2,130 dots)	257.0 mm 10.11” (3,033 dots)	170.0 mm 6.69” (2,007 dots)	257.0 mm 10.11” (3,033 dots)	↑	0 mm	4.2 mm 0.16” (50 dots)
B 5 (ISO)	176.0 mm 6.93” (2,078 dots)	250.0 mm 9.84” (2,952 dots)	164.0 mm 6.46” (1,936 dots)	250.0 mm 9.84” (2,952 dots)	↑	0 mm	4.2 mm 0.16” (50 dots)
B 6	125.0 mm 4.92” (1,476 dots)	176.0 mm 6.93” (2,078 dots)	164.0 mm 4.44” (1,334 dots)	176.0 mm 6.93” (2.078 dots)	↑	0 mm	4.2 mm 0.16” (50 dots)
COM10	104.78 mm 4.125” (1,237 dots)	241.3 mm 9.5” (2,850 dots)	92.11 mm 3.63” (1,087 dots)	241.3 mm 9.5” (2,850 dots)	6.35 mm 0.25” (75 dots)	0 mm	4.2 mm 0.16” (50 dots)
MONARCH	98.43 mm 3.875” (1,162 dots)	190.5 mm 7.5” (2,250 dots)	85.7 mm 3.37” (1,012 dots)	190.5 mm 7.5” (2,250 dots)	↑	0 mm	4.2 mm 0.16” (50 dots)
C 5	162.0 mm 6.38” (1,913 dots)	229.0 mm 9.01” (2,704 dots)	150.0 mm 5.9” (1,771 dots)	229.0 mm 9.01” (2,704 dots)	6.01 mm 0.24” (71 dots)	0 mm	4.2 mm 0.16” (50 dots)
DL	110.0 mm 4.33” (1,299 dots)	220.0 mm 8.66” (2,598 dots)	98.0 mm 3.86” (1,157 dots)	220.0 mm 8.66” (2,598 dots)	↑	0 mm	4.2 mm 0.16” (50 dots)
DL L	220.0 mm 8.66” (2,598 dots)	110.0 mm 4.33” (1.299 dots)	207.4 mm 8.17” (2,450 dots)	110.0 mm 4.33” (1.299 dots)	6.27 mm 0.25” (74 dots)	0 mm	6.27 mm 0.25” (74 dots)

NOTE:

- *The paper sizes indicated here should confirm to the nominal dimensions specified by JIS except B5 (ISO).*
- *The dot size is based on 300 dpi resolution.*

Landscape

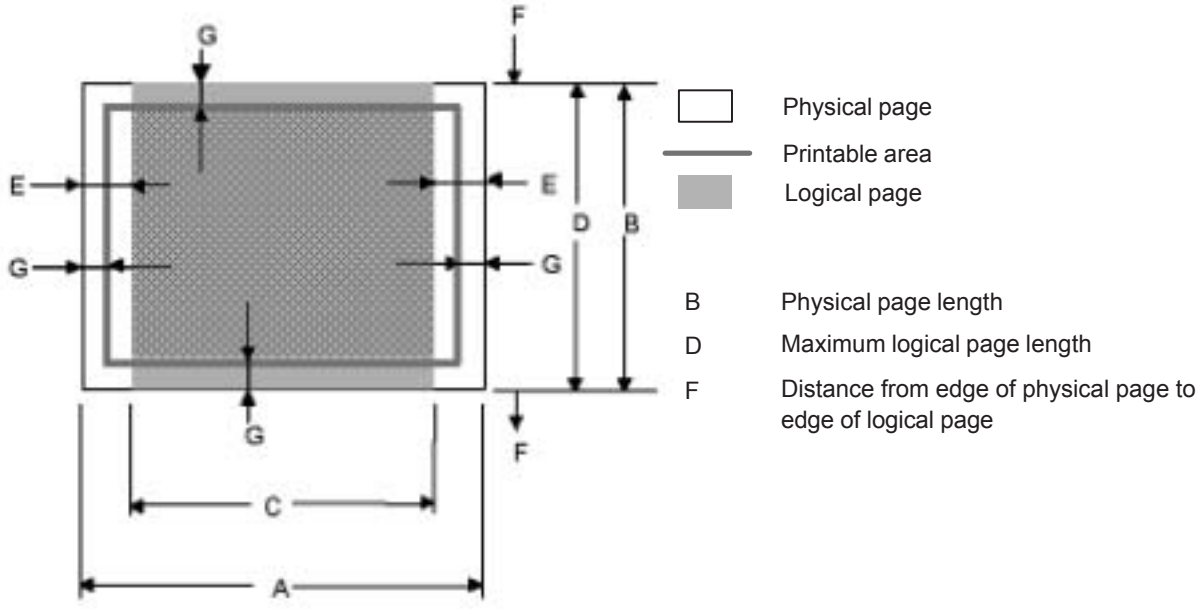

NOTE:

"Logical page" shows the printable area for a PCL driver.

"Printable area" shows mechanical printable area of the machine.

Therefore, the machine can only print within the shaded area when you use a PCL driver.

The table below shows the printable areas when printing on Landscape for each paper size.

Size	A	B	C	D	E	F	G
Letter	279.4 mm 11.0” (3,300 dots)	215.9 mm 8.5” (2,550 dots)	269.3 mm 10.6” (3,180 dots)	215.9 mm 8.5” (2,550 dots)	5.0 mm 0.2” (60 dots)	0 mm	4.2 mm 0.16” (50 dots)
Legal	355.6 mm 14.0” (4,200 dots)	215.9 mm 8.5” (2,550 dots)	345.5 mm 13.6” (4,080 dots)	215.9 mm 8.5” (2,550 dots)	↑	0 mm	4.2 mm 0.16” (50 dots)
Folio	330.2mm 13.0” (3,900 dots)	215.9 mm 8.5” (2,550 dots)	320.0mm 12.6” (3,780 dots)	215.9 mm 8.5” (2,550 dots)	↑	0 mm	4.2 mm 0.16” (50 dots)
Executive	266.7 mm 10.5” (3,150 dots)	184.15 mm 7.25” (2,175 dots)	256.6 mm 10.1” (3,030 dots)	184.15 mm 7.25” (2,175 dots)	5.0 mm 0.2” (60 dots)	0 mm	4.2 mm 0.16” (50 dots)
A 4	297.0 mm 11.69” (3,507 dots)	210.0 mm 8.27” (2,480 dots)	287.0 mm 11.2” (3,389 dots)	210.0 mm 8.27” (2,480 dots)	4.8 mm 0.19” (59 dots)	0 mm	4.2 mm 0.16” (50 dots)
A 5	210.0 mm 8.27” (2,480 dots)	148.5 mm 5.85” (1,754 dots)	200.0mm 7.87” (2,362 dots)	148.5 mm 5.85” (1,754 dots)	↑	0 mm	4.2 mm 0.16” (50 dots)
A 6	148.5 mm 5.85” (1,754 dots)	105.0 mm 4.13” (1,240 dots)	138.5 mm 5.45” (1,636 dots)	105.0 mm 4.13” (1,240 dots)	↑	0 mm	4.2 mm 0.16” (50 dots)
B 5 (JIS)	257.0 mm 10.11” (3,033 dots)	182.0 mm 7.1” (2,130 dots)	247.0 mm 9.72” (2,916 dots)	182.0 mm 7.1” (2,130 dots)	↑	0 mm	4.2 mm 0.16” (50 dots)
B 5 (ISO)	250.0 mm 9.84” (2,952 dots)	176.0 mm 6.93” (2,078 dots)	240.0 mm 9.44” (2,834 dots)	176.0 mm 6.93” (2,078 dots)	↑	0 mm	4.2 mm 0.16” (50 dots)
B 6	176.0 mm 6.93” (2,078 dots)	125.0 mm 4.92” (1,476 dots)	166.4 mm 6.55” (1,960 dots)	125.0 mm 4.92” (1,476 dots)	↑	0 mm	4.2 mm 0.16” (50 dots)
COM10	241.3 mm 9.5” (2,850 dots)	104.78 mm 4.125” (1,237 dots)	231.1 mm 9.1” (2,730 dots)	104.78 mm 4.125” (1,237 dots)	5.0 mm 0.2” (60 dots)	0 mm	4.2 mm 0.16” (50 dots)
MONARCH	190.5 mm 7.5” (2,250 dots)	98.43 mm 3.875” (1,162 dots)	180.4 mm 7.1” (2,130 dots)	98.43 mm 3.875” (1,162 dots)	↑	0 mm	4.2 mm 0.16” (50 dots)
C 5	229 mm 9.01” (2,704 dots)	162 mm 6.38” (1,913 dots)	219.0 mm 8.62” (2,586 dots)	162 mm 6.38” (1,913 dots)	4.8 mm 0.19” (59 dots)	0 mm	4.2 mm 0.16” (50 dots)
DL	220 mm 8.66” (2,598 dots)	110 mm 4.33” (1,299 dots)	210.0 mm 8.26” (2,480 dots)	110 mm 4.33” (1,299 dots)	↑	0 mm	4.2 mm 0.16” (50 dots)
DL L	110 mm 4.33” (1,299 dots)	220 mm 8.66” (2,598 dots)	97.5 mm 3.84” (1,151 dots)	220 mm 8.66” (2,598 dots)	6.27 mm 0.25” (74 dots)	0 mm	6.27 mm 0.25” (74 dots)

NOTE:

- *The paper sizes indicated here should confirm to the nominal dimensions specified by JIS except B5 (ISO).*
- *The dot size is based on 300 dpi resolution.*

3.6.2 PCL6/BR-Script3 emulation

You can not print within 4.2 mm (50dots in 300 dpi mode) on all four sides of the paper.

3.7 Print Speeds with Various Settings

Print speed of the HL-6050/6050D/6050DN printers is up to 24/25 ppm when loading A4 or Letter size paper from the paper tray in the plain paper mode.

Actual print speed varies depending on the media type or paper size as shown in the tables below;

<A4 / Letter size>

Media type setting	All models
Transparency	Up to 24/25 ppm
Thin Paper	Up to 24/25 ppm
Plain paper, Env.Thin	Up to 24/25 ppm (Plain) Up to 10 ppm (Env.)
Thick Paper, Envelopes	Up to 24/25 ppm (Thick)
Thicker Paper	Up to 20 ppm *
Bond Paper	Up to 24 ppm*
Env./Env.Thin	Up to 6 ppm*

<Smaller size than A4 or Letter>

Media type setting	All models
Thin Paper	Up to 24/25 ppm
Plain paper	Up to 24/25 ppm
Thick Paper	12 ppm after 50 sec. have passed.
Thicker Paper	Up to 20 ppm 12 ppm after 50 sec. have passed.
Bond Paper	Up to 12 ppm *
Env./Env.Thin	Up to 6 ppm*

**The print speed may vary according to conditions, such as paper size and paper tray.*

NOTE:

- *When a smaller size paper than A4 or Letter is printed, the temperature on both edges of the fixing unit is much higher than the temperature on the center of the unit where the paper is fed depending on the setting or model. Therefore, the print speed is slowed in order to decrease the temperature on the edges after the specified time, it is maximum print speed when you first start printing.*
- *Max. speed is 24/25 ppm or more. It varies depending on the paper size.*

3.8 Toner Cartridge Weight Information

Toner Cartridge Weight (approx weight)

	TN4100/TN670
Brand new Toner Cartridge Weight	918g
Toner Weight at Brand New Toner Cartridge	222.5±2.5g
Toner Cartridge Weight at Toner Near Empty	785.5g
Remain Toner Weight at Toner Near Empty	90g
Toner Cartridge Weight at Toner Empty	775.5g
Remain Toner Weight at Toner Empty	80g
You can print 500 to 600 pages with 10g toner.	

*Without yellow protector
*Toner cartridge weight may vary within 2 to 3g depending on the cartridge weight.

Life expectancy: 7,500 pages / toner cartridge
(When printing A4 or Letter size paper at 5% print coverage)

4. SERIAL NO. DESCRIPTIONS

The descriptions below show how to understand the meanings of the numbers printed on the labels or bag of the printer and printer parts:

< ID for production month >

A:	January	B:	February	C:	March	D:	April
E:	May	F:	June	G:	July	H:	August
J:	September	K:	October	L:	November	M:	December

< ID for year >

3: 2003 4: 2004

< ID for factory >

9: Kariya Plant A: Mie Brother C: BIUK
J: Buji Nan Ling Factory

(1) Printer: Printed on the label attached on the rear of the main body

<Example>

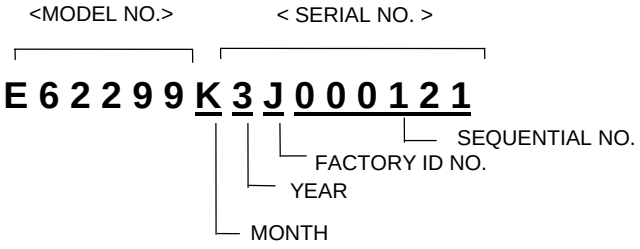

(2) Process unit: Imprinted on the aluminum bag

(Drum unit with toner cartridge)

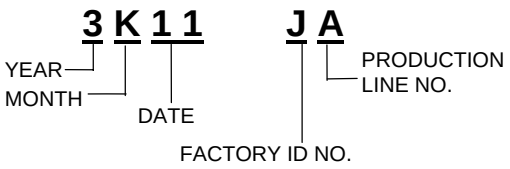

(3) Drum unit: Printed on the bar code label attached inside the drum unit

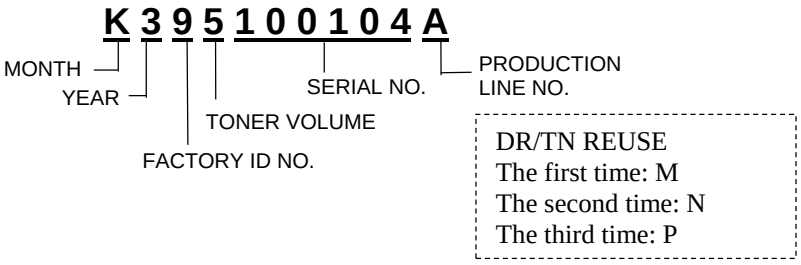

(4) Toner cartridge: Imprinted on the aluminum bag

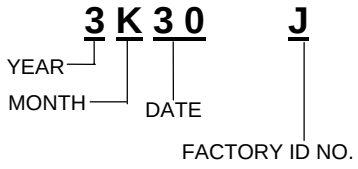

Printed on the bar code label attached on the toner cartridge

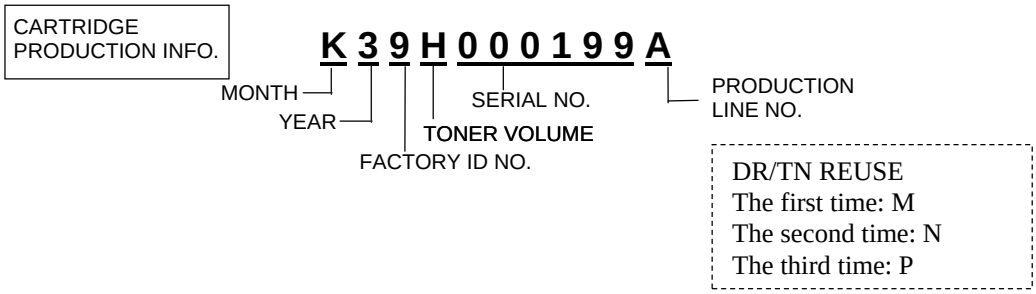

(5) Laser unit: On the laser unit

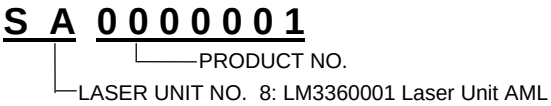

CHAPTER 2 INSTALLATION AND BASIC OPERATION

1. CONDITIONS REQUIRED FOR INSTALLATION

1.1 Power Supply

- The source voltage must stay within ±10% of the rated voltage shown on the rating plate.
- The power cord, including extensions, should not exceed 5 meters (16.5 feet).
- Do no share the same power circuit with other high-power appliances, particularly an air conditioner, copier or shredder. If it is unavoidable that you must use the printer with these appliances, it is recommended that you use an isolation transformer or a high-frequency noise filter.
- Use a voltage regulator if the power source is not stable.

1.2 Environment

- Make sure that the power outlet/socket is near the printer and is easy to get to so that, if there is an emergency, it can be easily unplugged.
- The room temperature is maintained between 10°C and 32.5°C. The relative humidity is maintained between 20% and 80%.
- To avoid ozone building up, put the printer in a large well-ventilated room.
- Place the printer on a flat, horizontal surface.
- Keep the printer clean. Do not put the printer in a dusty place.
- Do not put the printer where the ventilation hole of the printer is blocked. Keep a gap of approximately 100 mm (4 inches) between the ventilation hole and the wall.
- Do not put the printer in direct sunlight. If you have to put it near a window, use a blind or a heavy curtain to protect the printer from direct sunlight.
- Do not put the printer near devices that contain magnets or generate magnetic fields.
- Do not subject the printer to strong physical shocks or vibrations.
- Do not expose the printer to open/naked flames or salty or corrosive gasses.
- Do not put objects on top of the printer.
- Do not put the printer near an air conditioner.
- Keep the printer horizontal when you carry it.

1.3 System Requirements for Brother Printer Solution for Windows®

Check the following system requirements to setup and operate the printer using Brother Printing Solution for Windows®:

Computing System Operating System Version		Processor Speed	Minimum RAM	Recommended RAM	Available Hard Disk Space
Windows® Operating System	95, 98, 98SE	486/ 66MHz	8MB	16MB	40MB
	NT Workstation 4.0	Pentium 75MHz	16MB	32MB	50MB
	2000 Professional	Pentium 133MHz	64MB	128MB	50MB
	Me	Pentium 150MHz	32MB	64MB	50MB
	XP	Pentium 300MHz	128MB	128MB	50MB
Apple Macintosh Operating System	OS 8.6 to 9.2	All base models meet minimum system requirements	32MB	64MB	50MB
	OS X 10.1 to 10.2		128MB	160MB	

2. UNPACKING

When unpacking the printer, check to see that all of the following components are included in the carton.

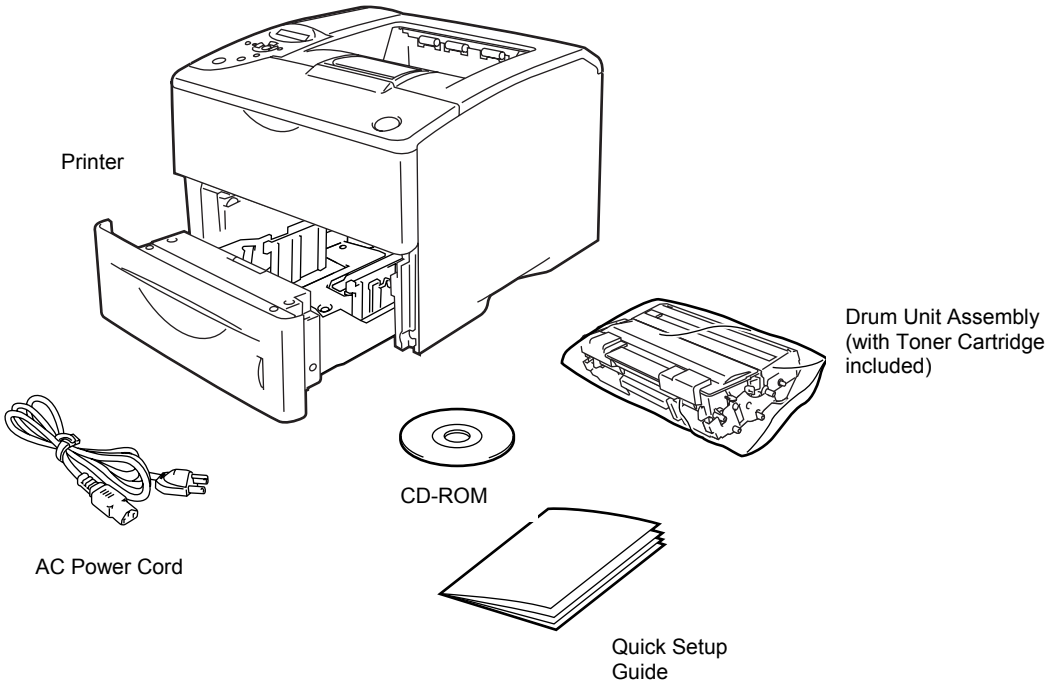

Fig. 2-1

NOTE:
The power cord may be slightly different than the one shown in the figure above, depending on which country the printer was bought in.

Interface cable

1) An interface cable is not a standard accessory.
2) Some computers have a USB and a parallel port. Please buy the appropriate cable for the interface you intend to use.
3) Most parallel cables support bi-directional communication, but some might have an incompatible pin assignment or may not be IEEE 1284-compliant.
4) It is recommended to use a parallel interface cable or USB interface cable that is no longer than 2 meters.
5) When you use a USB cable, make sure that you connect it to the USB connector of your PC.
6) Please make sure that you use a Hi-Speed USB 2.0 certified cable if your computer uses a Hi-Speed USB 2.0 interface.
7) Do not connect the USB cable to the front of your PC or to the Macintosh keyboard.

3. INSTALL THE PRINTER

You need to implement hardware setup and driver installation to use the printer.

Firstly, identify the Operating System on your computer. (Windows® 95/98/Me, Windows NT® 4.0, Windows® 2000/XP and Macintosh)Then, purchase the appropriate interface cable (Parallel, USB or Network) for your computer. Most existing parallel cables support bi-directional communication, but some might have an incompatible pin assignment or may not be IEEE 1284-compliant.

The installation programs for the hardware setup and driver installation are contained on the supplied CD-ROM.

3.1 For All Users

For Windows® users

Turn on the PC power. Insert the supplied CD-ROM into the CD-ROM drive. The opening screen will appear automatically.

NOTE:

*1) If the opening screen does not appear; click **Start** and select **Run**. Then, enter the CD-drive letter and type \START.EXE (for example: D:\START.EXE).*
2) Do not connect the interface cable. Connecting the interface cable is done when installing the driver.

(1) Follow the on-screen instructions.
(2) Click **Initial Setup** on the menu screen.
(3) You can view the Initial Setup instructions.

For Macintosh users

NOTE:

Do not connect the interface cable. Connecting the interface cable is done when installing the driver.

(1) Turn on the Macintosh. Insert the CD-ROM into the CD-ROM drive.
(2) Double-click the **Start Here OS X** icon. Follow the on-screen instructions.
(3) Click **Initial Setup** on the menu screen.
(4) You can view the Initial Setup instructions.

3.1.1 Install the drum unit assembly

(1) Open the front cover by pressing the front cover release button.

(2) Unpack the drum unit assembly. Rock it from side to side several times to distribute the toner evenly inside the assembly.

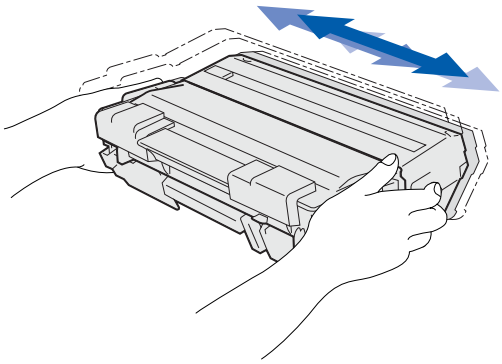

Fig. 2-2

(3) Put the drum unit assembly into the printer.

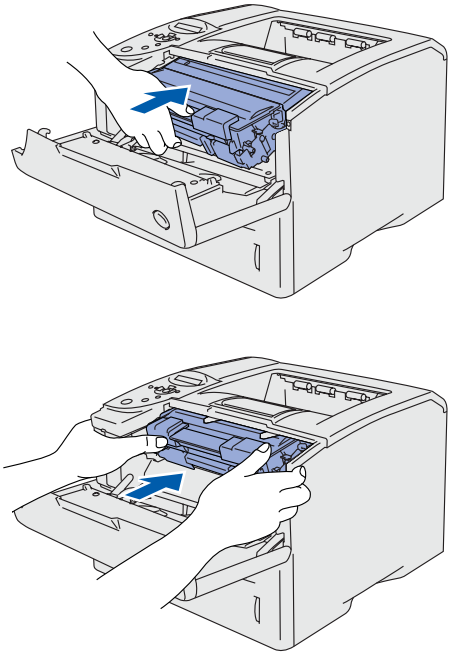

Fig. 2-3

(4) Close the front cover.

3.1.2 Load paper into the paper tray

(1) Pull the paper tray completely out of the printer.

(2) While pressing the paper guide release lever, slide the adjusters to fit the paper size. Check that the guides are firmly in the slots.

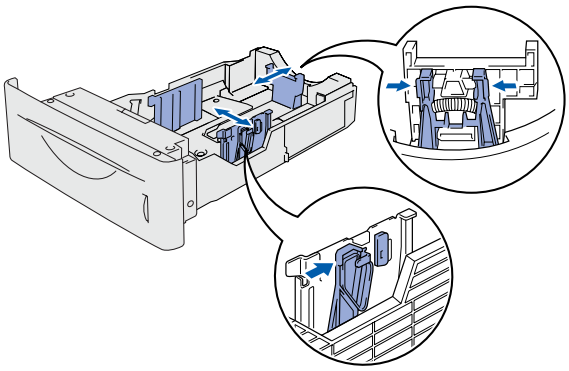

Fig. 2-4

NOTE:

For Legal size paper, press the universal guide release button and pull out the back of the paper tray.

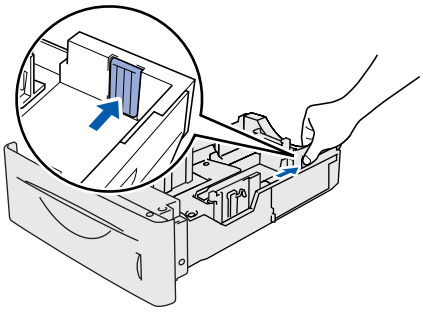

Fig. 2-5

(3) Fan the stack of paper well to avoid paper jams and misfeeds.

(4) Put paper in the paper tray. Check that the paper is flat in the tray and below the maximum paper mark.

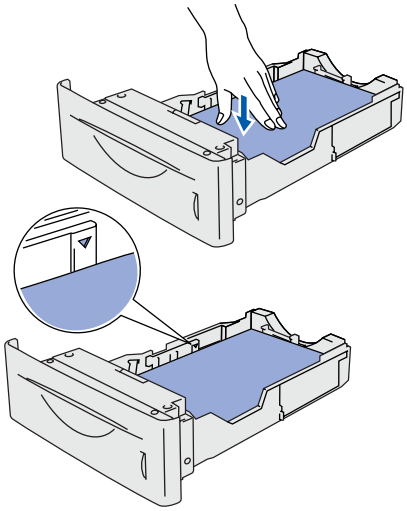

Fig. 2-6

(5) Put the paper tray firmly back in the printer.

3.1.3 Print a test page

(1) Make sure the printer power switch is off. Connect the AC power cord to the printer. Do not connect the interface cable. Connecting the interface cable is done when installing the driver.

(2) Plug the AC power cord into an AC power outlet/socket. Turn the power's power switch on.

(3) After the printer has finished warming up, the READY message appears.

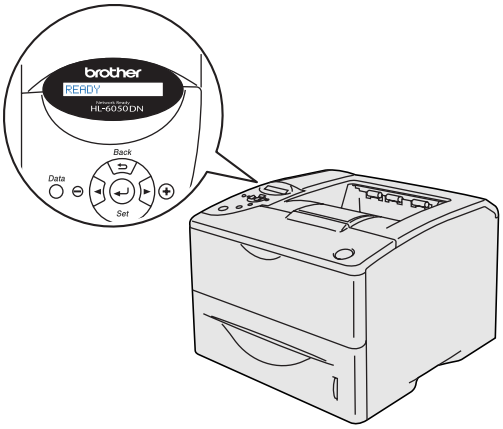

Fig. 2-7

(4) Press the Go button. The printer prints a demo page. Check that the demo page has printed correctly.

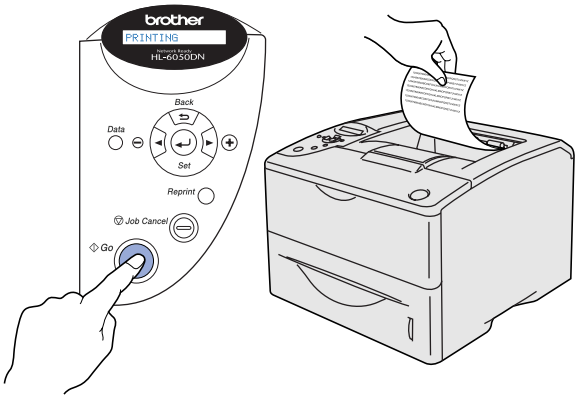

Fig. 2-8

3.1.4 Setting our language on the control panel

(1) Press the + button until SETUP is displayed. Press the Set button.

(2) Press the Set button again.

(3) Press the + or – button to select your language. Press the Set button to accept.

4. CONTROL PANEL OPERATION

The printer has one LCD, seven buttons and one LED on the control panel. The LED and LCD display indicate the printer status, and pressing the switches enables several functions in the printer.

The display also shows the current printer status. When you use the control panel switches, the display will change.

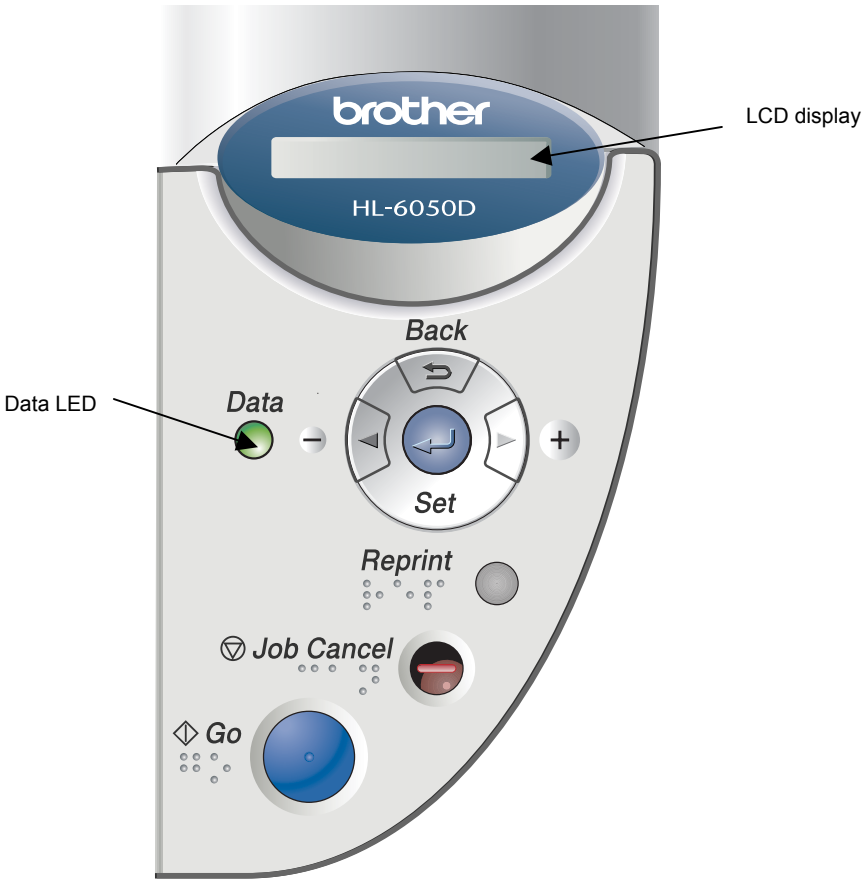

Fig. 2-9

4.1 Data LED Indications

The Data LED (orange) indicates with orange lamp the current status of the printer.

LED	Printer status
On	Data is in the printer memory.
Blinking	Receiving or processing data.
Off	No data left in the memory.

4.2 Panel Switches Functions

You can control the basic printer operations and change various printer settings with 7 buttons (**Go, Job Cancel, Reprint, +, -, Set, Back**).

Key	Function
Go	Exit from the control panel menu, reprint settings and error messages. Pause / Continue printing.
Job Cancel	Stop and cancel the printer job in progress.
Reprint	Select the number of extra copies. (1-999)
+	Move forward and backward through menus.
-	Move forward and backward through the available options.
Set	Select the control panel menu. Set the selected menus and settings.
Back	Go back one level in the menu.

4.2.1 Go button

The panel indications can be changed from the current status (MENU, ERROR and REPRINT settings) by pressing the **Go** button once. For ERROR indications, the control panel changes when the error is cleared.

You can pause printing with the **Go** button. Pressing the **Go** button again restarts the print job and clears the pause. During a pause, the printer is in the off-line.

NOTE:

*If the printer is in pause mode and you do not want to print the data that is left, you can cancel the job by pressing **Job Cancel** button. Once the job has been cancelled the printer will return to the READY state.*

4.2.2 Job Cancel button

You can cancel the processing or printing of data with the **Job Cancel** button. The display shows "`JOB CANCELLING`" until the job is cancelled. After canceling the job, the printer returns to the "`READY`" state. When the printer is not receiving data or printing, the display shows "`NO DATA!!!`" and you cannot cancel the job.

4.2.3 Reprint button

If you want to reprint a document that has just been printed, you can reprint it by pressing the **Reprint** button. Also, if you have created a document that you wish to share with colleagues, simply spool the document to a non-secure area of the printer.
This document can then be re-printed by anyone who is on the network or at the printer control panel.

You can use the **Reprint** button when the printer is READY or PAUSE state

If you want to print Proof, Public or Secure data, we recommend that you install the optional CompactFlash card.

Reprinting from RAM:

If you do not install a CompactFlash card, you can reprint from random access memory (RAM). The reprint data in RAM will be deleted when the printer is turned off.

i) Press the **Set** button on the control panel to exit from the READY state and select RAMDISK SIZE in the SETUP menu.

ii) The present RAM disk is 0MB. Press the **+** button to increase the reprint RAM size in increments of 1MB.

NOTE:

- *When you increase the RAM size for secure printing, the work area of the printer is decreased and the printer performance will be reduced. Make sure that you reset the RAM disk size to 0MB after you finish using Secure Printing.*
- *When you store data in RAM, the data will be deleted when the printer is turned off.*
- *We also recommend that you add more RAM if you want to be able to print a lot of secure data.*

(1) Reprinting the last job

You can reprint the data from the last print job without sending it from the computer again.

NOTE:

- *If REPRINT setting is set to OFF on the control panel and you press the **Reprint** button, the LCD shows "NO DATA STORED" for a short time.*
- *If you want to cancel reprinting, press the **Job Cancel** button.*
- *If the printer does not have enough memory to spool the print job data, it will only print the last page.*
- *Pressing the **–** or **+** button makes the number of reprint copies decrease or increase. You can select between 1 and 999 COPIES.*

Reprint the last job 3 times

1. Set the REPRINT setting is ON by using the control panel buttons to enter the SETUP menu.

NOTE:

If you print with the driver we have supplied with the printer, the settings for Job Spooling in the printer driver will take priority over the settings made on the control panel.

2. Press the **Reprint** switch.

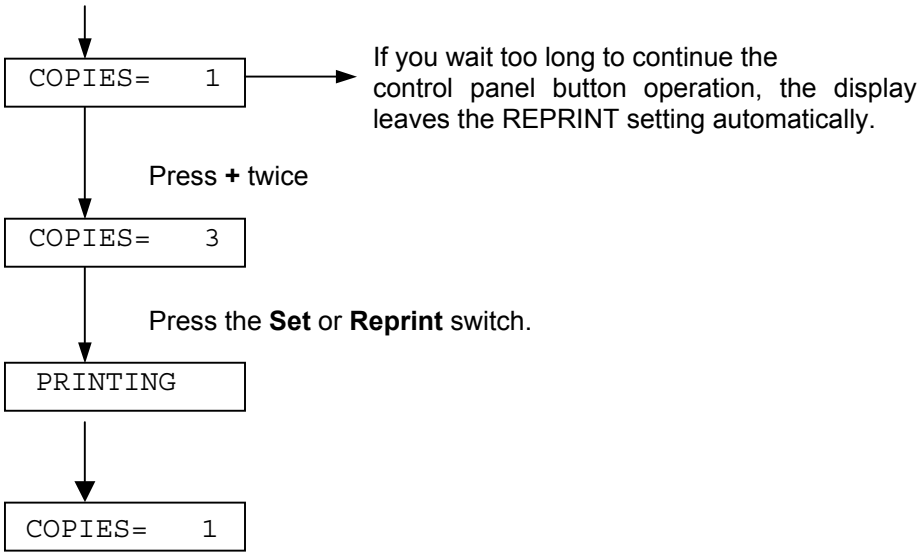

NOTE:

*1) If you press the **Go** button twice, the printer will leave the **REPRINT** setting.*

*2) If you want to reprint the data and have pressed the **Go** button, the display shows "PRESS SET TO PRINT". Press the **Set** or **Reprint** button to start reprinting, or press **Go** again to cancel the reprint job.*

(2) Printing SECURE data

Secure documents are password protected and only those people that know the password will be able to print the document. The printer will not print the document when you have sent it for printing, to print the document you must use the control panel of the printer or connect to the printer using a web browser.

When you want to delete the spooled data, you can carry out this operation on the control panel or in the web based management software.

NOTE:

- *If there is data in the job information that cannot be displayed on the LCD, the display shows "?".*

Operations for printing secure data

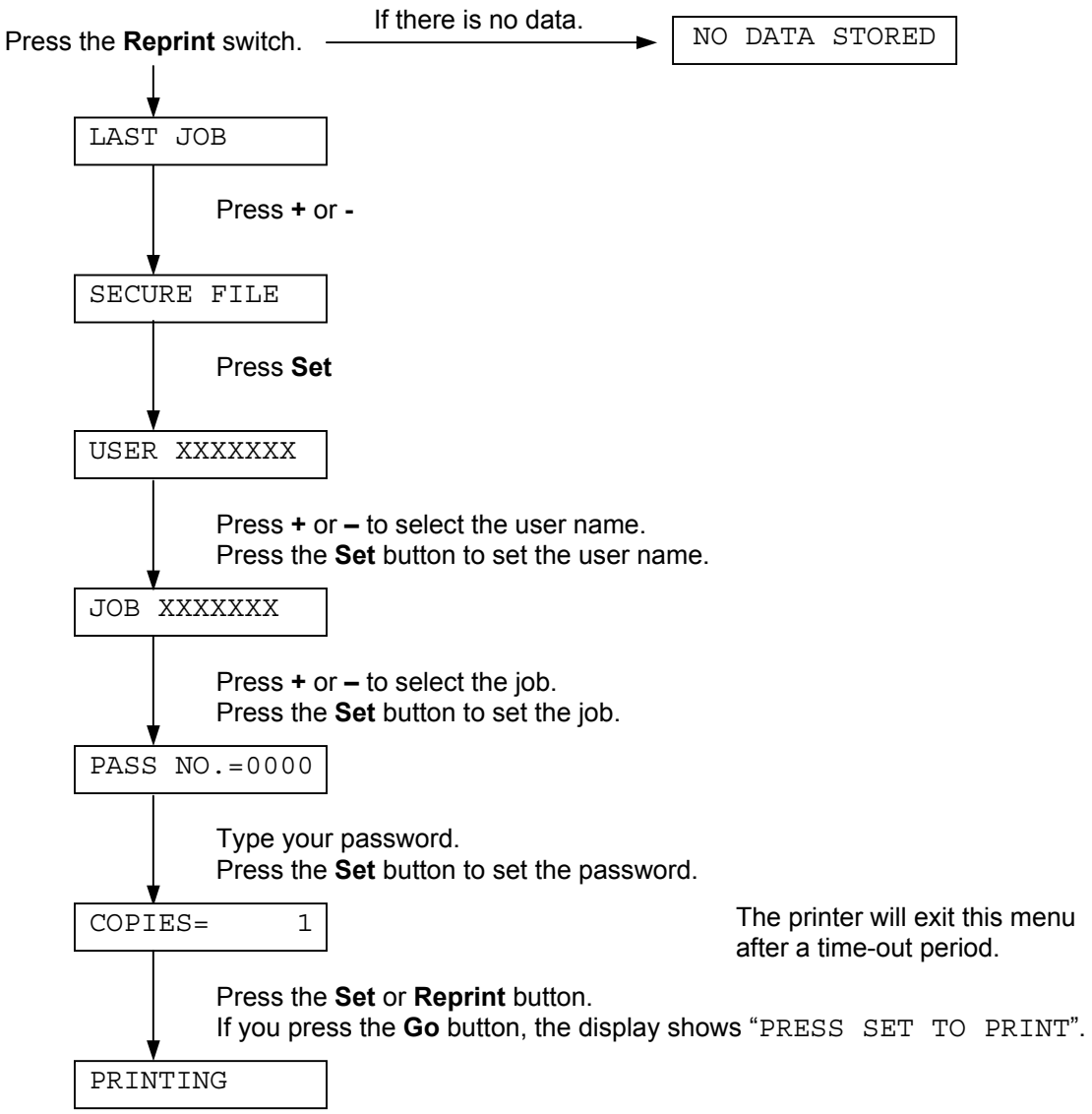

When there is no reprint data in memory

If the printer does not have reprint data in the memory and you press the **Reprint** button, the LCD shows "NO DATA STORED."

When you cancel the reprinting job

Pressing the **Job Cancel** button allows you to cancel the reprint job. The **Job Cancel** button also allows you to cancel a paused reprint job.

(3) Printing Proof data

You can use this setting to reprint Proof data that has been printed and has no security settings. Documents that are placed in the Proof area are available to anyone. You might use this setting for a document that will be moved to a public folder at a later date.

When the area to spool data is full, the earliest data is automatically deleted first. The order of deleting data is not connected to the order of reprinting.

NOTE:

1) *If you have not installed the optional CompactFlash card, the reprint data will be deleted when the printer is turned off.*

2) *If there is data in the job information that cannot be displayed on the LCD, the display shows '?'.*

(4) Printing Public data

You can use this setting to reprint documents that are stored in a Public area of the printer memory. Documents here will not be protected by a password and anyone can access then using the front panel or a web browser. The printer will not print a Public document when you send it to the printer. You must use the control panel of the printer or connect to the printer through a web browser.

Public data can be deleted using the control panel of the printer or from the web-based management software.

NOTE:

1). *If you have not installed the optional CompactFlash card, the reprint data will be deleted when the printer is turned off.*

2). *If there is data in the job information that cannot be displayed on the LCD, the display shows '?'.*

4.2.4 + & - button

If you press the **+** or – button when the printer is in the on-line (READY), it goes off-line and the LCD displays the menu.

(1) To move through menus on the LCD

If you press the **+** or **–** button when the printer is in the on-line (READY), it goes off-line and the LCD displays the current mode.

You can go to other menus by pressing the **+** or **–** button. Pressing the **+** or **–** button allows you to move forward or backward through the menus and settings on the display. Press or keep pressing the button until you see the setting you want.

(2) To enter numbers

There are two ways to enter numbers. You can press the **+** or **–** button to move up or down one number at a time, or you can hold down the **+** or **–** button to move faster. When you see the number you want, press the **Set** button.

4.2.5 Set button

If you press the **Set** button when the printer is in the on-line (READY), it goes off-line and the LCD goes to the menu.

Pressing the **Set** button allows you to choose the displayed menu or option. After changing a setting, an asterisk appears briefly on the right-hand side of the message.

4.2.6 Back button

If you press the **Back** button when the printer is in the on-line (READY), it goes off-line and the LCD goes to the menu.

Pressing the **Back** button allows you to return to the previous level from the current menu level. The **Back** button also allows you to choose the previous digit while setting numbers. When you select a setting and it does not have an asterisk (**Set** button was not pressed), the **Back** button allows you to return to the previous menu level with the original setting unchanged.

NOTE:

*When you press the **Set** button to choose a setting, an asterisk appears briefly at the end of the display. Since the asterisk shows what you have chosen, you can easily see the current setting as you look through the display.*

4.3 LCD Display

The display shows the current printer status. When you use the control panel switches, the display will change.

When you take the printer off-line, the display changes to show the selected emulation.

If any problems occur, the display shows the corresponding operator call, error, or service call message to prompt you to take an action. For more information about these messages, see CHAPTER 6 'TROUBLESHOOTING'.

4.3.1 Backlights

The backlight of the LCD shows the current printer status with the different colors and the light indications (on, off and blinking).

Signal	Status
Off	The printer is power off or in sleep status.
Green (General)	Warming up
	Ready to print
	Printing
	Job cancelling
Red (Error)	There is a problem with the printer.
Orange (Setting)	The printer is off-line.
	Choosing a menu.
	Setting Reprint times
	Pause

4.3.2 Printer status messages

The following table shows the printer status messages that are displayed during normal operation:

Printer Status Message	Meaning
`IGNORE DATA`	Printer is ignoring data processed using PS driver.
`JOB CANCELLING`	Cancelling the job.
`NOW INITIALIZING`	The printer is setting up.
`PAUSE`	The printer has suspended its operations. Press the Go button to start the printer again.
`PRESS SET TO PRINT`	Press the Set button to start printing.
`PRINTING`	Printing.
`PROCESSING`	Busy processing data.
`PROGRAMING-WAIT`	Accessing CompactFlash card.
`RAM SIZE=XX MB`	This printer has XX MB memory.
`READY`	Ready to print.
`RESET TO FACTORY SETTING`	The printer settings returns to the factory settings.
`RESET TO USER SETTING`	The printer settings returns to the user settings.
`RESOLUTION ADAPT`	Printing with reduced resolution.
`SELF TEST`	Performing self-diagnostics.
`SLEEP`	In sleep state.
`WARMING UP`	The printer is warming up.

4.4 How to Use the Control Panel

When you use the Menu buttons (**+**, **–**, **Set** or **Back)**, remember the following basic steps:

- If no control panel operations are performed for 30 seconds, the LCD automatically returns to READY.
- When you press the **Set** button to choose a setting, an asterisk appears at the end of the display for a short time. After that, the display returns to the previous menu level.
- After changing the status or a setting, pressing the **Back** button before you press the **Set** button will cause the display to return to the previous menu level with the original setting unchanged.
- There are two ways to input numbers. You can press **+** or **–** to scroll up or down one number at a time, or you can hold down **+** or **–** to scroll faster. The blinking number is the one that you can change.

For example: If you feed paper from the MP tray as a priority, change the MP FIRST setting to ON as follows.

The default setting is OFF. Turn this setting ON if you want to.

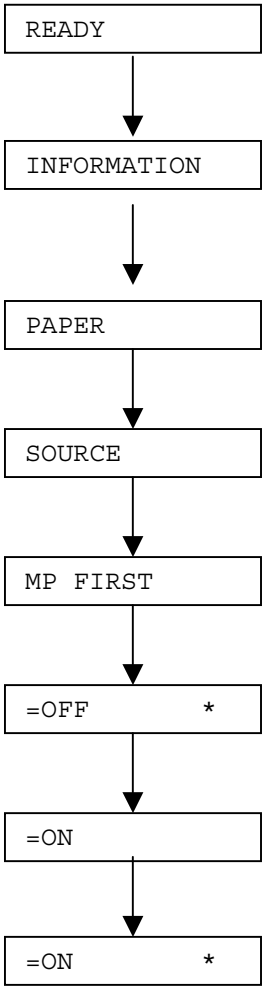

Press any of the Menu buttons (**+**, **-**, **Set** or **Back**) to take the printer off-line.

Press the **+** or **–** button to move forward or backward through the menus until PAPER is displayed.

Press the **Set** button to move to the next menu level.

Press the **+** or **-** button.

Press the **Set** button.

Press the **+** button.

Press the **Set** button.
An asterisk * briefly appears at the end of the display.
The default setting is indicated by an “ * ”.

4.5 Control Panel Setting Menu

There are 8 modes. For more information about the selections available for each mode, refer to the pages listed below.

INFORMATION:
For more information, see subsection 4.5.1 'INFORMATION' in this Chapter.

PAPER:
For more information, see subsection 4.5.2 'PAPER' in this Chapter.

QUALITY:
For more information, see subsection 4.5.3 'QUALITY' in this Chapter.

SETUP:
For more information, see subsection 4.5.4 'SET UP' in this Chapter.

PRINT MENU:
For more information, see subsection 4.5.5 'PRINT MENU' in this Chapter.

NETWORK: (HL-6050DN only)
For more information, see subsection 4.5.6 'NETWORK ' in this Chapter.

INTERFACE:
For more information, see subsection 4.5.7 'INTERFACE' this Chapter.

RESET MENU:
For more information, see subsection 4.5.8 'RESET MENU' in this Chapter.

4.5.1 Information

Display Shows	Description	
PRINT SETTINGS	Print the print settings page.	
PRINT TEST	Print the test page.	
PRINT DEMO	Print the demonstration sheet.	
PRINT FILE LIST	Print the list of data saved in the CompactFlash card or in the embedded memory when the CompactFlash card has not been installed..	
PRINT FONTS	Print the font list and samples.	
	Sub-setting	**Description**
VERSION	SER.NO=#########	Shows printer serial number
	ROM VER=####	Shows ROM version.
	ROM DATE ##/##/##	Shows ROM date.
	NET VER=####	Shows network version (HL-6050DN only).
	RAM SIZE=###MB	Shows the size of memory in this printer.
MAINTENANCE	PAGE COUNTER	=###### Shows the current total printed pages.
	DRUM COUNT	=###### Shows the pages printed with drum unit.
	REMAIN DRUM	=###### Shows the pages left to print with drum unit.
	REMAIN PF KITMP	=###### Shows the pages left to print with PF kit MP.
	REMAIN PF KIT1	=###### Shows the pages left to print with PF kit 1.
	REMAIN PF KIT2	=###### Shows the pages left to print with PF kit 2.
	REMAIN FUSER	=###### Shows the pages left to print with fuser unit.
	REMAIN LASER	=###### Shows the pages left to print with laser unit.

4.5.2 Paper

Display Shows	Description
SOURCE	=AUTO / MP/ TRAY1 / TRAY2 * Selects which paper tray the paper will be fed from.
PRIORITY	=MP>T1>T2 / T1>T2>MP / T1>T2
MP FIRST	=ON / OFF Selects whether to feed paper from the MP tray as a priority.
MP SIZE	=ANY / LETTER / LEGAL / A4 / … Selects the size of paper you loaded in the MP tray, for example, A4/ Letter/ Legal/….
MANUAL FEED	=OFF / ON Selects whether or not you want to feed paper manually.
TRAY1 SIZE	= DETECT SENSOR / LETTER / LEGAL / A4 / … Selects the size of paper you loaded in the standard upper tray, for example, A4/ Letter/ Legal/….
TRAY2 SIZE	= DETECT SENSOR / LETTER / LEGAL / A4 / … Selects the size of paper you loaded in the optional lower tray, for example, A4/ Letter/ Legal/….
DUPLEX	=OFF / ON (LONG BIND) / ON (SHORT BIND) Select whether you want to automatically print on both sides of the paper.

* MP TRAY = Multi-purpose tray, TRAY1 = Upper paper tray, TRAY2 = Optional lower tray

4.5.3 Quality

Display Shows	Description
RESOLUTION	=300 / 600 / 1200 You can select a print resolution of 300, 600 or 1200dpi (dots per inch).
HRC	=MEDIUM/ DARK/ OFF/ LIGHT HRC: High Resolution Control (HRC) offers improved print quality of letters, numbers and graphics that conventional laser printers cannot achieve, with a resolution of 300 or 600 dpi.
TONER SAVE	=OFF / ON
DENSITY	=-6, -5, -4, -3, -2, -1, 0, 1, 2, 3, 4, 5, 6 Increases or decreases the print density.

4.5.4 Setup

Display Shows	Description	
LANGUAGE	=ENGLISH / FRANÇAIS / …	
PANEL CONTROL	**Sub-setting**	**Description**
	LCD DENSITY	=0/1/2
	AUTO ONLINE	=ON/OFF
	BUTTON REPEAT	Sets the time for the display message to change when holding the + or – button at intervals of: 0.1, 0.2, 0.3, 0.4, 0.5, 1.0, 1.5 or 2.0 seconds. The factory setting is 0.1.
	MESSAGE SCROLL	Sets the time in seconds that an LCD message will scroll across the display. From Level 1=0.2 to Level 10=2.0. The factory setting is Level 1.
ERROR BUZZER	OFF	
	NORMAL	There will be three sets of the Buzzers when an error occurs.
	SPECIAL	Buzzers five times consecutively until the error is cleared.
PANEL BUZZER	OFF	Disables buzz function when you press the button.
	ON	Enables buzz function when you press the button.
BUZZER VOLUME	LOW	Makes the buzz lower.
	HIGH	Makes the buzz higher.
POWER SAVE TIME	=1 to 240 MIN.	
AUTO CONTINUE	=OFF / ON	
LOCK PANEL	=OFF / ON Turns the lock panel setting ON or OFF.	
	PASS NO.=###	
REPRINT	=ON / OFF	
PAGE PROTECTION	PROTECT = AUTO	AUTO, OFF, LETTER, A4, LEGAL
EMULATION	=AUTO (EPSON) / AUTO (IBM) / HP LASERJET / …	
KEEP PCL	=OFF / ON	
RAMDISK SIZE	=0 / 1 / 2 … MB	RESTART PRINTER?

DELETE STORAGE	Deletes the data in CompactFlash card.	
	Sub-setting	**Description**
	SECURE FILE	Selects the user name, job name and password.
	PUBLIC FILE	Selects the user name and job name.
	PROOF FILE	Selects the user name and job name.
	DATA ID (CF)	=####
	MACRO ID (CF)	=####
	FONT ID (CF)	=####
	FORMAT (CF)	OK?

4.5.5 Print menu

Display Shows	Description	
MEDIA TYPE	=PLAIN PAPER / TRANSPARENCIES / THIN PAPER / THICK PAPER / BOND PAPER / ENVELOPES / ENV.THIN/ RECYCLED PAPER / THICKER PAPER	
PAPER	Sets the paper size to LETTER, A4, LEGAL, FOLIO, EXECUTIVE, COM-10, MONARCH, C5, DL, DLL, B5, A5, A6, B6, JIS B5, A4 LONG, POST CARD, ORGANIZER J, ORGANIZER K, ORGANIZER L, ORGANIZER M	
COPIES	You can check the total number of printed pages. =1 to 999 Shows the number of printed pages.	
ORIENTATION	=PORTRAIT / LANDSCAPE This printer can print pages in portrait or landscape orientation.	
PRINT POSITION	This printer can be adjusted to align the page format.	
	Sub-setting	**Description**
	X OFFSET=0	=-500, -499 … +499, +500 Moves the print start position (at the top-left corner of pages) horizontally up to –500 (left) to +500 (right) dots in 300 dpi.
	Y OFFSET=0	=-500, -499 … +499, +500 Move the print start position (at the top-left corner of pages) vertically up to –500 (up) to +500 (down) dots in 300 dpi.
AUTO FF TIME	=OFF / 1, 2, 3 … 99 (sec) Allows you to print the remaining data without pressing the **Go** button.	
FF SURPRESS	=OFF / ON Turns the feed suppress (PAUSE) setting ON or OFF.	

HP LASERJET	Sub-setting	Description
	FONT NO.	=I000…####
	FONT PITCH/POINT	=##.##
	SYMBOL SET	PC-8 / … Sets the symbol set or the character set.
	TABLE PRINT	Prints code table
	AUTO LF	=OFF / ON ON: CR→CR+LF, OFF: CR→CR
	AUTO CR	=OFF / ON ON: LF→LF+CR, FF+CR, or VT→VT+CR OFF: LF→LF, FF→FF, or VT→VT
	AUTO WRAP	=OFF / ON Selects whether a line feed and carriage return will happen when the printer reaches the right margin.
	AUTO SKIP	=ON / OFF Selects whether a line feed and carriage return will happen when the printer position reaches the bottom margin.
	LEFT MARGIN	=## Sets the left margin at column 0 to 70 columns at 10 cpi.
	RIGHT MARGIN	=## Sets the right margin at column 10 to 80 columns at 10 cpi.
	TOP MARGIN	=#.## Sets the top margin at a distance from the top edge of the paper: 0, 0.33, 0.5, 1.0, 1.5 or 2.0. The factory setting is 0.5.
	BOTTOM MARGIN	=#.## Sets the bottom margin at a distance from the bottom edge of the paper: 0, 0.33, 0.5, 1.0, 1.5 or 2.0. The factory setting is 0.33 (None-HP), 0.5 (HP).
	LINES	=### Sets the number of lines on each page from 5 to 128 lines.

EPSON FX-850	Sub-setting	Description
	FONT NO.	=I000…####
	FONT PITCH/ POINT	=##.##
	CHARACTER SET	PC-8 / … Sets the symbol set or the character set.
	TABLE PRINT	Prints code table.
	AUTO LF	=OFF / ON ON: CR→CR+LF OFF: CR→CR
	AUTO MASK	=OFF / ON
	LEFT MARGIN	Sets the left margin at column 0 to 70 columns at 10 cpi.
	RIGHT MARGIN	Sets the right margin at column 10 to 80 columns at 10 cpi.
	TOP MARGIN	Sets the top margin at a distance from the top edge of the paper: 0, 0.33, 0.5, 1.0, 1.5 or 2.0. The factory setting is 0.33.
	BOTTOM MARGIN	Sets the bottom margin at a distance from the bottom edge of the paper: 0, 0.33, 0.5, 1.0, 1.5 or 2.0” The factory setting is 0.33.
	LINES	Sets the number of lines on each page from 5 to 128 lines.

	Sub-setting	Description
IBM PROPRINTER	FONT NO.	=I000 … ####
	FONT PITCH/POINT	=##.##
	CHARACTER SET	PC-8 / … Sets the symbol set or the character set.
	TABLE PRINT	Prints code table.
	AUTO LF	=OFF / ON ON: CR→CR+LF OFF: CR→CR
	AUTO CR	=OFF / ON
	AUTO MASK	=OFF / ON
	LEFT MARGIN	Sets the left margin at column 0 to 70 columns at 10 cpi.
	RIGHT MARGIN	Sets the right margin at column 10 to 80 columns at 10 cpi.
	TOP MARGIN	Sets the top margin at a distance from the top edge of the paper: 0, 0.33, 0.5, 1.0, 1.5 or 2.0” The factory setting is 0.33.
	BOTTOM MARGIN	Sets the bottom margin at a distance from the bottom edge of the paper: 0, 0.33, 0.5, 1.0, 1.5 or 2.0” The factory setting is 0.33.
	LINES	Sets the number of lines on each page from 5 to 128 lines.
BR-SCRIPT	ERROR PRINT	=OFF / ON
CARBON MENU	CARBON COPY	OFF/ ON/ AUTO/ PARALLEL
	COPIES	=1 to 8
	COPY 1 TRAY	=AUTO/REMAINING, MP, TRAY1, TRAY2
	COPY 1 MACRO	=(ID number), OFF
	COPY 2 TRAY : : COPY 8 TRAY	=AUTO/REMAINING, MP, TRAY1, TRAY2 Appears when printing 2 pages or more.
	COPY 2 MACRO : : COPY 8 MACRO	=(ID number) Appears when printing 2 pages or more.

4.5.6 Network (HL-6050DN only)

Display Shows	Description	
TCP/IP	**Sub-setting**	**Description**
	TCP/IP ENABLE	=ON / OFF
	IP ADDRESS=	###, ###, ###, ###
	SUBNET MASK=	###, ###, ###, ###
	GATEWAY=	###, ###, ###, ###
	IP BOOT TRIES	=#
	IP METHOD	=AUTO / STATIC / RARP / BOOTP / DHCP
	APIPA	=ON / OFF
NETWARE	NETWARE ENABLE	=ON / OFF
	NET FRAME	=AUTO / 8023 / ENET / 8022 / SNAP
APPLETALK	=ON / OFF	
NETBEUI	=ON / OFF	
DLC/LLC	=ON / OFF	
NETBIOS/IP	=ON / OFF	
ENET	=ATUO / 100B-FD / 100B-HD / 10B-FD / 10B-HD	

4.5.7 Interface

Setting Menu	Description	
SELECT	=ATUO / PARALLEL / USB / NETWORK	
AUTO IF TIME	= 1, 2, 3 … 99 (sec) You need to set the time-out period for the auto interface selection.	
INPUT BUFFER	= Level 1, 2, 3 … 15 Increases or decreases the input buffer capacity.	RESTART PRINTER?
PARALLEL	When using the parallel interface	
	Sub-setting Menu	**Description**
	HIGH SPEED	=ON / OFF Turns high-speed parallel communications ON or OFF..
	BI-DIR=ON/OFF	=ON / OFF Turns bi-directional parallel communications ON or OFF.
	INPUT PRIME	=ON / OFF Turns prime signal ON or OFF.
USB 2.0	**HIGH SPEED**	=ON / OFF Turns High-Speed USB 2.0 communications ON or OFF.

4.5.8 Reset menu

Setting Menu	Description
RESET PRINTER	Resets the printer and restores all printer settings (including command settings) to settings you have previously made with the control panel buttons.
FACTORY RESET	Resets the printer and restores all printer settings (including command settings) to the factory settings. See subsection 4.5.11 'List of factory settings' in this Chapter.

4.5.9 Set IP address

```
INFORMATION
```

Press the **+** or **–** button until NETWORK appears (and to display each setting shown below.)

```
NETWORK
```

Press the **Set** button.

```
TCP/IP
```

Press the **Set** button.

```
TCP/IP ENABLE
```

Press the **+** button.

```
IP ADDRESS=
```

Press the **Set** button.

```
192.0.0.192     *
```

The last digit in the first part of the number is blinking.
Press the **+** or **–** button to increase or decrease the number.
Press the **Set** button to go to the next number.

```
123.0.0.192     *
```

Repeat this process until you have set your IP address.

```
123.45.67.89
```

Press the **Set** button to complete the IP address.

```
123.45.67.89    *
```

An asterisk appears at the end of the display.

4.5.10 About emulation modes

This printer has the following emulation modes.

HP LserJet Mode

The HP LaserJet mode (or HP mode) is the emulation mode in which this printer supports the PCL6 language of the Hewlett-Packard LaserJet laser printer. Many software applications support this type of laser printer. Using this mode will allow your printer to operate at its best with those applications.

BR-Script 3 Mode

BR-Script is an original page description language and a PostScript language emulation interpreter. This printer supports level 3. The BR-Script interpreter of this printer allows you to control text and graphics on pages.

See the following commercial manuals for more technical information about PostScript commands.

- Adobe Systems Incorporated. PostScript Language Reference, third Edition. Addison-Wesley Publishing Company, Inc., 1999. ISBN: 0-201-37922-8
- Adobe Systems Incorporated. PostScript Language Program Design. Addison-Wesley Publishing Company, Inc., 1988. ISBN: 0-201-14396-8
- Adobe Systems Incorporated. PostScript Language Tutorial and Cookbook. Addison-Wesley Publishing Company, Inc., 1985. ISBN: 0-201-10179-3

EPSON FX-850 and IBM Proprinter XL Mode

The EPSON FX-850 and IBM Proprinter XL modes are the emulation modes that this printer supports to meet the industry-standard for dot matrix printers. Some applications support these dot matrix printer emulations. Use these emulation modes so your printer will work well when printing from those types of applications.

4.5.11 List of factory settings

The following table shows the initial factory default settings.

NOTE:

- *The emulation mode affects the setting. Effective modes are shown in brackets in the following table.*
- *The following settings cannot be restored to the factory settings with FACTORY RESET in the RESET MENU mode: INTERFACE menu, HRC, PAGE PROTECTION, SCALABLE FONT, LOCK PANEL, PAGE COUNTER and local language for display messages.*
- *The COPY setting is always restored to the factory setting when the printer is turned off and on again.*
- It is not possible to reset NETWORK setting on the Control panel. If you wish to reset the print server back to its default factory settings (resetting all information such as the password and IP address information) hold down the Network Test Button of the Network board (NC-6100h) for more than 5 seconds.

Mode	Menu	Factory Setting	
PAPER	SOURCE	=AUTO	
	PRIORITY	=MP>T1>T2	
	MP FIRST	=OFF	
	MP SIZE	=ANY	
	MANUAL FEED	=OFF	
	TRAY1 SIZE	=DETECT SENSOR	
	TRAY2 SIZE	=DETECT SENSOR	
	DUPLEX	=OFF	
QUALITY	RESOLUTION	=600	
	HRC	=MEDIUM	
	TONER SAVE	=OFF	
	DENSITY	=0	
SETUP	LANGUAGE	=ENGLISH	
	PANEL CONTROL	**Subsetting**	**Factory setting**
		LCD DENSITY	=0
		AUTO ONLINE	=ON
		BUTTON REPEAT	=0.1 SEC
		MESSAGE SCROLL	LEVEL 1
	ERROR BUZZER	=OFF	
	PANEL BUZZER	=OFF	
	BUZZER VOLUME	=LOW	
	POWER SAVE TIME	=30MIN	
	AUTO CONTINUE	=OFF	
	LOCK PANEL	=OFF	
	REPRINT	=ON	
	PAGE PROTECTION	=AUTO	
	EMULATION	=AUTO(EPSON)	
	KEEP PCL	=OFF	
	RAMDISK SIZE	=0MB	

Mode	Menu	Factory Setting	
PRINT MENU	MEDIA TYPE	=PLAIN PAPER	
	PAPER	=A4 / LETTER	
	COPIES	=1	
	ORIENTATION	=PORTRAIT	
	PRINT POSITION	**Subsetting**	**Factory setting**
		X OFFSET	=0
		Y OFFSET	=0
	AUTO FF TIME	=5	
	FF SUPPRESS	=OFF	
	HP LASER JET	**Subsetting**	**Factory setting**
		FONT NO.	=I059
		FONT PITCH	=10.00 / 12.00
		SYMBOL SET	=PC-8
		AUTO LF	=OFF
		AUTO CR	=OFF
		AUTO WRAP	=OFF
		AUTO SKIP	=ON
		LEFT MARGIN	=####
		RIGHT MARGIN	=####
		TOP MARGIN	=####
		BOTTOM MARGIN	=####
		LINES	=####
	EPSON FX-850	FONT NO.	=I059
		FONT PITCH	=10.00 / 12.00
		SYMBOL SET	=US ASCII
		AUTO LF	=OFF
		AUTO MASK	=OFF
		LEFT MARGIN	=####
		RIGHT MARGIN	=####
		TOP MARGIN	=####
		BOTTOM MARGIN	=####
		LINES	=####

Mode	Menu	Factory Setting	
PRINT MENU (Continued)	IBM PROPRINTER	**Subsetting**	**Factory setting**
		FONT NO.	=I059
		FONT PITCH	=10.00 / 12.00
		SYMBOL SET	=PC-8
		AUTO LF	=OFF
		AUTO CR	=OFF
		LEFT MARGIN	=####
		RIGHT MARGIN	=####
		TOP MARGIN	=####
		BOTTOM MARGIN	=####
		LINES	=####
	BR-SCRIPT	ERROR PRINT	=OFF
	CARBON MENU	CARBON COPY	=OFF
		COPIES	=1
		COPY 1 TRAY	=AUTO
		COPY 2 TRAY : COPY 8 TRAY	COPY1 MACRO COPY8 MACRO =OFF
NETWORK	TCP/IP	TCP/IP ENABLE	=ON
		IP ADDRESS	=169.254.###.### *1
		SUBNET MASK	=255.255.0.0. *1
		GATEWAY	=0.0.0.0
		IP BOOT TRIES	=3
		IP METHOD	=AUTO
		APIPA	=ON
	NETWARE	NETWARE ENABLE	=ON
		NET FRAME	=AUTO
	APPLETALK	=ON	
	NETBEUI	=ON	
	DLC/LLC	=ON	
	NETBIOS/IP	=ON	
	ENET	=AUTO	

Mode	Menu	Factory Setting	
INTERFACE	**SELECT**	=AUTO	
	AUTO IF TIME	=5	
	INPUT BUFFER	=LEVEL 3	
	PARALLEL	**Subsetting**	**Factory setting**
		HIGH SPEED	=ON
		BI-DIR	=ON
		INPUT PRIME	=OFF
	USB 2.0	HIGH SPEED	=ON

*1 Automatic Private IP Addressing (APIPA) protocol automatically configures an IP address and subnet mask.

4.6 Other Control Features

The printer has the following useful features;

4.6.1 Sleep mode

When the printer does not receive data for a certain period of time (timeout), it enters sleep mode. Sleep mode acts as though the printer was turned off. The default timeout is 30 minutes. When Intelligent Sleep Mode is selected, it is automatically adjusted to the most suitable time-out setting depending on the frequency of your printer use.

While the printer is in sleep mode, the light on the display if off, but the printer can still receive data from the computer. Receiving a print file or document automatically wakes up the printer to start printing. Pressing one of the buttons will also wake up the printer.

NOTE:

- *When the printer goes into sleep mode, the fan will not stop until the printer engine has cooled down. The fan running time varies depending on the sleep mode timeout because the fan running conditions are defined as follows;*

1) The fan runs while the printer is in ready status.

2) The fan runs for at least 20 minutes after the printer goes into sleep mode.

- *Sleep mode allows the print engine to cool, so the temperature of the room and how long the printer has been in sleep mode affects the warm-up time. This warm-up time can take up to 20 seconds. The LCD back light turns green with the "WARMING UP" message on the display to indicate that the printer is warming up.*

5. NETWORK BOARD OPERATION

Installing the Brother network board (NC-6100h) allows you to connect the printer on a network running TCP/IP, IPX/SPX, AppleTalk, DLC/LLC and NetBEUI protocols. Many useful features, such as BRAdmin Professional for the administrator and Brother network printing software, are included on the CD-ROM supplied with this printer.

5.1 Installing the Network Board

(1) Turn off the printer power switch, and then unplug the printer.

(2) Slide and remove the side cover.

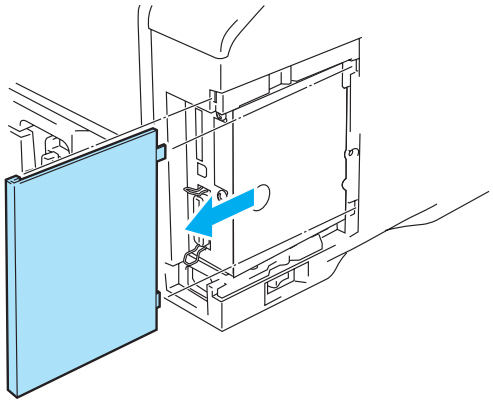

Fig. 2-10

(3) Open the interface access cover.

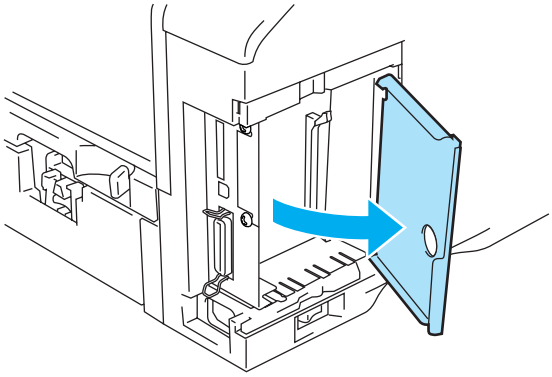

Fig. 2-11

(4) Loosen the two screws, and then remove the Network cover plate.

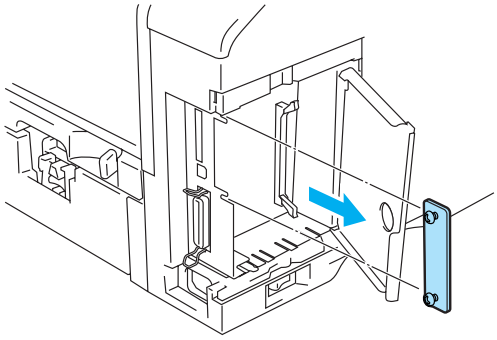

Fig. 2-12

(5) Put the network board connector firmly into the connector of the main controller board by aligning the two screws to the groove of the printer, and then secure it with the two screws.

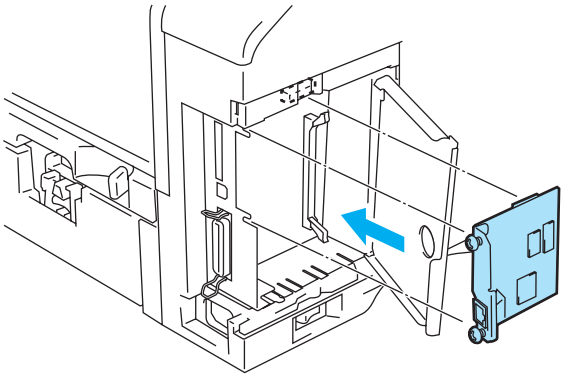

Fig. 2-13

(6) Close the interface access cover.
(7) Put the side cover back on.
(8) Connect one end of the Ethernet cable to the network port of the printer.
(9) Plug the printer back in, and then turn on the power switch.

Print configuration page

Press the network test button for less than 5 seconds to print a configuration page.

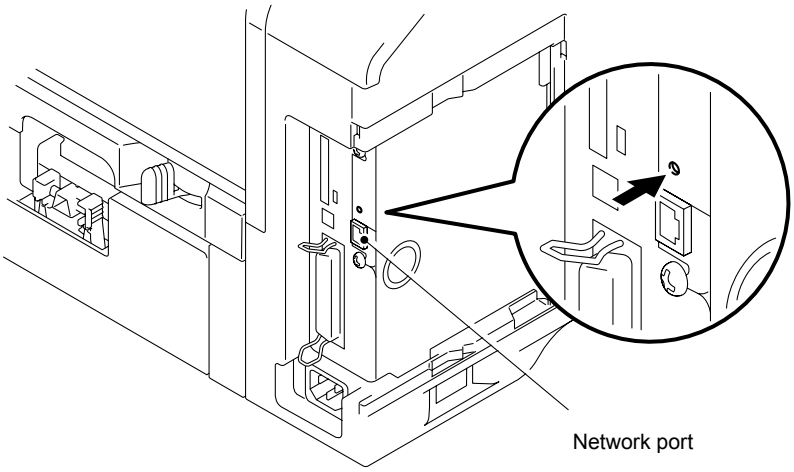

Fig. 2-14

5.2 Functions

5.2.1 LED functions

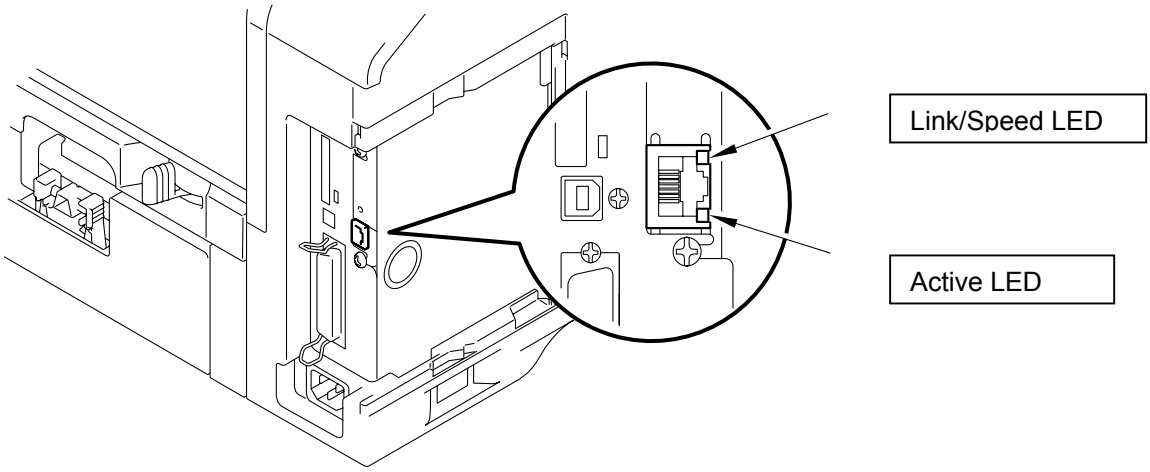

Fig. 2-15

No light:

If both of the two LEDs are off, then the print server is not connected to the network.

Link/Speed LED is orange: Fast Ethernet

Link/Speed LED is green: 10 Base T Ethernet

This Link/Speed LED will be orange if the print server is connected to a 100BaseTX Fast Ethernet network.

This Link/Speed LED will be green if the print server is connected to a 10 Base T Ethernet.

Active LED is yellow:

The Active LED will blink if the print server is receiving or transmitting data.

5.2.2 Factory default setting

If you wish to reset the print server back to its default factory settings (resetting all information such as the password and IP address information), hold down the Network Test button on the network board (NC-6100h) for more than 5 seconds.

6. PAPER TRAY INFORMATION (FOR EUROPE ONLY)

The paper tray fitted to the printer is different from the service manual information for printers shipped to Europe as follows:

(1) The paper tray supplied with the HL-6050/6050D/6050DN printer has a plastic rib on the paper tray cover.

(2) The plastic rib is removed from the tray cover for the paper tray supplied with the LT-6000, (optional Lower Tray Unit) as shown on the right;

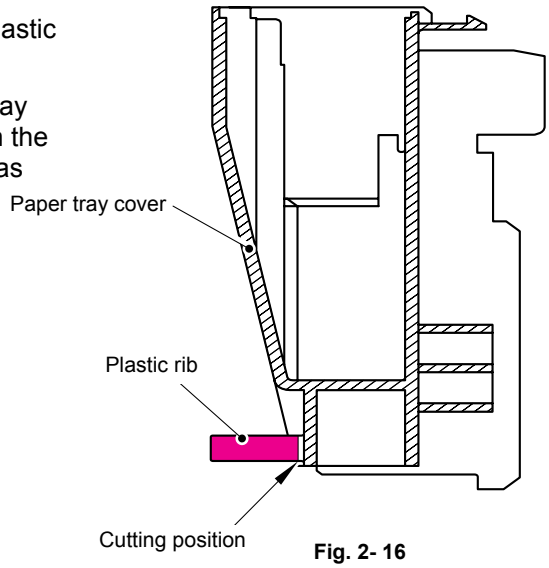

Fig. 2- 16

(3) If the optional LT-6000 Lower Tray Unit is installed onto the HL-6050/6050D/6050DN printer, it is necessary to exchange the tray supplied with the LT-6000 Unit with the upper tray already fitted into the printer. Install the tray originally fitted in the printer into the LT-6000 Unit.

Failure to do so will cause paper jams as the paper cannot be fed from the lower tray to the printer body because the plastic rib on the paper tray cover is blocking the paper path.

For paper tray supplied as spare parts, the plastic rib has been cut off so that you can use it as both an upper tray and lower tray.

CHAPTER 3 THEORY OF OPERATION

1. ELECTRONICS

1.1 General Block Diagram

Fig. 3-1 shows a general block diagram.

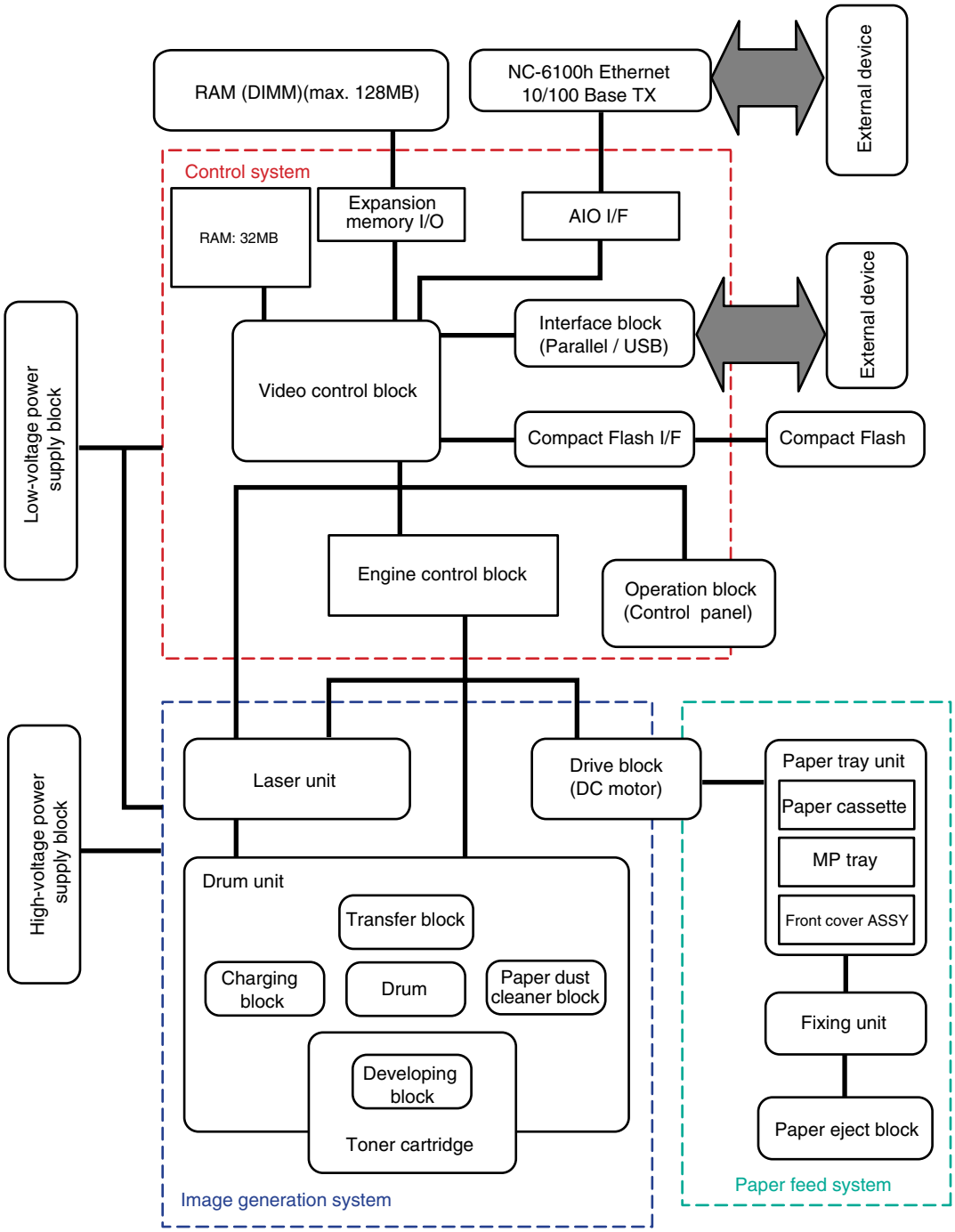

Fig. 3-1

1.2 Main PCB Block Diagram

Fig. 3-2 shows the block diagram of the main PCB.

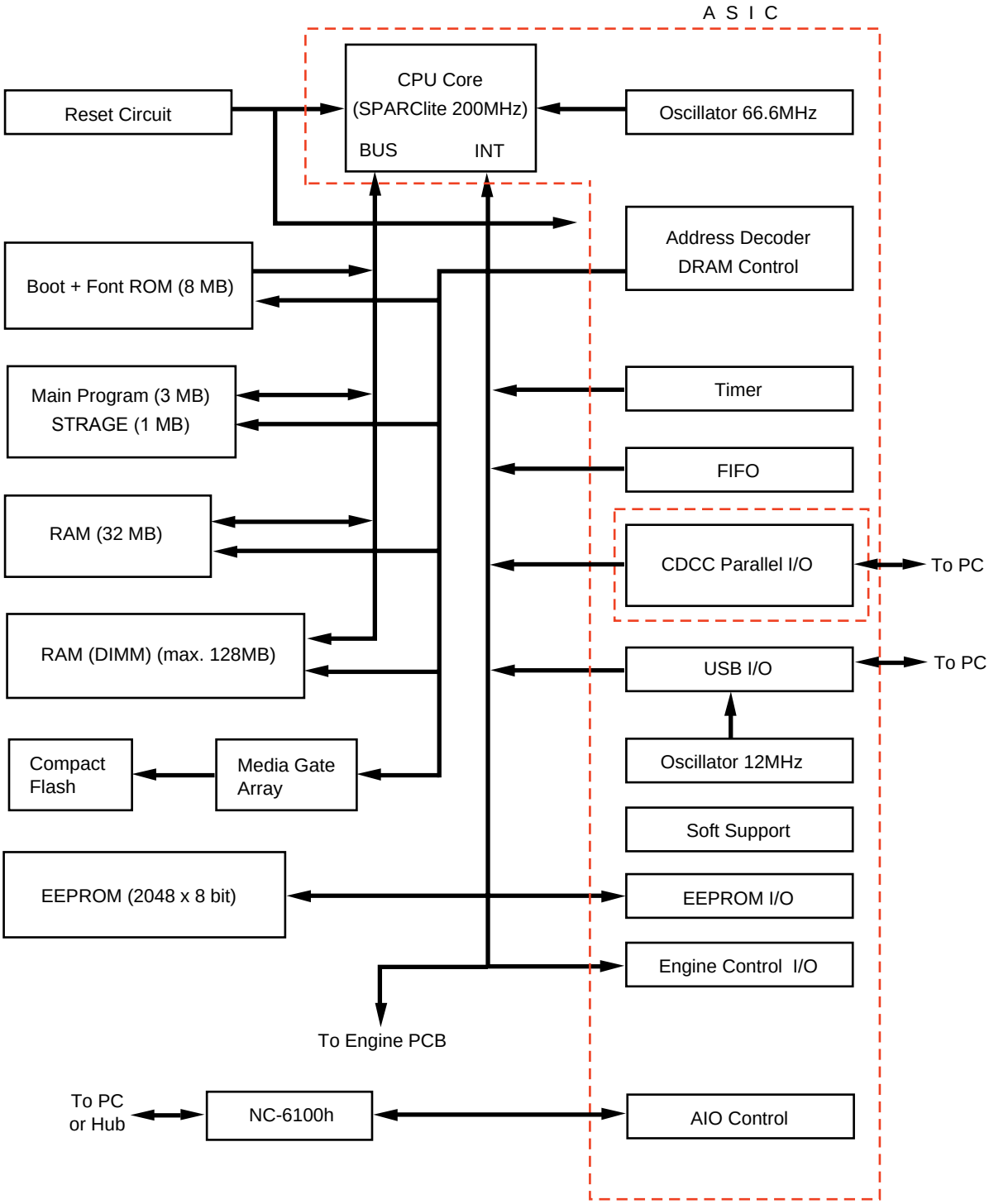

Fig. 3-2

1.3 Main PCB

For the entire circuit diagram of the main PCB, see APPENDIX 1. to 6. 'MAIN PCB CIRCUIT DIAGRAM' in this manual.

1.3.1 CPU

A Fujitsu 32bit RISC CPU, SPARClite is built in the ASIC. While the CPU is driven with a clock frequency of 66.66 MHz in the user logic block, it itself runs at 200 MHz, which is generated by multiplying the source clock by three.

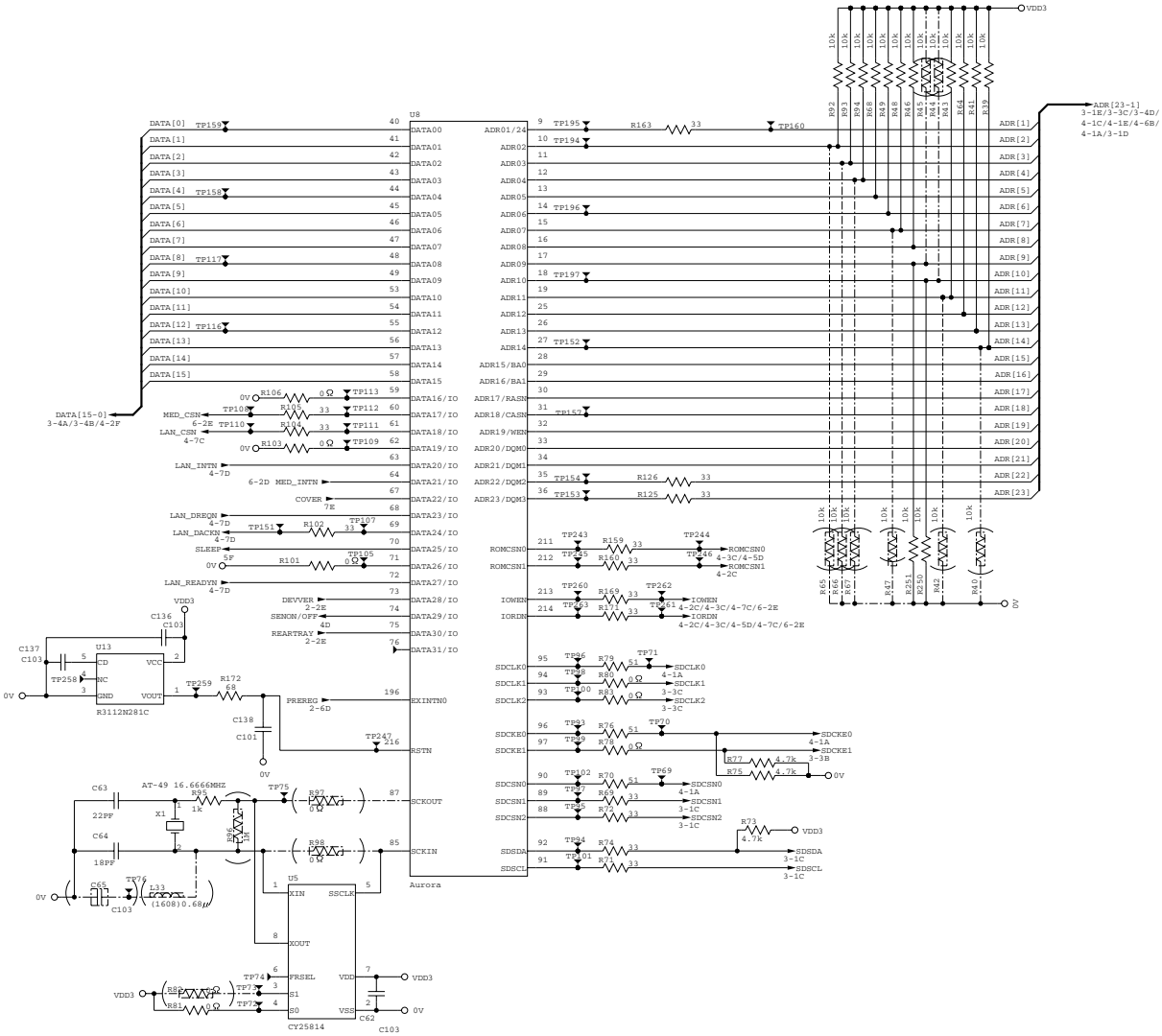

Fig. 3-3

The functions of the interface block communication with external devices are described below;

1.3.2 USB

Stores the data received from the PC into DRAM as controlled by the DMA controller. The transmission speed is 480Mbps or 12Mbps.

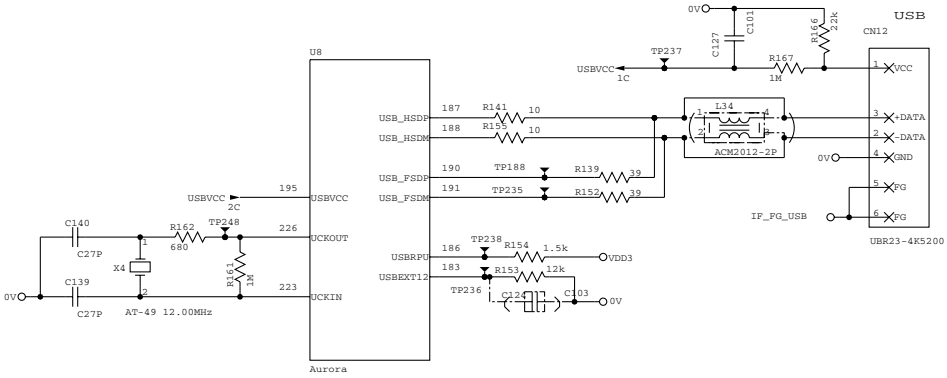

Fig. 3-4

1.3.3 IEEE1284

Stores the data received from the PC into DRAM as controlled by the DMA controller. It is applicable to both normal receiving and bi-directional communication (nibble mode, byte mode, ECP mode).
74LVX161284, 3.3V ⟷ 5.0V level shifter IC stores the pull-up resistance in signal wire at the connector side

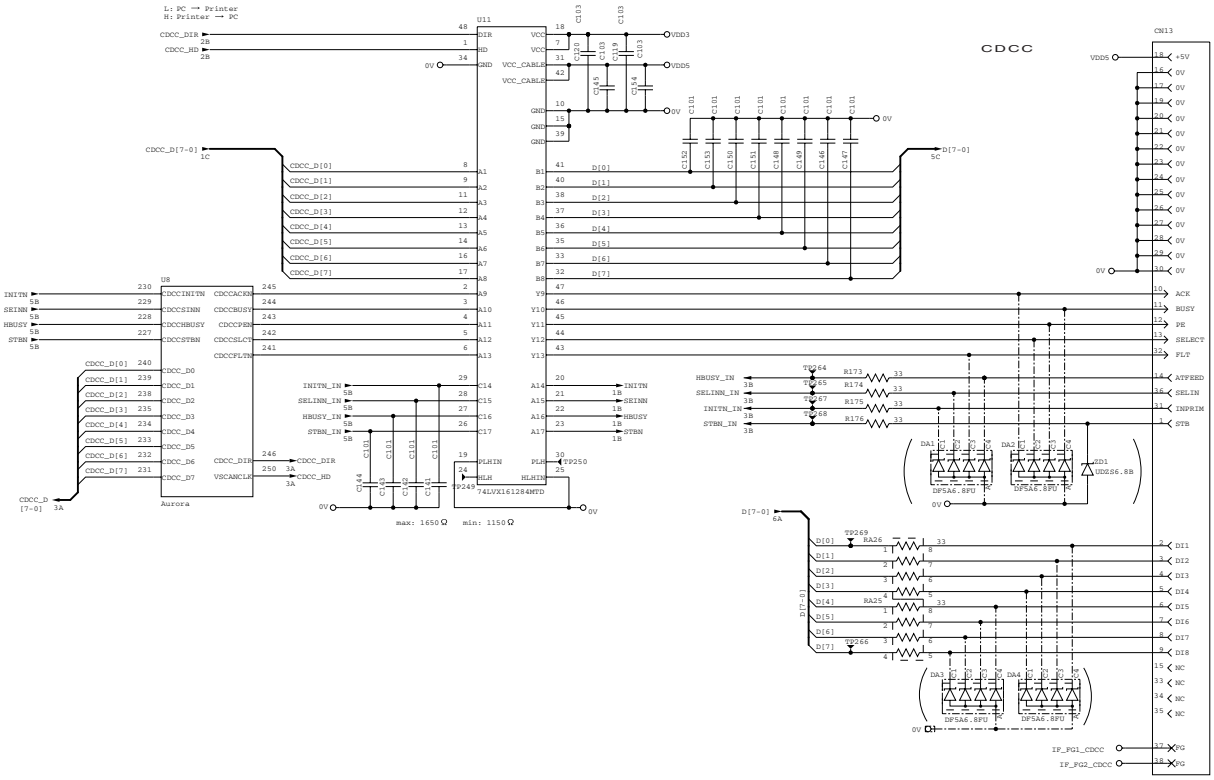

Fig. 3-5

1.3.4 Network Interface

The network supports 10 Base-T/100 Base-TX through NC-6100h connected via AIO Interface. NC-6100h and HL-6050DN are standard, 6050D, 6050 are optional.

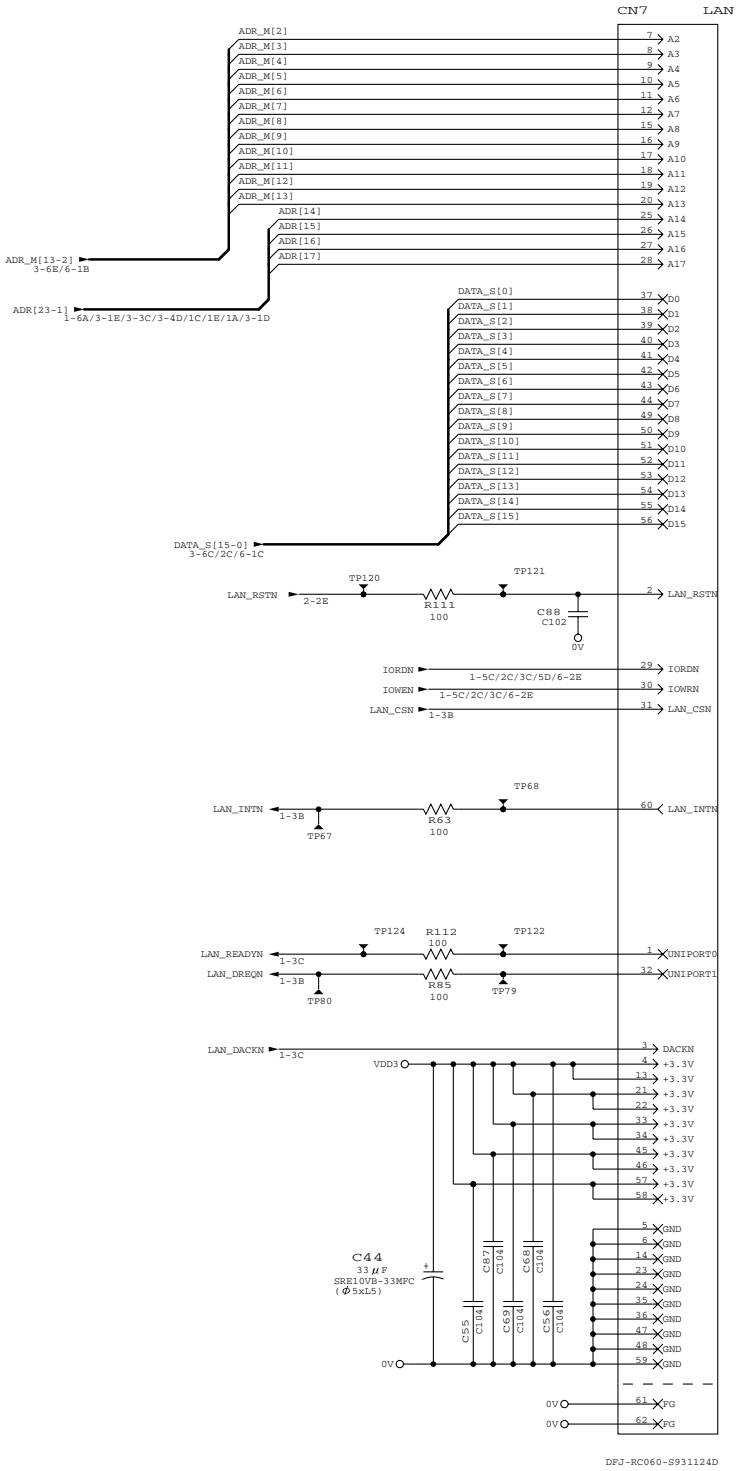

Fig. 3-6

1.3.5 ROM

A 64Mbit ROM (x 16bit) is fitted.

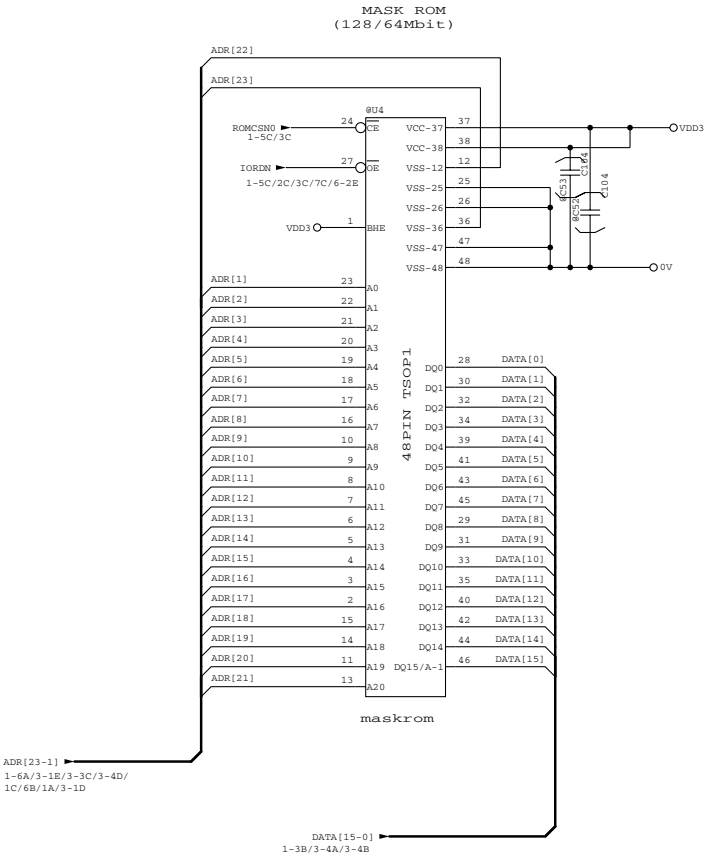

Fig. 3-7

1.3.6 Flash ROM

A 32Mbit flash ROM (x 16bit) is fitted.

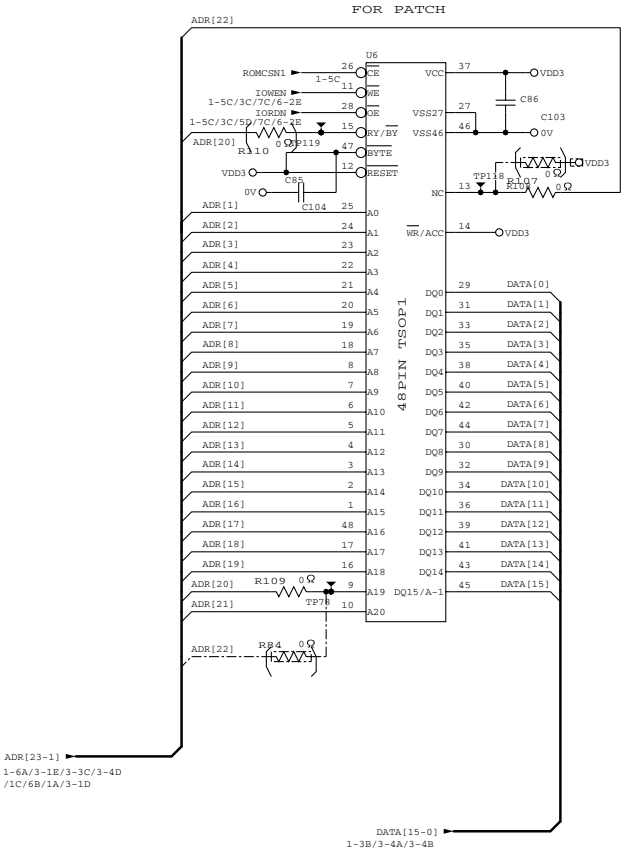

Fig. 3-8

1.3.7 SDRAM

A 256Mbit SDRAM (x 16bit) is used as the RAM.

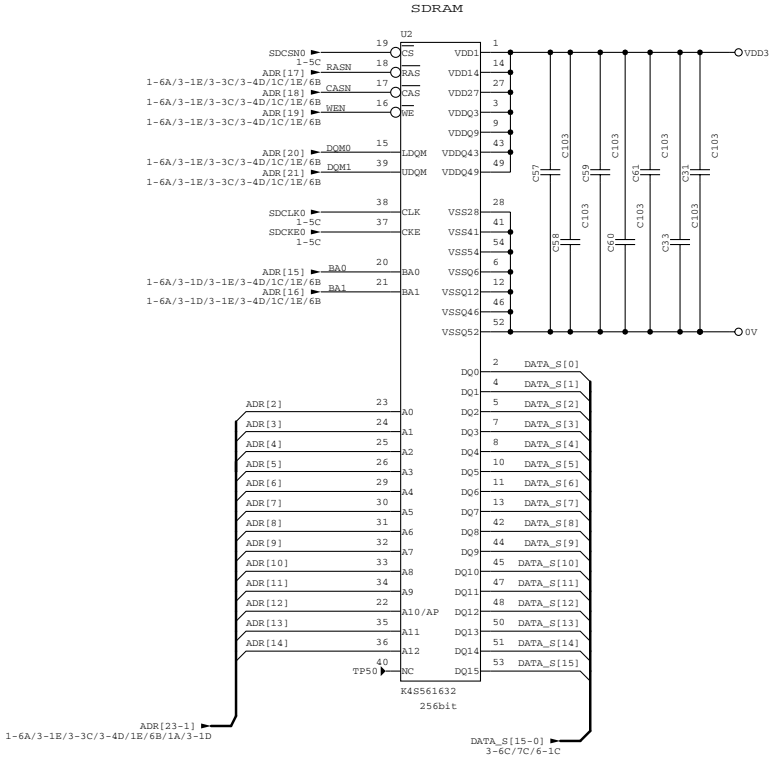

Fig. 3-9

1.3.8 Optional RAM

A 32bit (100 pin) DIMM can be fitted as optional RAM. The main PCB has one slot and the capacity of DIMM can be from 16MB to 128MB.

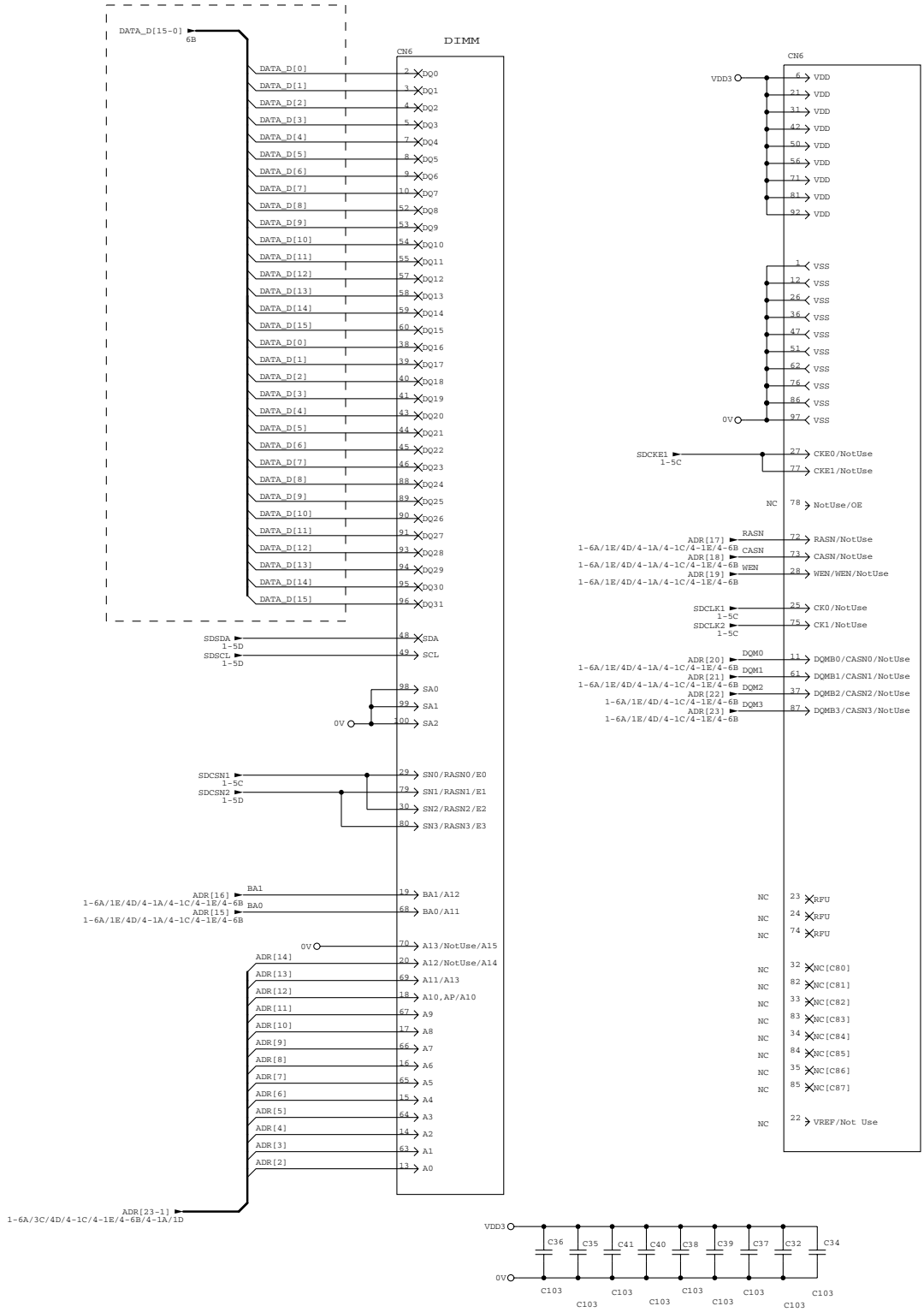

Fig. 3-10

1.3.9 Compact Flash

Compact Flash is controlled by Media GA connected to ASIC. IBM's microdrive is not supported due to it's high actuating current.

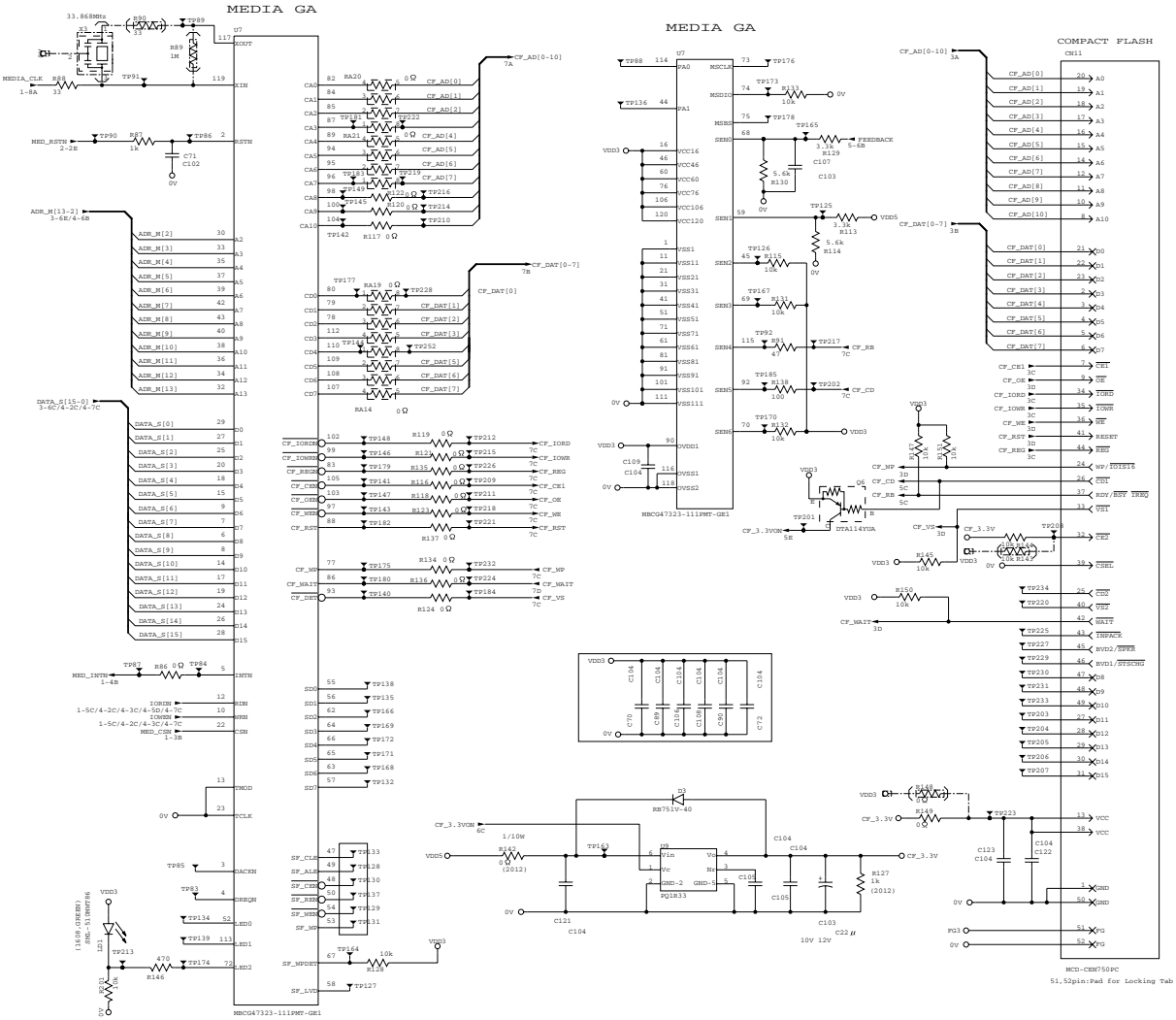

Fig. 3-11

1.3.10 EEPROM

The EEPROM is BR24C16 type of two-wire method with a 2048 x 8bit configuration.

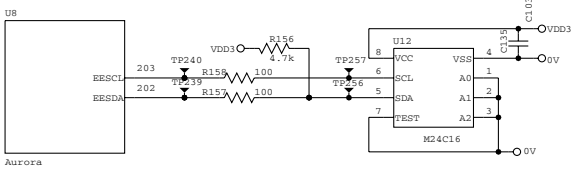

Fig. 3-12

1.3.11 Reset Circuit

The reset IC is a R3112N281C. The reset voltage is 2.8V (typ.) and the LOW period of reset is 22.4ms (typ.)

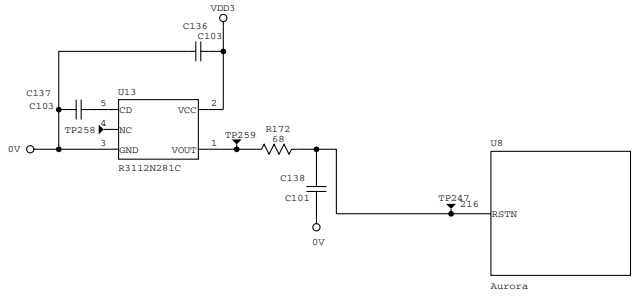

Fig. 3-13

1.3.12 Engine I/O

The interface with the engine PCB is by full-duplex synchronous serial method, of which transfer rate is 520kbps.

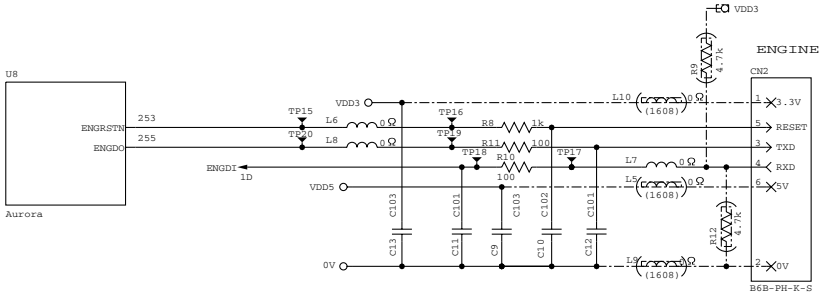

Fig. 3-14

1.3.13 Panel I/O

The interface with the panel PCB is by full-duplex synchronous serial method.

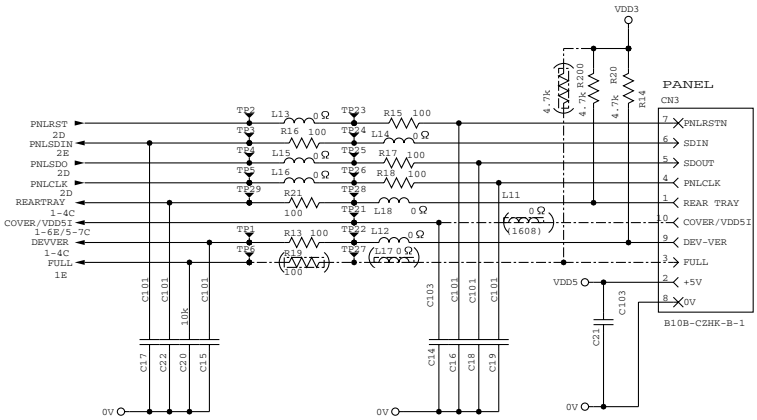

Fig. 3-15

1.3.14 Video I/O

The video signal output from the ASIC is reversed through a transistor and output after being corrected by the buffer IC.

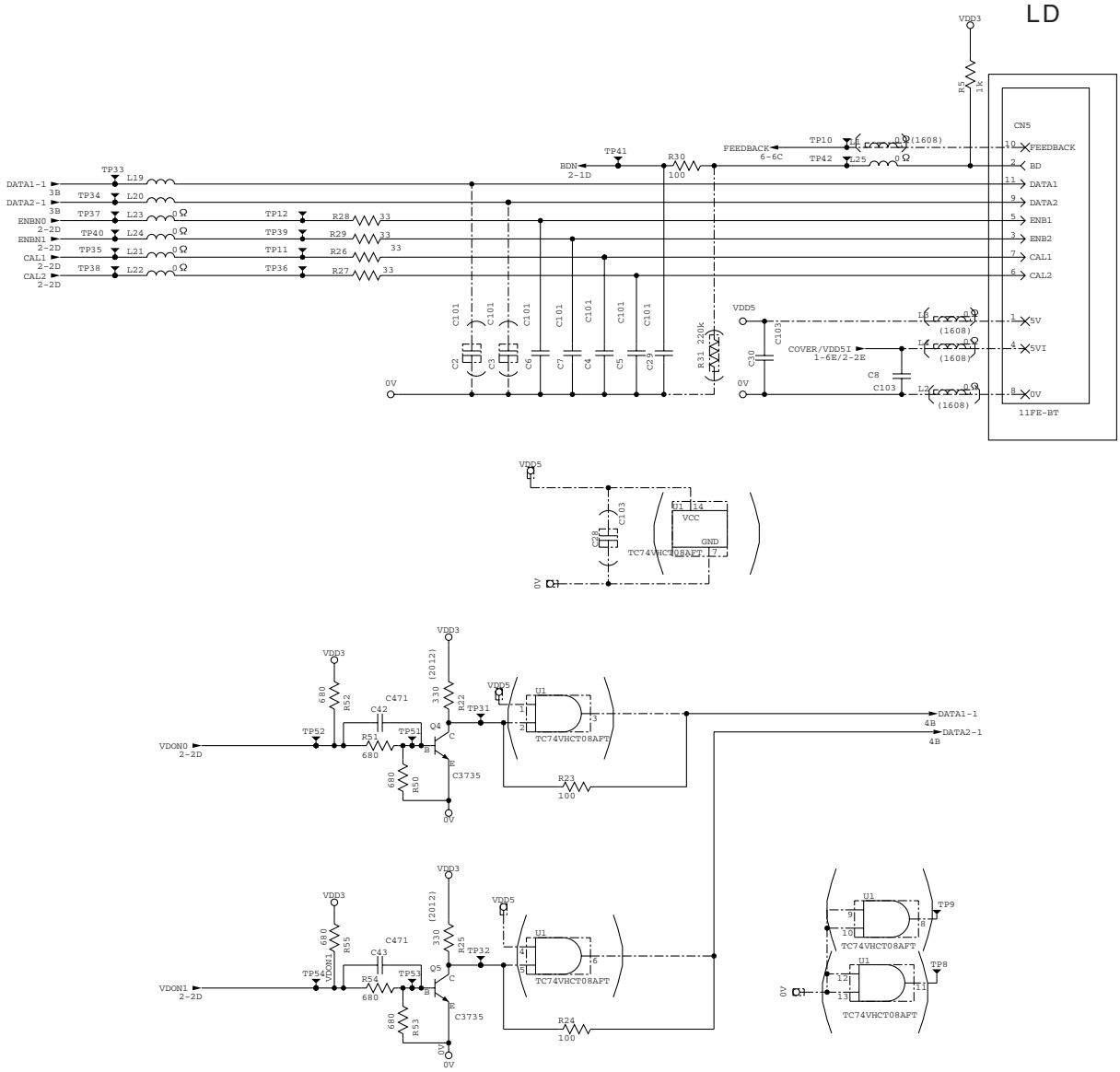

Fig. 3-16

1.3.15 Sensor I/O

Each sensor of Pre-Regist, Regist, T1-PE, Plate, MP-PE, DX-Size, DX-Jam, Rear tray, Front cover, and DEV is connected to ASIC port on the main PC board and to be read with a software.

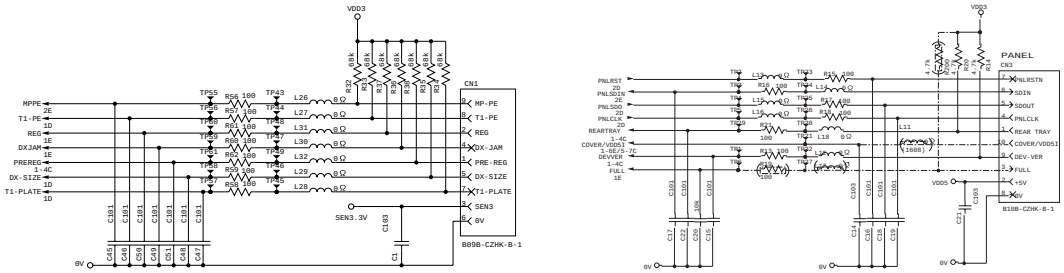

Fig. 3-17

1.3.16 Power Supply

+5V is generated by the 3-pin regulator from astable 8V supplied from the LVPS. +5V is used for the IEEE1284 interface, the LD PCB and the engine PCB. In addition, +1.9V is generated by the 3-pin regulator from 3.3V supplied from the LVPS. +1.9V is used for the CPU within the ASIC and the logic circuit.

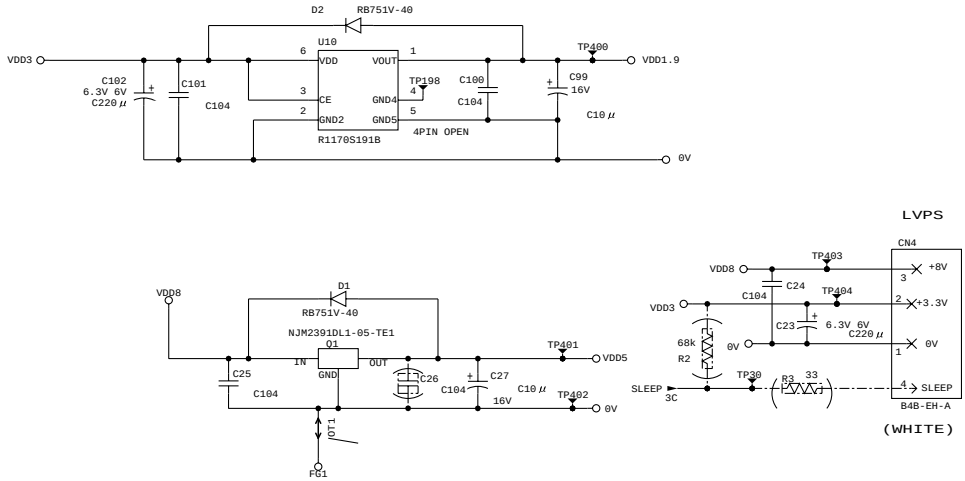

Fig. 3-18

1.4 Engine PCB

The gate array which transforms the serial signal from the main PCB into the parallel signal is mounted on the engine PCB.

The engine PCB controls the following parts by using the transferred signal data;

- Main motor
- Fan motor
- Plate motor
- Thermistor
- Polygon motor
- High-voltage power supply
- Toner sensor
- Heater control
- Lower tray plate sensor
- Solenoid
- Clutch
- Upper tray sensor and paper size sensor
- Lower tray sensor and paper size sensor
- Lower paper PE sensor
- Lower paper exit sensor
- Paper eject sensor (Fixing unit cover sensor)
- Release sensor

For the circuit diagram of the engine PCB, see APPENDIX 11. and 12. 'ENGINE PCB CIRCUIT DIAGRAM' in this manual.

Sensor configuration varies according to machine types.

	HL-6050	HL-6050D/DN
DX-SENSOR	×	○
DX-SOLENOID	×	○

○ : Built-in ×: Not built-in

1.5 Power Supply

1.5.1 Low-voltage power supply

The power supply uses a switching regulation system to generate the regulated DC power (+3.3V, +8V [non regulated] and +24V), which are converted from the AC line.

The regulated output and the production code of each power supply are listed below;

Regulated Output	Production Code
+3.3V / 2.0A +8V / 0.4A +24V / 4.0A	100V: MPS2203 200V: MPS2103

For the circuit diagram of the low-voltage power supply PCB, see APPENDIX 8. or 9. 'LOW-VOLTAGE POWER SUPPLY CIRCUIT DIAGRAM' in this manual.

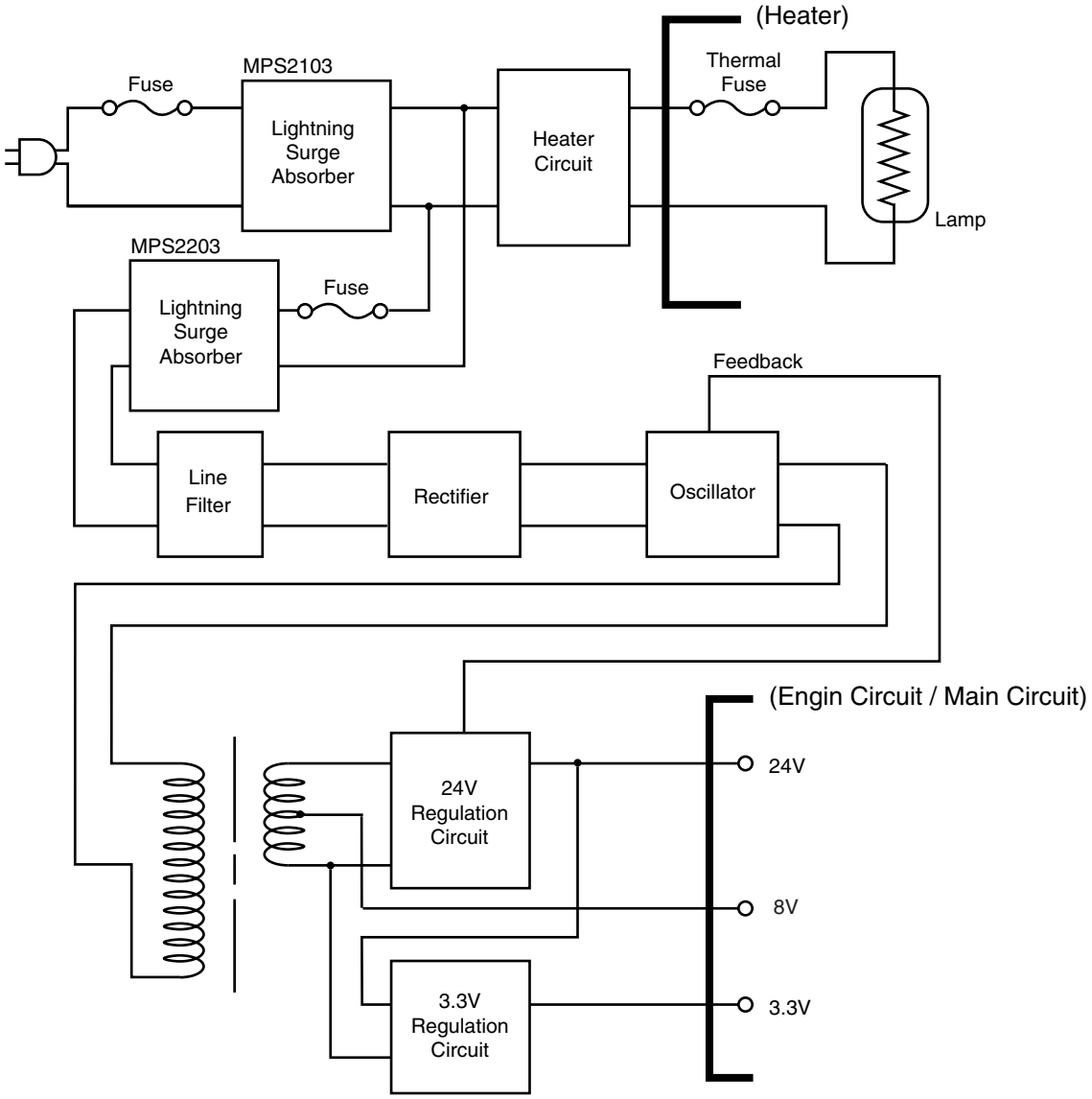

Fig. 3-19

1.5.2 High-voltage power supply

The high-voltage power supply generates and outputs the voltages and currents for the charging, development and transfer functions.

For the circuit diagram of the high-voltage power supply PCB, see APPENDIX 10. 'HIGH-VOLTAGE POWER SUPPLY CIRCUIT DIAGRAM' in this manual.

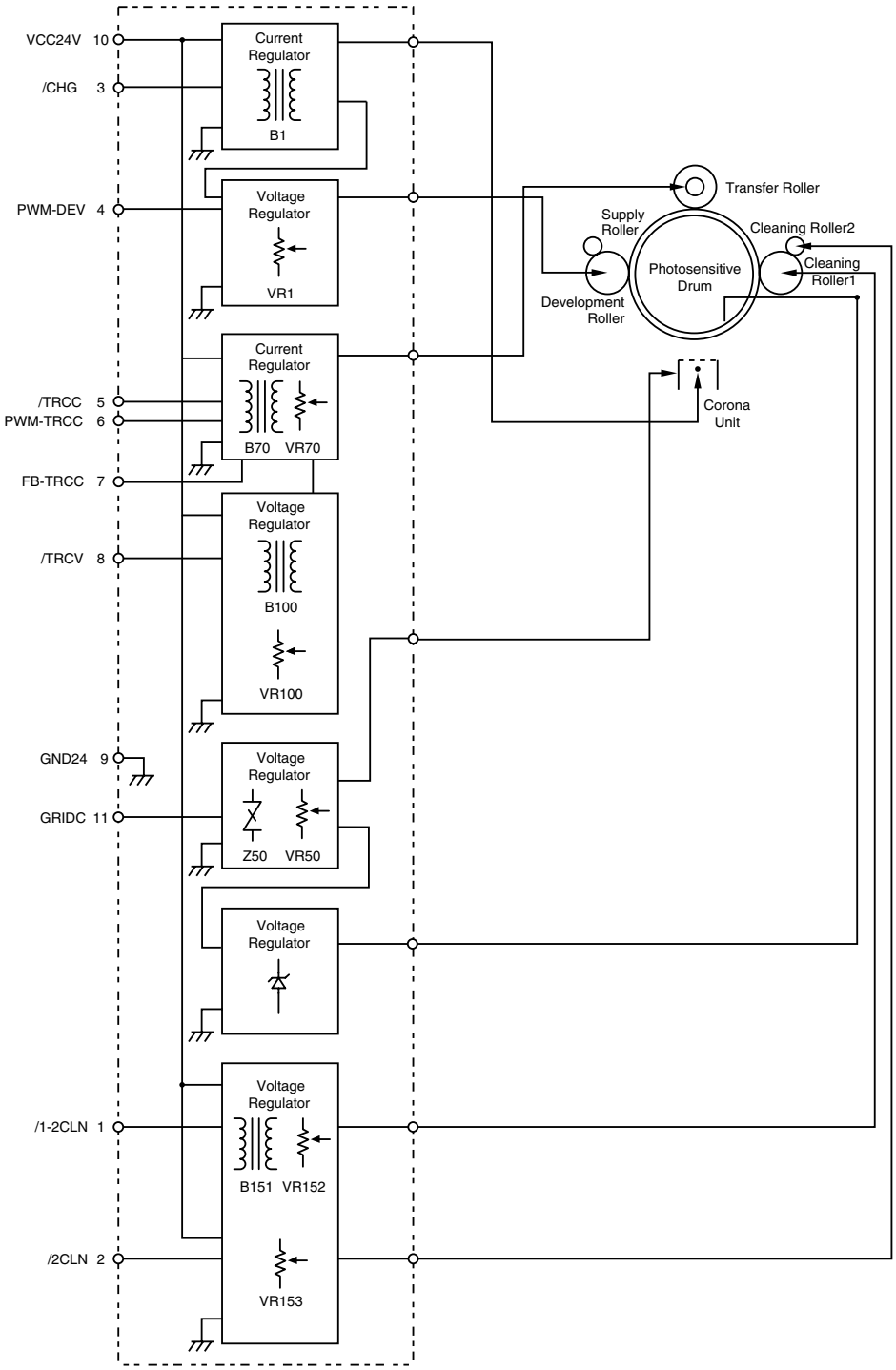

Fig. 3-20

2. MECHANICS

2.1 Overview of Printing Mechanism

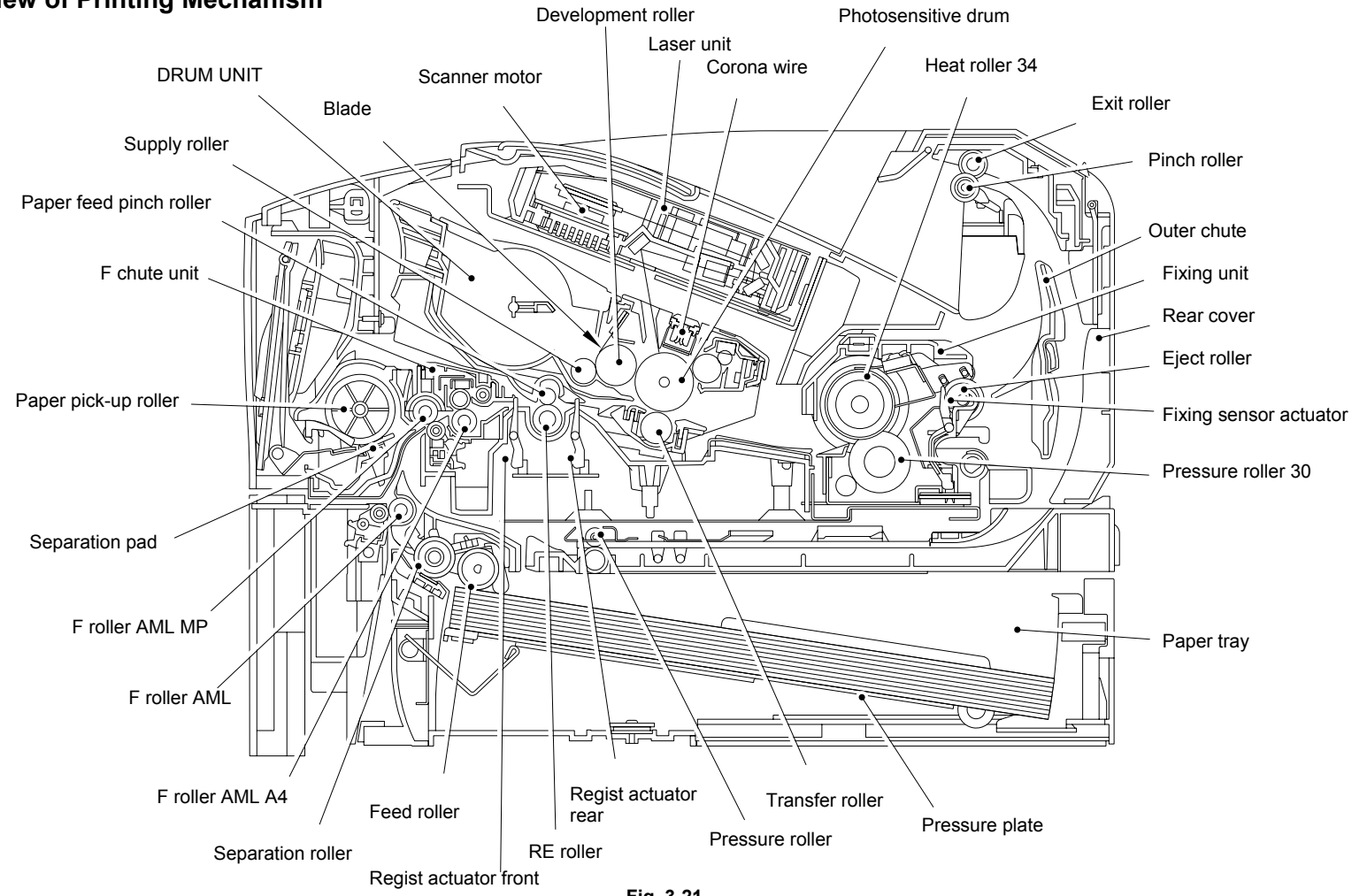

Fig. 3-21

2.2 Paper Transfer

2.2.1 Paper supply

The paper pick-up roller picks up one sheet of paper from the paper tray every time it is rotated and feeds it to the paper feed roller.

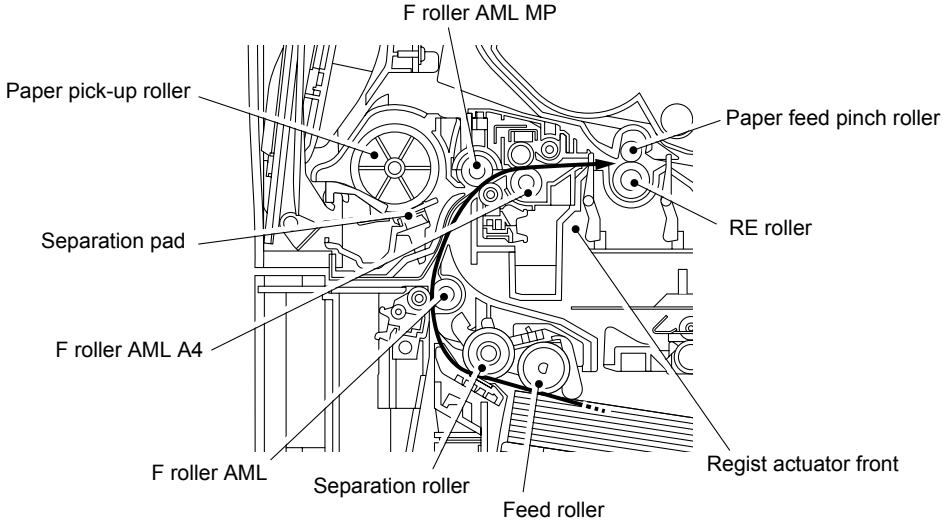

Fig. 3-22

The paper is gripped between the paper pick-up roller and the separation pad and separated into individual sheets.

The pick-up roller is directly connected to the clutch mechanism, whose rotation is stopped by the stopper arm. When the pick-up solenoid is activated, the clutch mechanism is engaged by the solenoid action and the paper pick-up roller is driven. The paper drawn out of the tray by the pick-up roller pushes against the regist front actuator and the paper top position/absence of paper is detected by sensing the motion of the actuator.

2.2.2 Paper tray lift function

To improve the paper feeding function for the paper tray, the pressure plate in the paper tray is lift up with a motor.

1 When the paper tray is installed into the machine, the plate motor rotates to lift the pressure plate up.

2 When the pressure plate goes up, the uppermost paper on pressure plate touches the feed roller.

3 The positioning sensor will be ON when the feed roller is pushed up, stopping the plate motor rotating, as well as the pressure plate.

4 When paper is fed and the pressure plate has less paper, the feed roller goes down and the positioning sensor will be OFF. In the situation above, the plate motor rotates to lift the pressure plate up.

5 After that, the machine repeats from step 2 to 4.

2.2.3 Paper particle remover unit

HL-6050 series printer has a paper particle remover unit to remove paper particles (dust) from the surface of the paper, thus minimizing any paper particles (dust) in the drum.

A. When the paper is fed from the paper tray:

1. Paper particles generated by friction between the separation pad and the paper feed roller, are removed by the pinch roller of the paper tray.
2. Paper particles removed by the pinch roller are gathered to the dust collecting space of the paper tray.
3. Paper particles generated at the paper feeding path and the paper feed roller are removed by the pinch roller A4 which comes into contact with throughout the printing area.
4. The removed paper particles are moved to the left and right hand side by means of spiral roller which is located near the pinch roller A4, then they are stored in the dust collecting space of the paper tray.

B. When the paper is fed from the MP tray:

1. Paper particles generated by friction between the separation pad and the paper feed roller, are removed by the pinch roller which is located near the F roller AML MP.
2. Paper particles removed by the pinch roller are gathered to the dust collecting space of the paper tray.
3. Paper particles generated at the paper feeding path are removed by the pinch roller A4 which comes into contact with throughout the printing area.
4. The removed paper particles are moved to the left and right hand side by means of spiral roller which is located near the pinch roller A4, then they are stored in the dust collecting space of the paper tray.

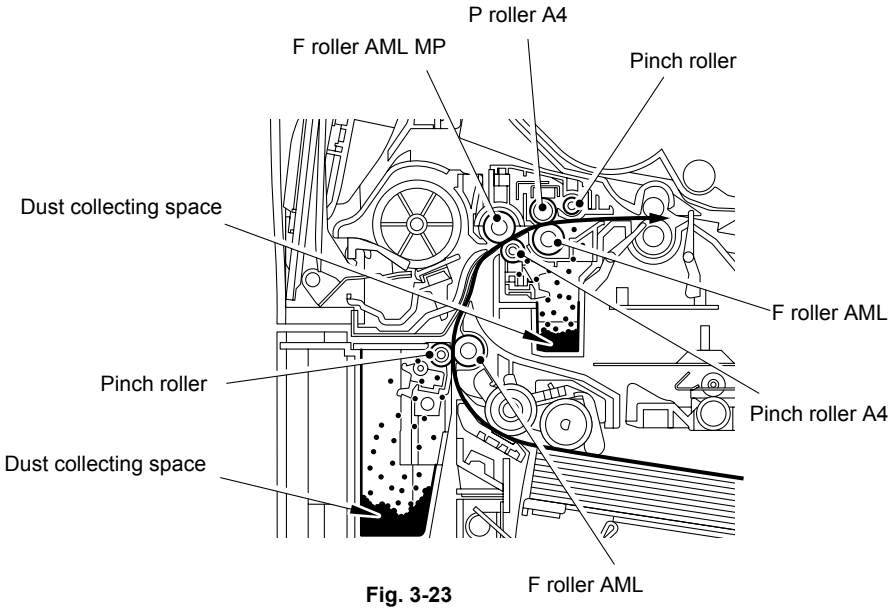

Fig. 3-23

2.2.4 Paper registration

After the paper top position is detected by the regist front actuator, the paper, separated into individual sheets by the paper pick-up roller, is fed further for a specified time, and the paper top position reaches the paper feed roller so that the paper skew is adjusted. Then, the solenoid is turned off, the paper feed roller starts turning, and the paper is fed to the transfer block in the drum unit.

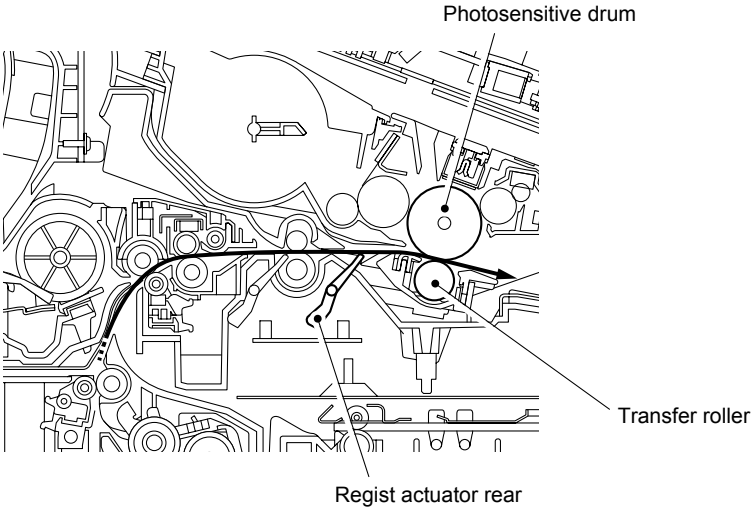

Fig. 3-24

The regist rear actuator in the path from the feed roller to the transfer roller controls the first print position on the paper.

2.2.5 Paper eject

After the printing image on the photosensitive drum is transferred onto the paper, the paper is fed to the fixing unit to fix unfixed toner onto the paper.

Afterwards, the paper is ejected from the fixing unit by the first eject roller in the fixing unit. The paper eject actuator detects whether the paper is ejected correctly or not.

After the paper exits from the first eject roller, the paper is turned by the rear cover and ejected face down into the top output tray through the second eject roller. If the rear cover is open, the paper is ejected face up straight to the printer rear (straight paper path).

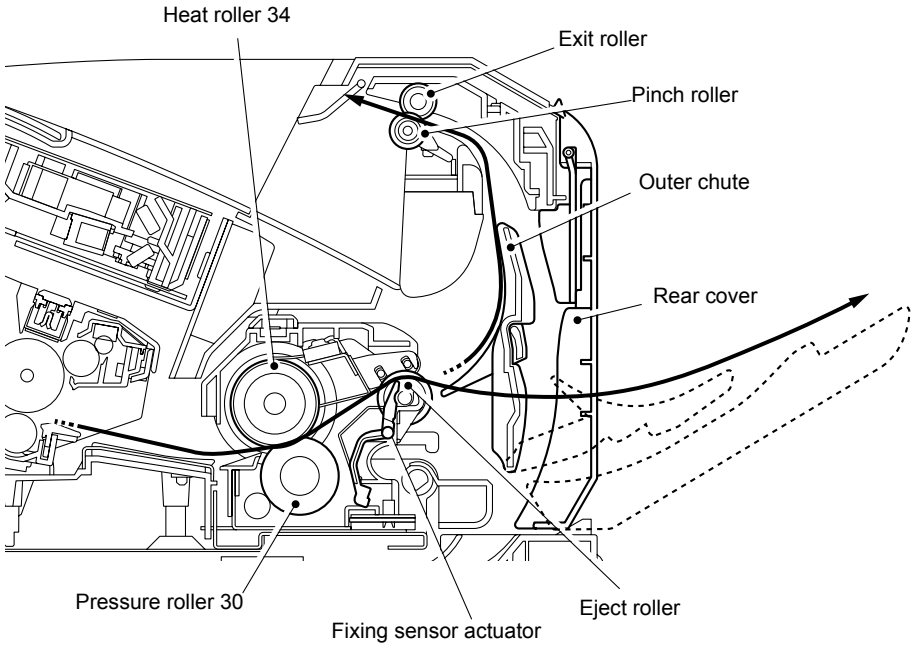

Fig. 3-25

2.2.6 Duplex printing (HL-6050D/6050DN only)

After the paper exits from the second eject roller with the front of sheet printed, the second eject roller rotates conversely and feeds the paper to the duplex tray, where the paper skew is adjusted.

Afterwards, the paper is ejected from the duplex tray to the path through the paper feed roller and the transfer roller to the transfer block in the drum unit again for process of printing on the back of sheet.

2.3 Sensors

2.3.1 Document cover sensor

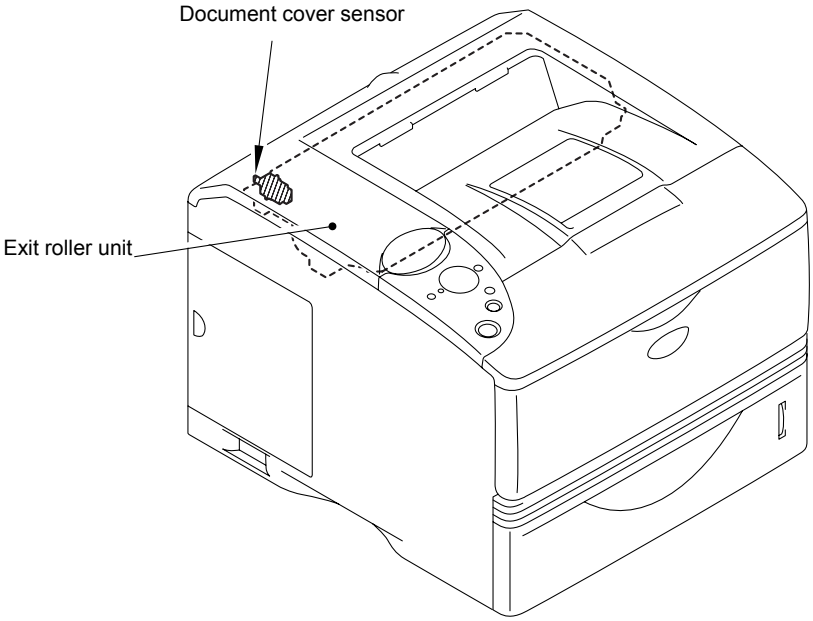

Fig. 3-26

2.3.2 Fixing sensor PCB ASSY

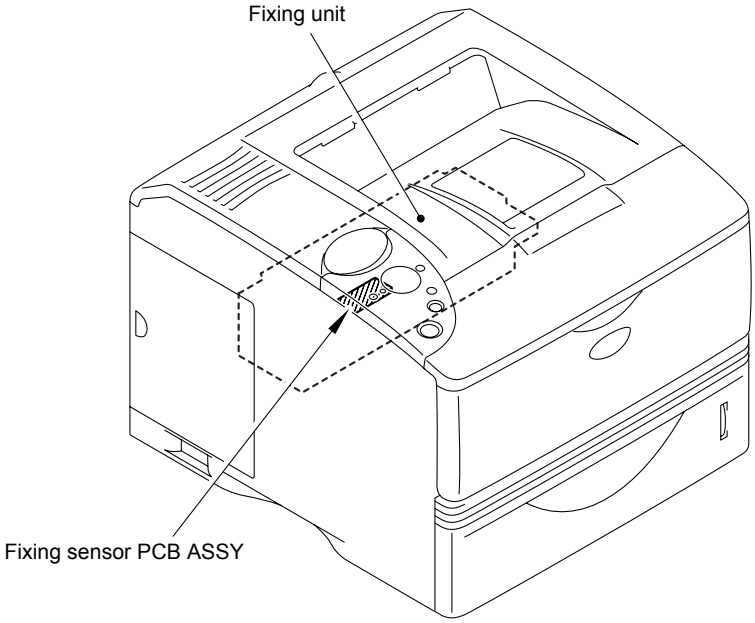

Fig. 3-27

2.3.3 Photo interrupter

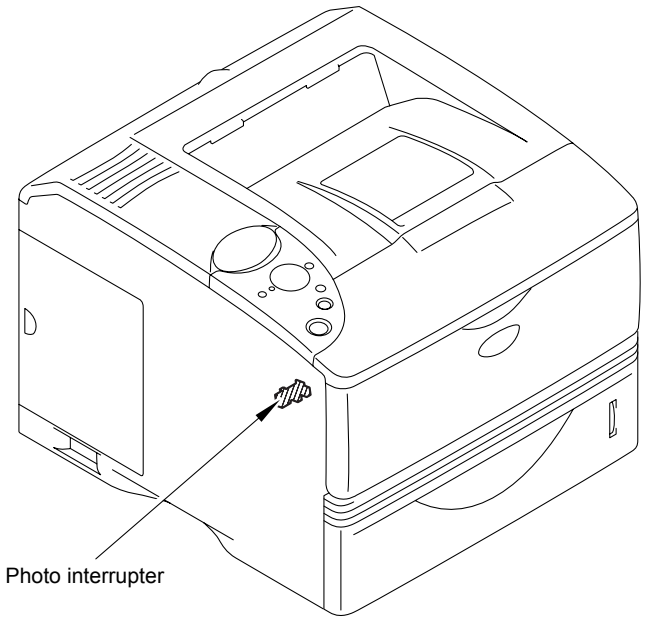

Fig. 3-28

2.3.4 Toner sensor PCB unit / Toner LED PCB ASSY

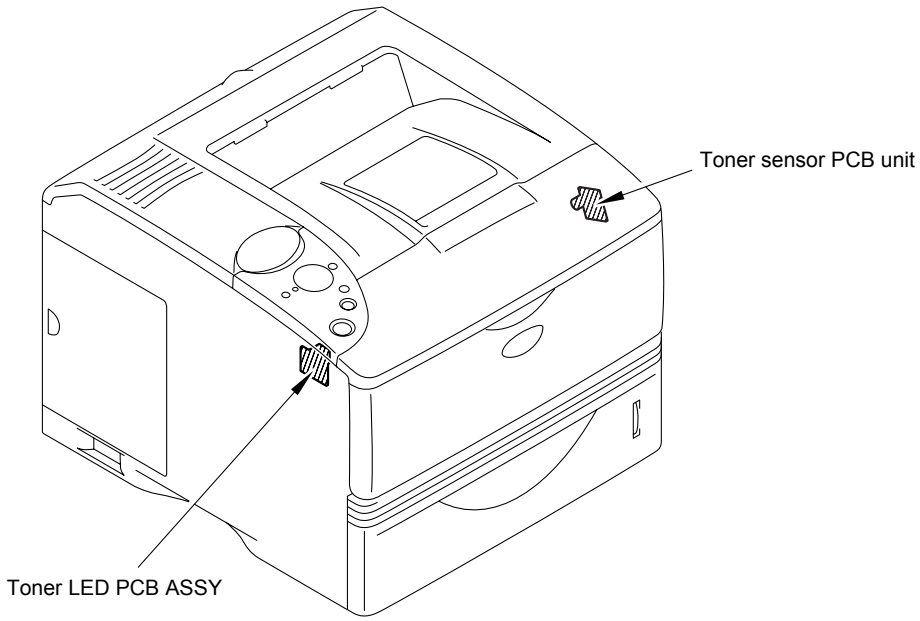

Fig. 3-29

2.3.5 Relay PCB unit

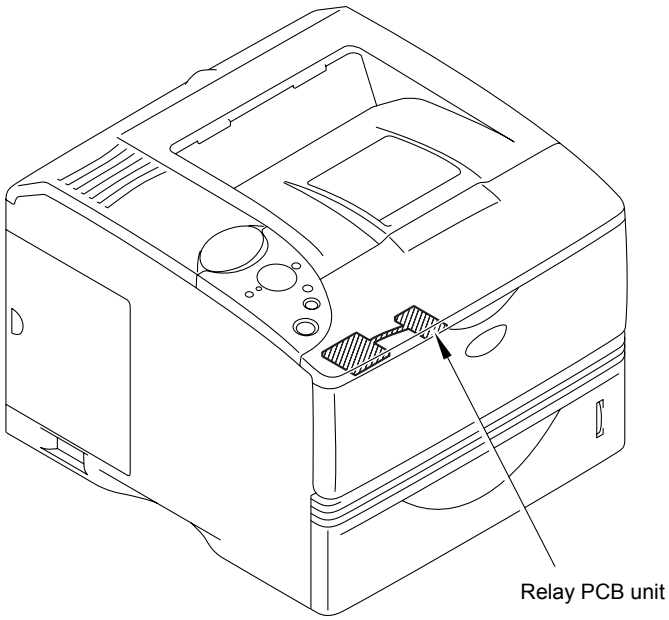

Fig. 3-30

2.3.6 PE/PO sensor PCB ASSY

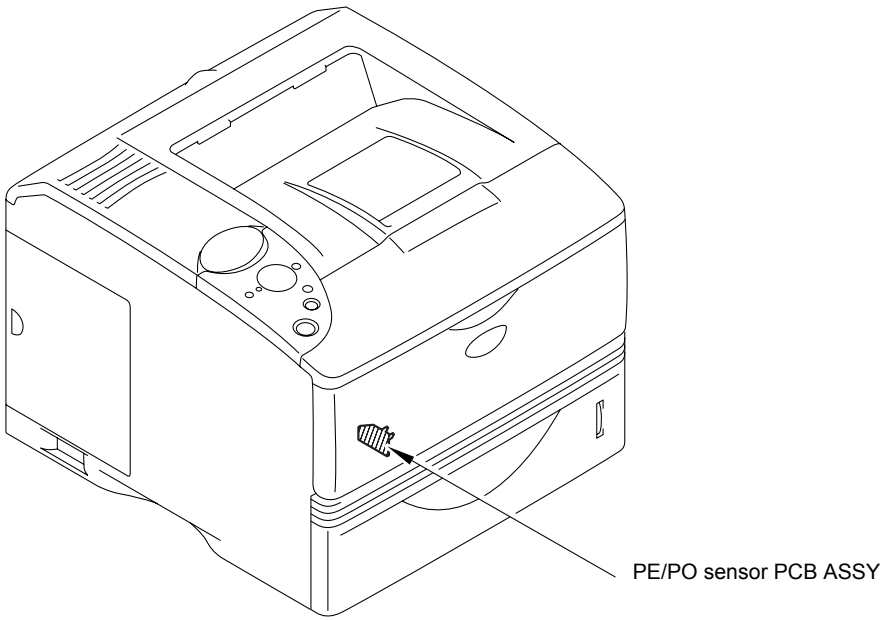

Fig. 3-31

2.3.7 DEV sensor ASSY

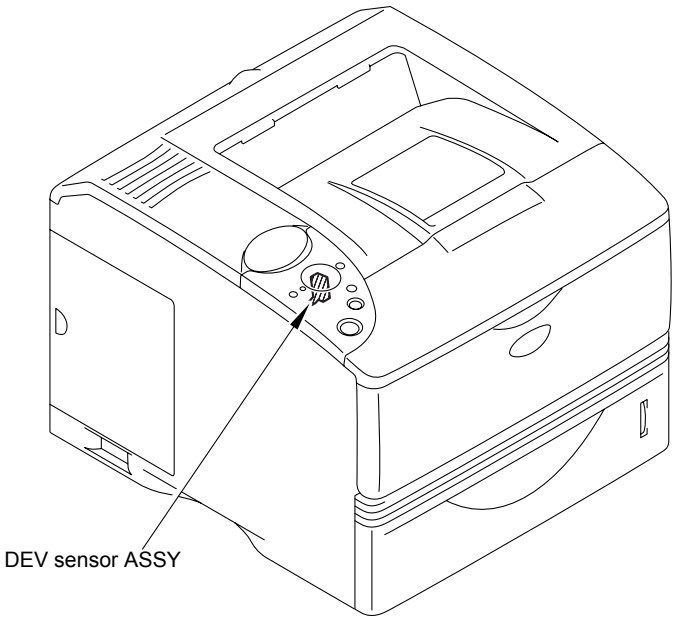

Fig. 3-32

2.3.8 MP sensor PCB ASSY

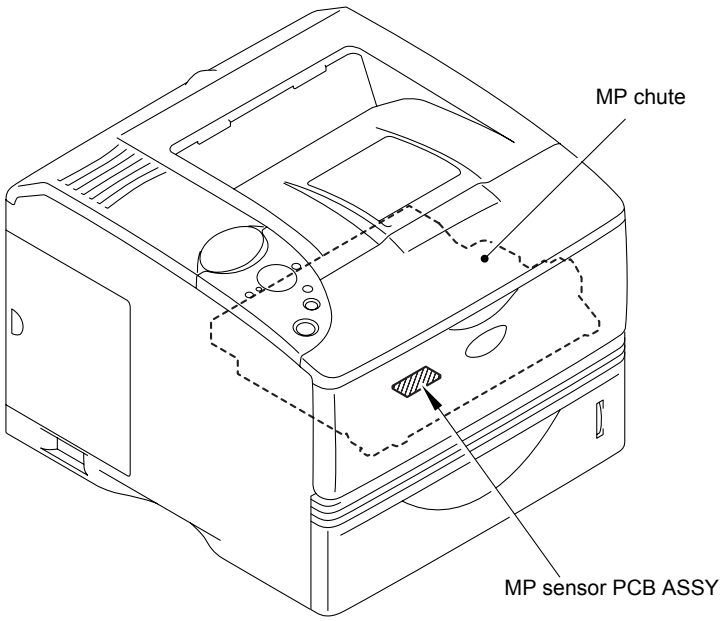

Fig. 3-33

2.4 Drum Unit

2.4.1 Photosensitive drum

Generates the latent electrostatic image and develops the image on the drum surface.

2.4.2 Primary charger

Forms a uniform charge on the drum surface.

(1) Corona wire
Generates the ion charge on the drum.

(2) Grid
Spreads the ion charge evenly over the drum surface.

2.4.3 Transfer roller

Transfers the toner image to the paper from the drum surface.

2.4.4 Cleaner

Removes the paper dust or dirt on the surface of the photosensitive drum.

2.5 Toner Cartridge

Develops the electrostatic latent image on the photosensitive drum with toner and forms the visible image.

2.5.1 Toner empty mode

The life of the toner cartridge is 7,500 pages at the 5% coverage. In the case of low-duty printing, however, “TONER EMPTY” is indicated on the LCD before toner runs out due to wear on the surface of the develop roller and deterioration of toner sealing, inhibiting printing operations. The upper limit of the rotation rate of the develop roller is 27,000 rotations.

The following graph shows the number of printable pages in the case of A4 printing.

Page / job	1	2	3	4	5	6	7	8	9	10	11	12
Cartridge life	9,000	13,500	16,200	18,000	19,286	20,250	21,000	21,600	22,091	22,500	22,846	23.143
Toner empty (5% Coverage)	7,500	7,500	7,500	7,500	7,500	7,500	7,500	7,500	7,500	7,500	7,500	7,500
Toner empty (4% Coverage)	9,375	9,375	9,375	9,375	9,375	9,375	9,375	9,375	9,375	9,375	9,375	9,375
Toner empty (3% Coverage)	12,500	12,500	12,500	12,500	12,500	12,500	12,500	12,500	12,500	12,500	12,500	12,500
Toner empty (2% Coverage)	18,750	18,750	18,750	18,750	18,750	18,750	18,750	18,750	18,750	18,750	18,750	18,750
Toner empty (1% Coverage)	37,500	37,500	37,500	37,500	37,500	37,500	37,500	37,500	37,500	37,500	37,500	37,500

*Toner cartridge life = 6.0a x 9000 / (2.45 x (a-1) + 6.0)

a: Page / job

*Toner empty = 7500 x 5 / b

b: Coverage (%)

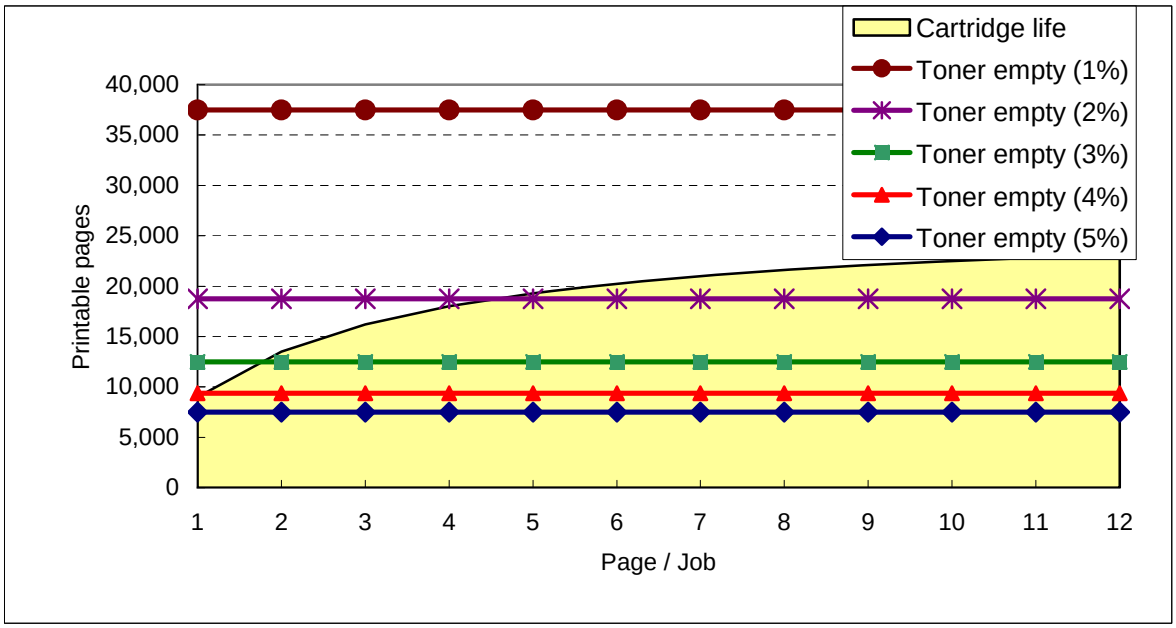

Most of all customers print higher than 3 pages / job and 3% coverage.

Therefore, it won’t be a problem, even if the toner cartridge life is stopped at 27,000 rotations of the develop roller.

2.5.2 New toner detection boss

To prevent the toner leakage and image quality degradation when printing in a low duty, HL-6050 has the function to detect when the new toner is installed.

(If the toner is used beyond its life when printing in low duty, image defect or toner leakage may occur.)

1 Install the toner cartridge (brand-new) into the drum unit, then install it into the printer.

2 The new toner detection boss of the toner cartridge touches the actuator.

3 The sensor on the machine detects if it is a brand-new toner cartridge.

4 The new toner detection boss moves to the “used toner position” when the printer is used once.

When a used toner is installed in the step 1, the toner detection boss does not touch the machine actuator in the step 2. Therefore, the sensor on the machine will be OFF in the step 3.

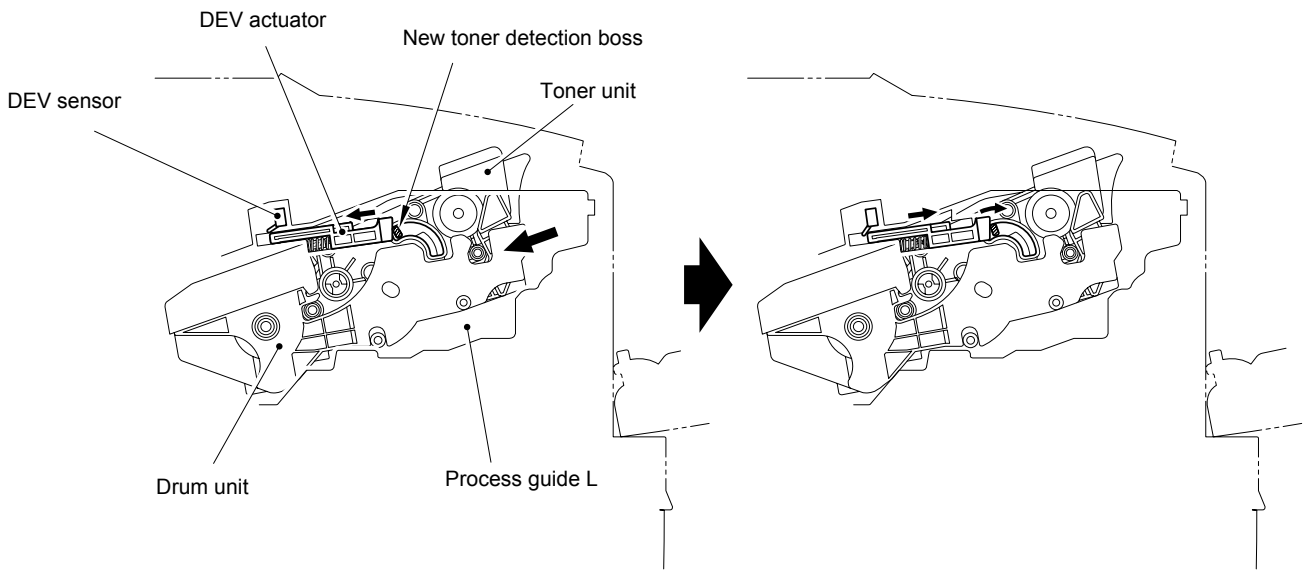

Fig.3-34

2.6 Print Process

2.6.1 Charging

The drum is charged to approximately 870V by an ion charge which is generated by the primary charger. The charge is generated by ionization of the corona wire, which has a DC bias from the high-voltage power supply applied to it. The flow of the ion charge is controlled by the grid to ensure it is distributed evenly on the drum surface. The aluminum drum sleeve in the photosensitive drum is grounded.

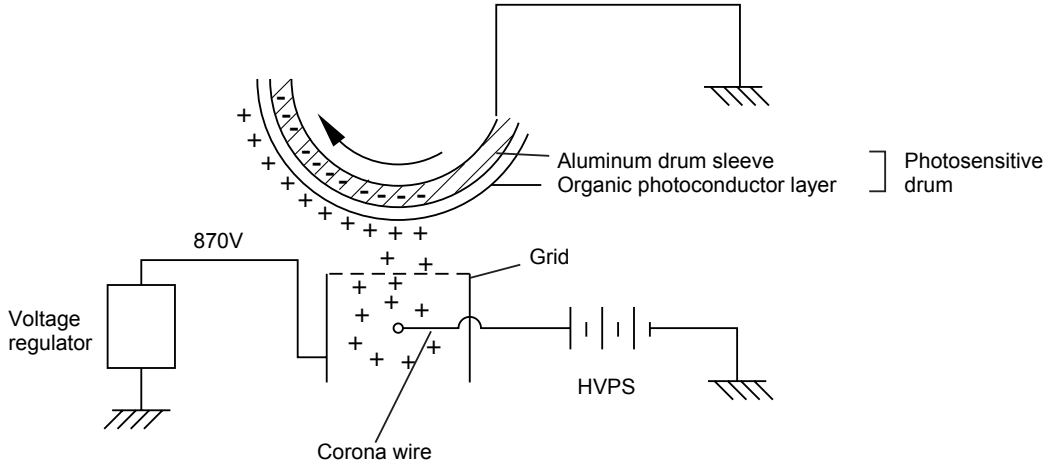

Fig. 3-35

The primary charge uses a corona wire, but since the drum is positively charged, only less than 1/10 of the usual quantity of ozone is generated compared with the negatively charged drum. The level of ozone expelled from the printer is therefore not harmful to the human body. Applicable safety standards have been complied with.

2.6.2 Exposure stage

After the drum is positively charged, it is exposed to the light emitted from the laser unit.

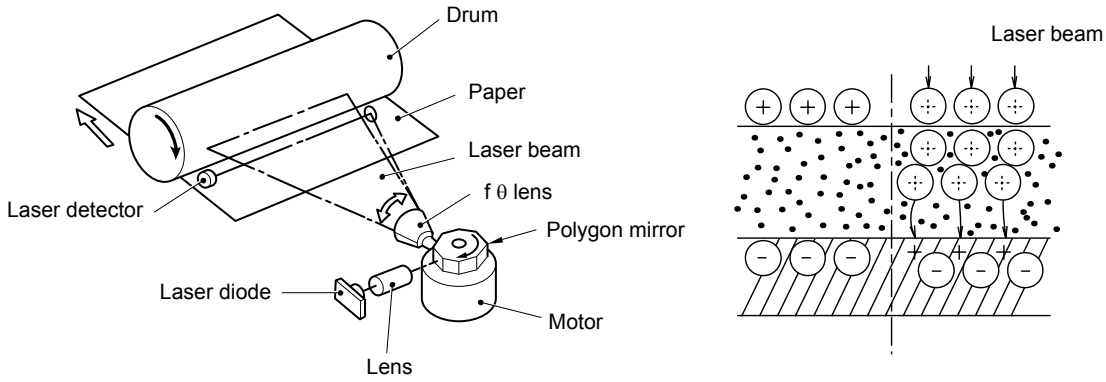

Fig. 3-36

<Laser exposure unit>

The HL-6050 series printer has a twin laser beam unit to get a resolution of 1200 dpi x 1200 dpi at full-speed printing (A4/LETTER: 24/25 ppm).

1. The two laser beams radiated from a laser diode inside the laser unit are concentrated into a constant width by a slit in the CO lens cell and then reflected by a polygon mirror rotating at high speed.

2. The two laser beams reflected by the polygon mirror are refracted by the theta lens and radiated from the right through to the left end of the reflection mirror as the polygon mirror rotates. At this time, blur of the vertical direction of the laser beam by inclination of a polygon mirror is corrected by passing a CYL lens.
3. The two laser beams reflected by the reflection mirror go straight toward the photosensitive drum below it, then expose the photosensitive drum in two lines.

The area exposed to the laser beam is the image to be printed. The surface potential of the exposed area is reduced, forming the electrostatic image to be printed.

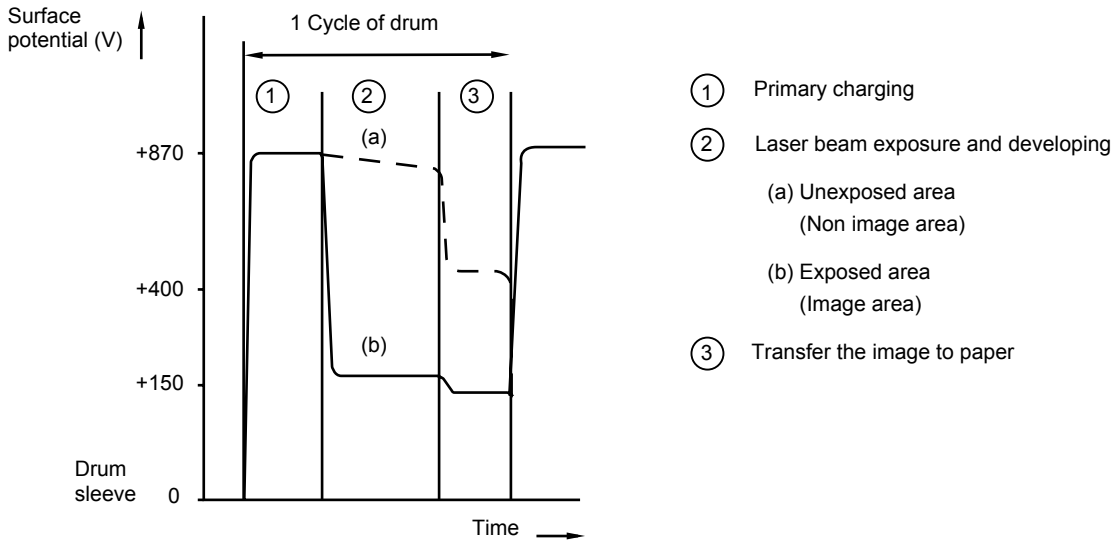

Fig. 3-37

2.6.3 Pressure contact and release unit

HL-6050 series printer has the pressure contact and release unit of the development roller. In order to lengthen the service life of the toner unit, development roller of the toner unit is brought into close contact with the photosensitive drum when necessary.

1. The toner unit is brought into close contact with the drum unit when the paper being fed activates the registration sensor actuator.
2. When the paper exits from the fixing unit and activates the paper exit sensor, the toner unit is released from the drum unit.
3. The toner unit is brought into close contact with the drum unit during the continuous printing. When the job (continuous printing) is finished, the toner unit is released from the drum unit.

2.6.4 Developing

Developing causes the toner to be attracted to the electrostatic image on the drum so as to transform it into a visible image.

The developer consists of a non-magnetic toner. The development roller is made of conductive rubber and the supply roller (which is also made of conductive sponge) rotate against each other. The toner is charged and carried from the supply roller to the development roller. The toner adheres to the development roller and is conveyed to the photosensitive drum at an even thickness controlled by the blade. The toner is nipped between the development roller and the drum and developed onto the latent image on the drum. The electrostatic field between the drum and the development roller, which is DC-biased from the high-voltage power supply, creates the electrostatic potential to attract toner particles from the development roller to the latent image area on the drum surface.

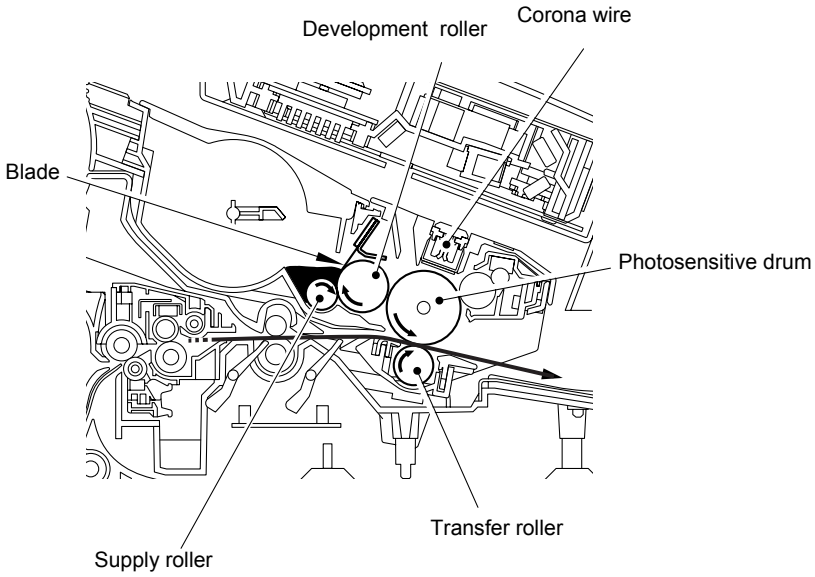

Fig. 3-38

2.6.5 Transfer

(1) Transfer process

After the drum has been charged and exposed, and has received a developed image, the toner formed is transferred onto the paper by applying a negative charge to the back of the paper. The negative charge applied to the paper causes the positively charged toner to leave the drum, and adhere to the paper. As a result, the image is visible on the paper.

(2) Cleaning process of transfer roller

If the toner is not transferred onto the paper perfectly it is possible that there may be residual toner on the drum which will adhere to the transfer roller. The transfer voltage changes to a positive voltage during non-printing rotation of the drum. Therefore the transfer roller is cleaned by returning the positively charged toner adhering to the transfer roller onto the photo-conductive drum.

2.6.6 Fixing stage

The image transferred to the paper by static electricity is fixed by heat and pressure when passing through the heat roller and the pressure roller in the fixing unit. The thermistor keeps the surface temperature of the heat roller constant by detecting the surface temperature of the heat roller and turning on or off the halogen heater lamp.

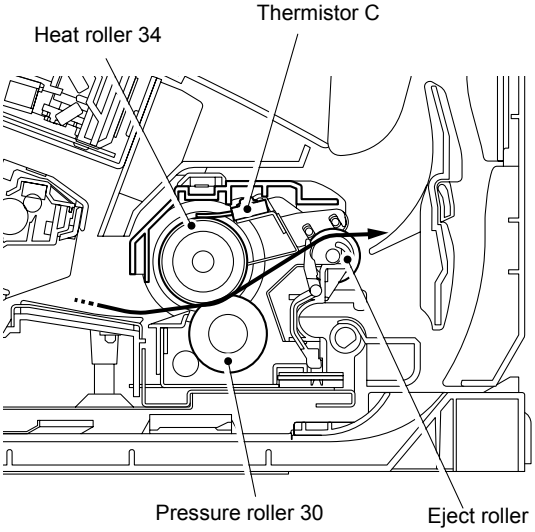

Fig. 3-39

CHAPTER 4 DISASSEMBLY AND RE-ASSEMBLY

1. SAFETY PRECAUTIONS

To avoid creating secondary problems by mishandling, follow the warnings and precautions below during maintenance work.

WARNING

(1) Always turn off the power switch and unplug the power cord from the power outlet before accessing any parts inside the printer.

(2) Some parts inside the printer are extremely hot immediately after the printer is used. When opening the front cover or rear cover to access any parts inside the printer, never touch the red colored parts shown in the following figures.

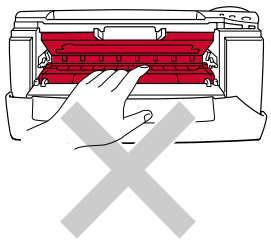

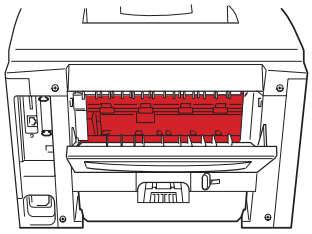

CAUTION:

(1) Be careful not to lose screws, washers, or other parts removed.

(2) Be sure to apply grease to the gears and applicable positions specified in this chapter.

(3) When using soldering irons or other heat-generating tools, take care not to accidentally damage parts such as wires, PCBs and covers.

(4) Static electricity charged in your body may damage electronic parts. When transporting PCBs, be sure to wrap them in conductive sheets.

(5) When replacing the PCB and all the other related parts, put on a grounding wrist band and perform the job on a static mat. Also take care not to touch the conductor sections on the flat cables or on the wire harness.

(6) Be sure to replace self-tapping screws correctly, if removed. Unless otherwise specified, tighten screws to the following torque values.

TAPTITE, BIND or CUP B
M3: 0.7N • m
M4: 0.8N • m
TAPTITE, CUP S
M3: 0.8N • m
SCREW
M3: 0.7N • m
M4: 0.8N • m

(7) After disconnecting flat cables, check that each cable is not damaged at its end or short-circuited.

(8) When connecting flat cables, do not insert them at an angle. After insertion, check that the cables are not at an angle.

(9) When connecting or disconnecting cable connectors, hold the connector body, not the cables. If the connector has a lock, release the connector lock first to release it.

(10) After a repair, check not only the repaired portion but also all connectors. Also check that other related portions are functioning properly before operational checks.

2. DISASSEMBLY FLOW

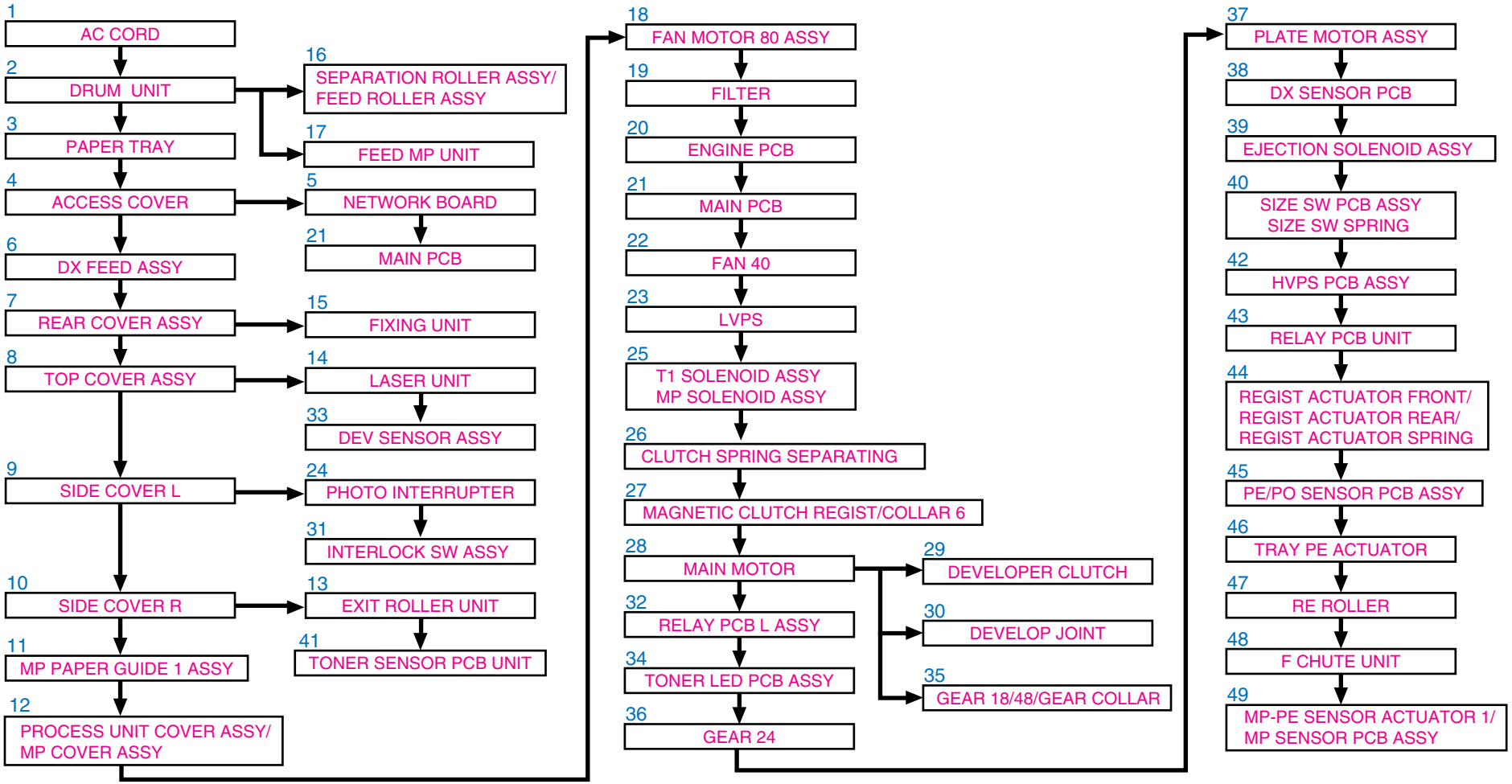

3. DISASSEMBLY PROCEDURE

3.1 AC Cord

(1) Disconnect the AC cord from the printer.

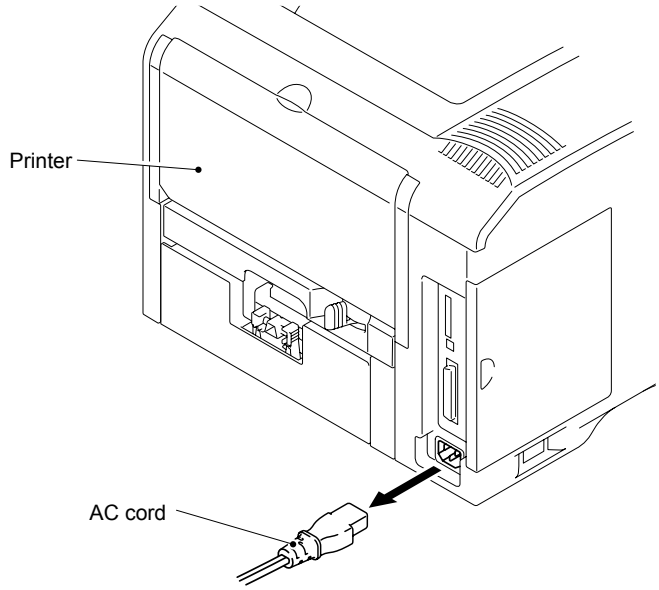

Fig. 4-1

3.2 Drum Unit

(1) Open the process unit cover ASSY and remove the drum unit.

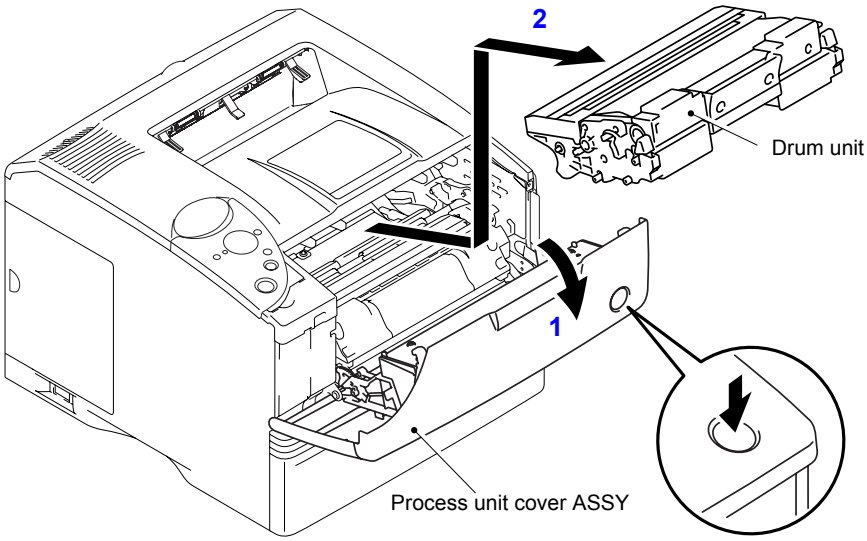

Fig. 4-2

3.3 Paper Tray

(1) Close the process unit cover ASSY and pull out the paper tray.

(2) Remove the paper from the paper tray.

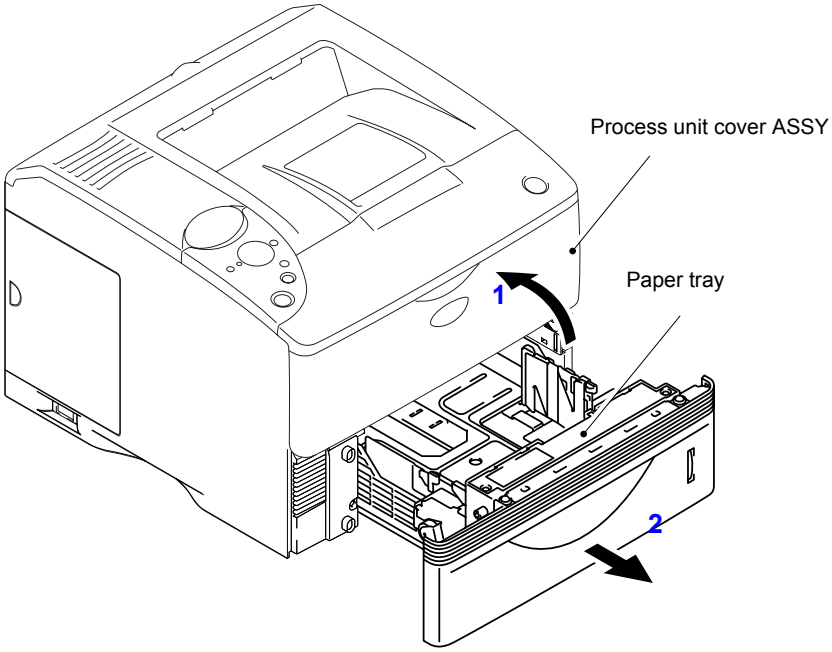

Fig. 4-3

(3) Remove the separation pad ASSY and the separation pad spring from the paper tray.

NOTE:

Be sure not to lose the separation pad spring when you remove the separation pad ASSY.

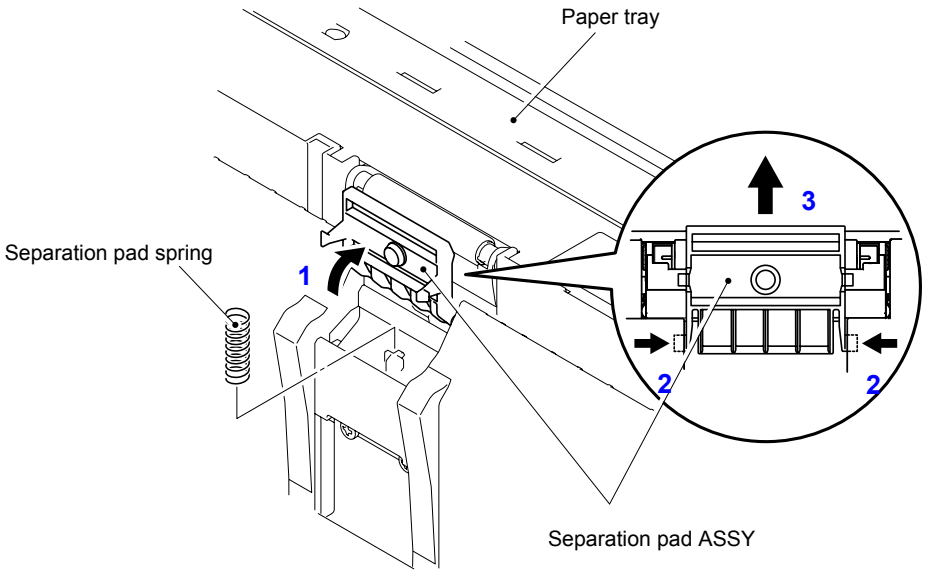

Fig. 4-4

(4) Remove the two cup B M3x8 Taptite screws, and remove the paper tray cover.

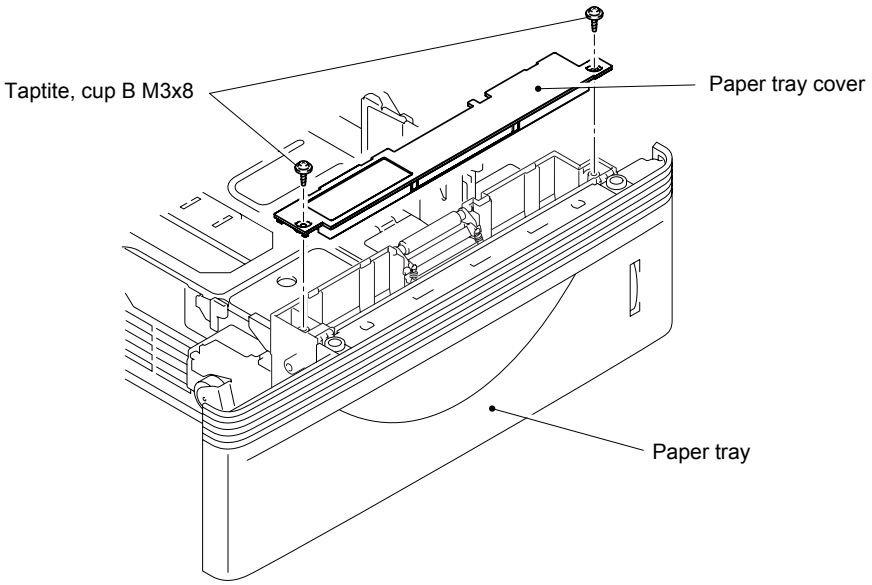

Fig. 4-5

(5) Remove the “A” portion of the roller holder spring.

(6) Remove the P roller unit.

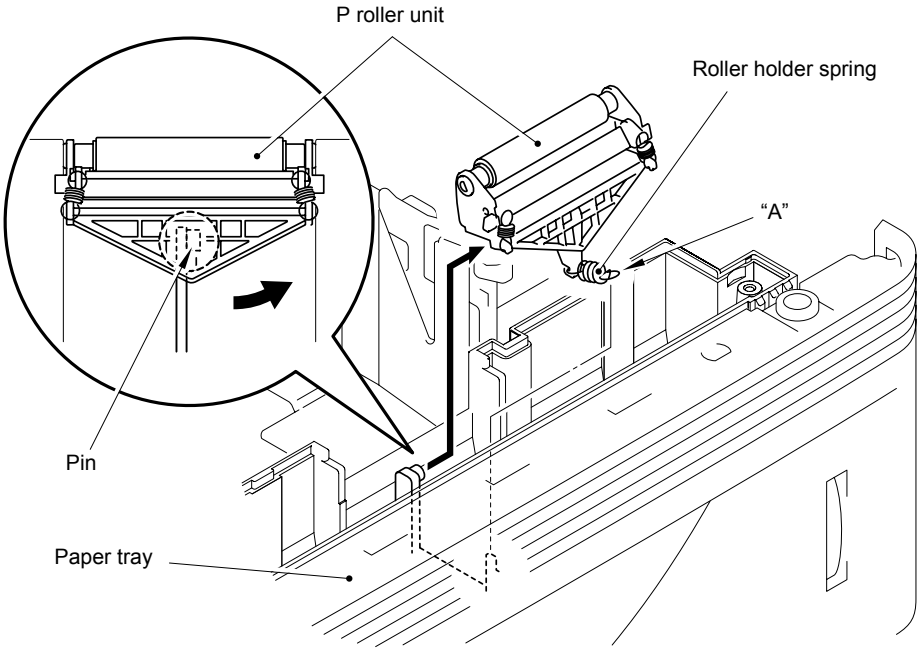

Fig. 4-6

(7) Remove the four bind B M4x10 Taptite screws.

(8) Remove the four hooks with lifting pressure plate, and remove the front tray 1 from the paper tray.

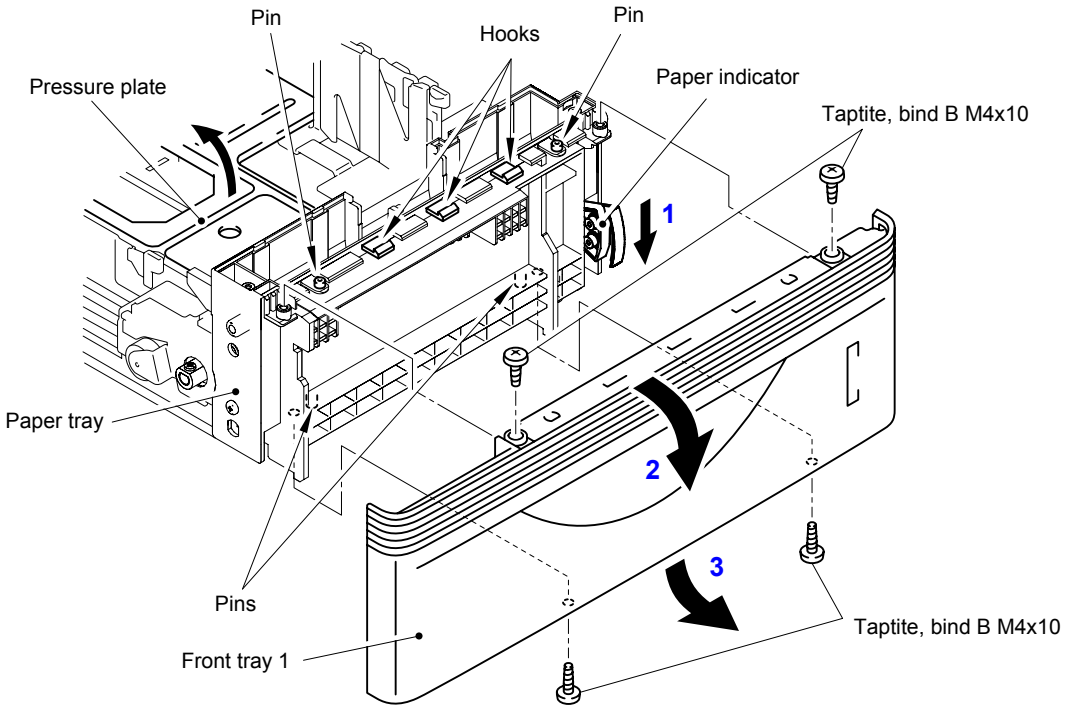

Fig. 4-7

NOTE:

Be sure to hold down the paper indicator when removing the front tray 1. If not, the paper indicator might get damaged.

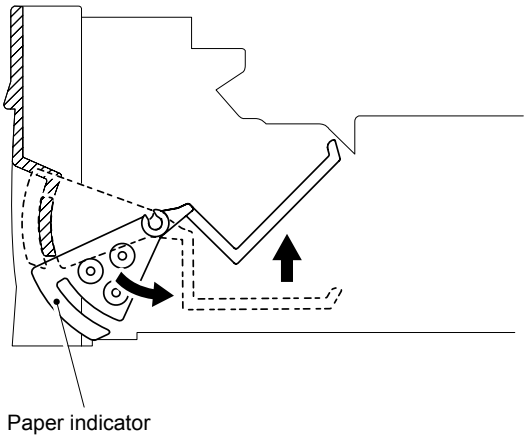

Fig. 4-8

3.4 Access Cover

(1) Remove the access cover.

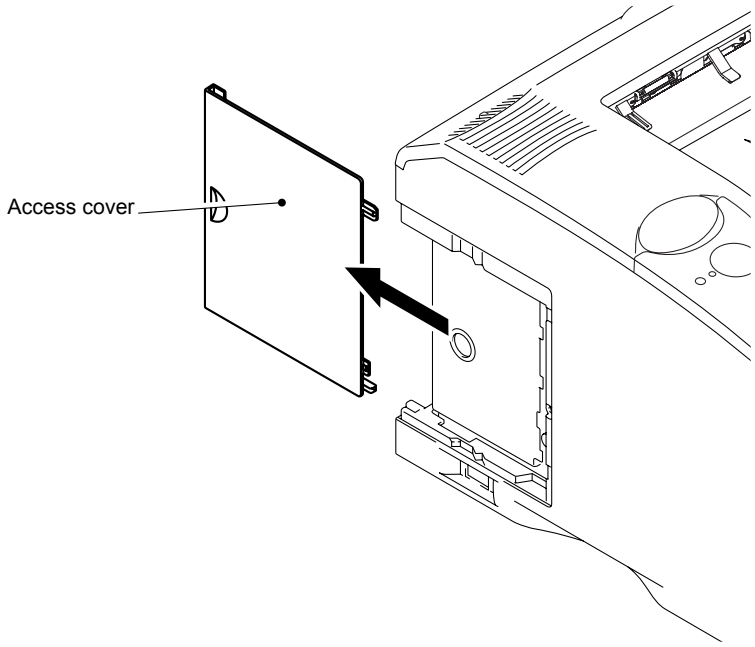

Fig. 4-9

3.5 Network Board

(1) Remove the main PCB access plate.

(2) Loosen the two access cover screws, and remove the network board.

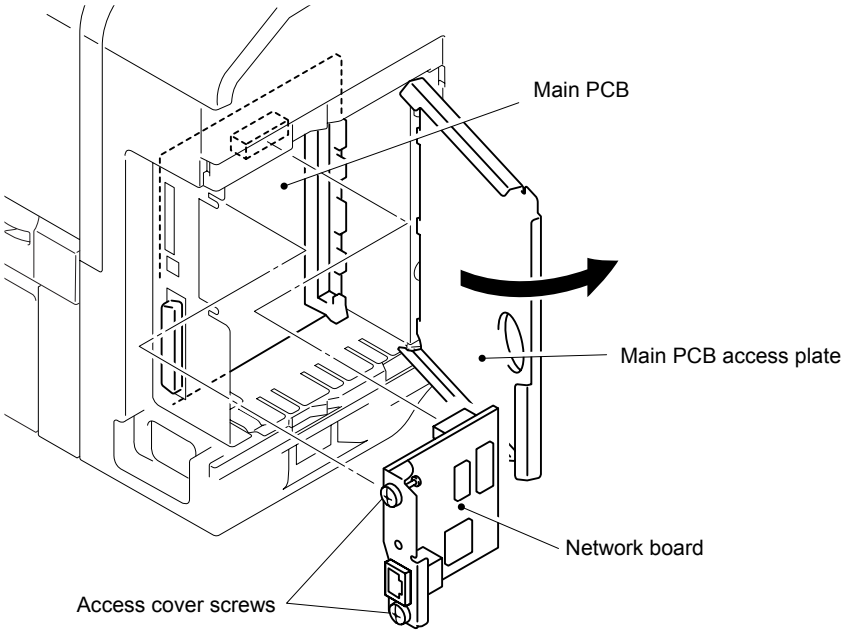

Fig. 4-10

3.6 DX Feed ASSY

(1) Remove the DX feed ASSY from the printer.

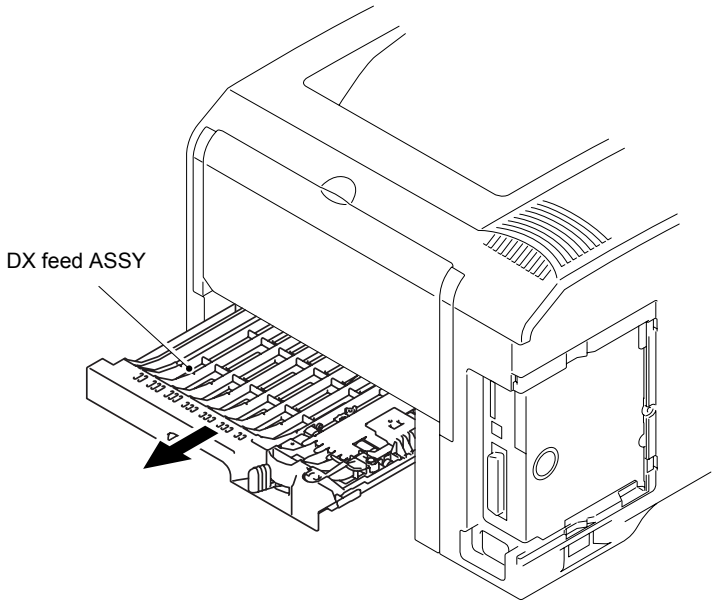

Fig. 4-11

(2) Remove the bind B M3x4 screw, and remove the ground wire cover and ground wire.

(3) Remove the bind B M3x7.5A Taptite shoulder screw and bind B M3x8 Taptite screw, and remove the paper guide upper ASSY.

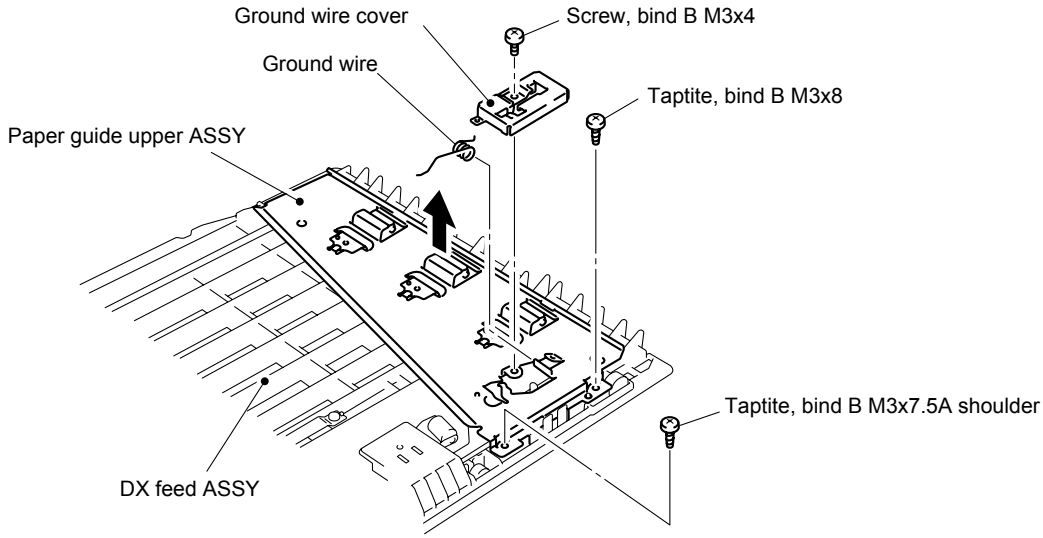

Fig. 4-12

(4) Remove the roller holder from the paper guide upper ASSY HE.

(5) Remove the pressure roller from the roller holder.

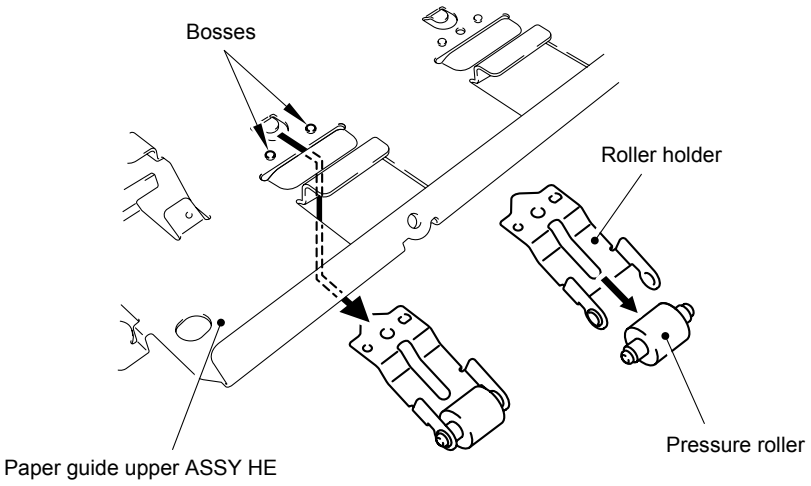

Fig. 4-13

(6) Remove the bind B M3x5 Taptite screw, and remove the side regist roller holder.

(7) Remove the pressure roller from the side regist roller holder.

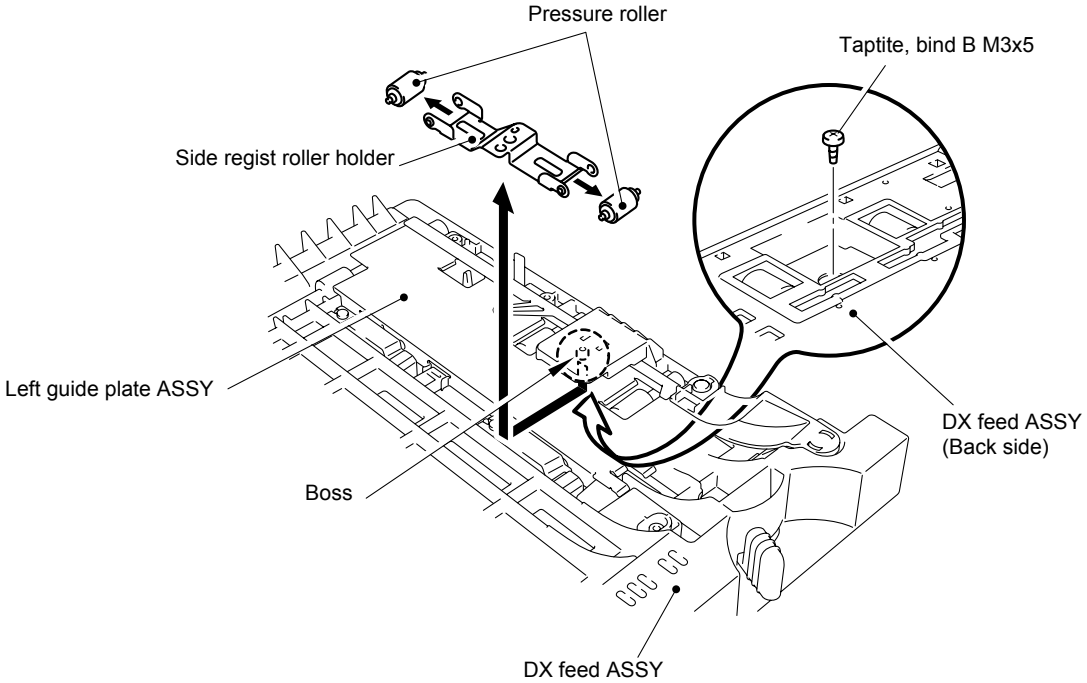

Fig. 4-14

NOTE:
Be sure that both boss and pin are inserted before mounting the side regist roller holder.

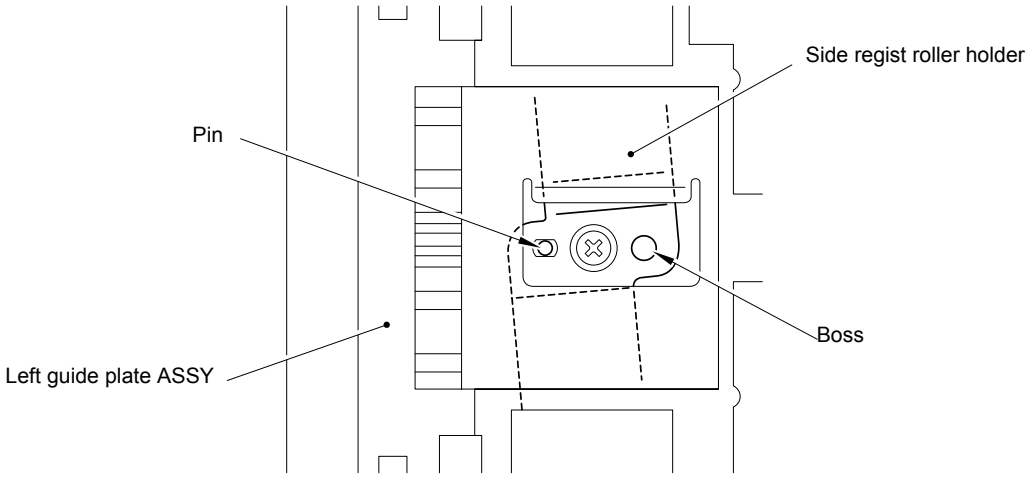

Fig. 4-15

(8) Remove the two bind B M3x8 Taptite screws, and remove the two guide plate stopper.
(9) Remove the two left guide spring 2 from the DX feed ASSY.
(10) Release the hook, and remove the side regist guide.

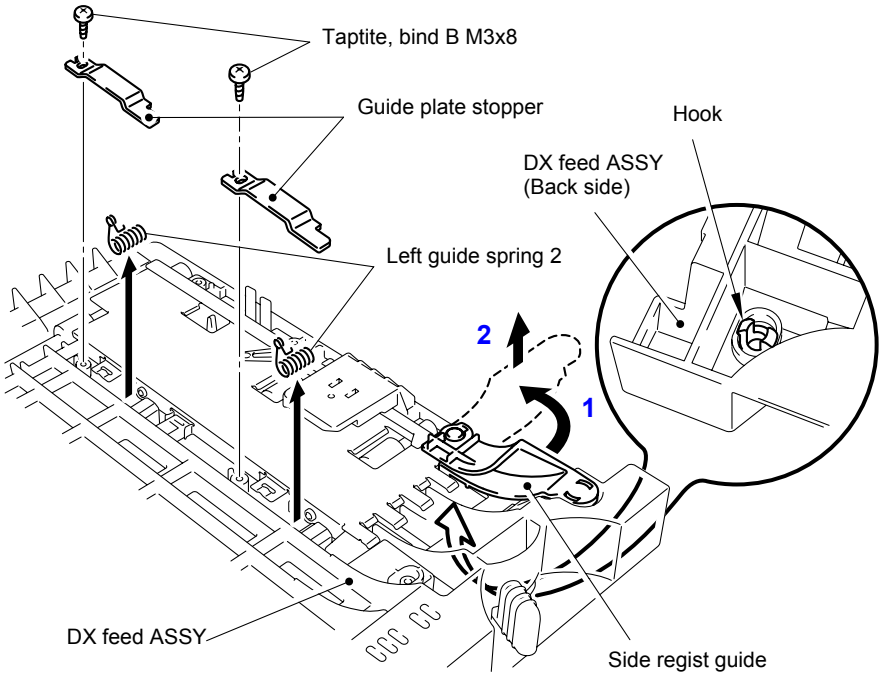

Fig. 4-16

(11) Remove the left guide plate ASSY from the DX feed ASSY.

(12) Remove the drive gear 14 from the DX feed ASSY.

(13) Remove the DX feed roller ASSY from the DX feed ASSY.

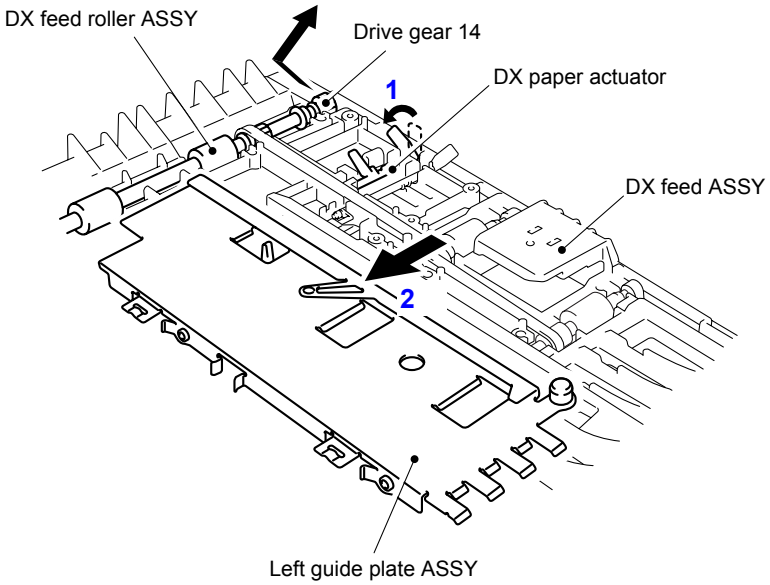

Fig. 4-17

(14) Release the hook from the DX feed ASSY, and remove the DX paper actuator and paper actuator spring.

(15) Release the hook from the DX feed ASSY, and remove the guide actuator and guide actuator spring.

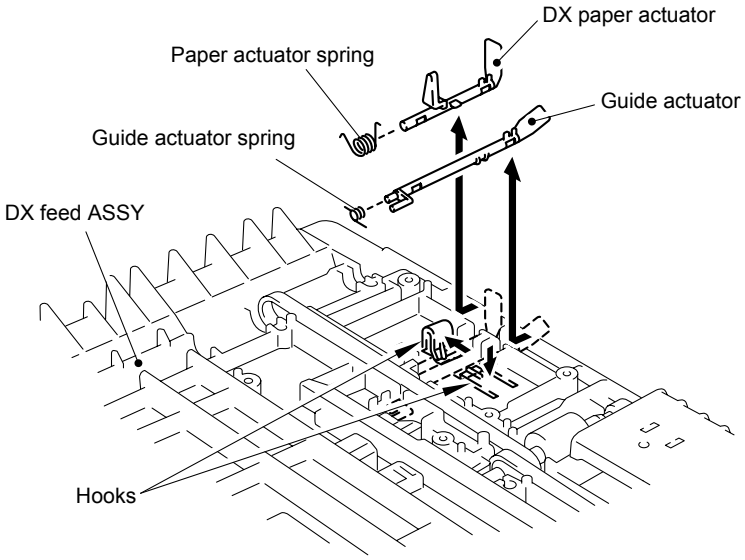

Fig. 4-18

(16) Remove the two side regist roller from the DX feed ASSY.

(17) Remove the T-belt B40S2M142 from the DX feed ASSY.

(18) Remove the T-belt B40S2M224 from the DX feed ASSY.

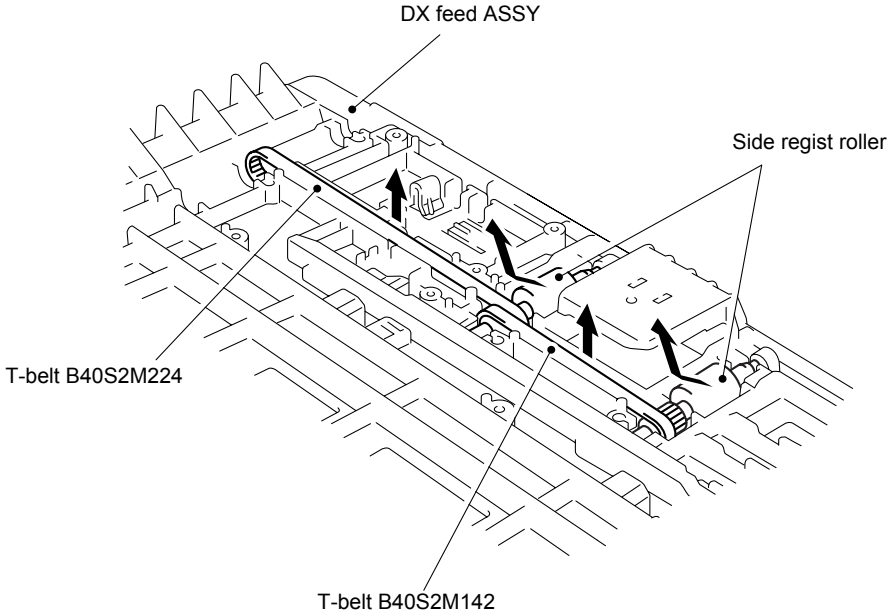

Fig. 4-19

3.7 Rear Cover ASSY

(1) Open the rear tray.

(2) Remove the two shoulder screws, and remove the rear cover ASSY.

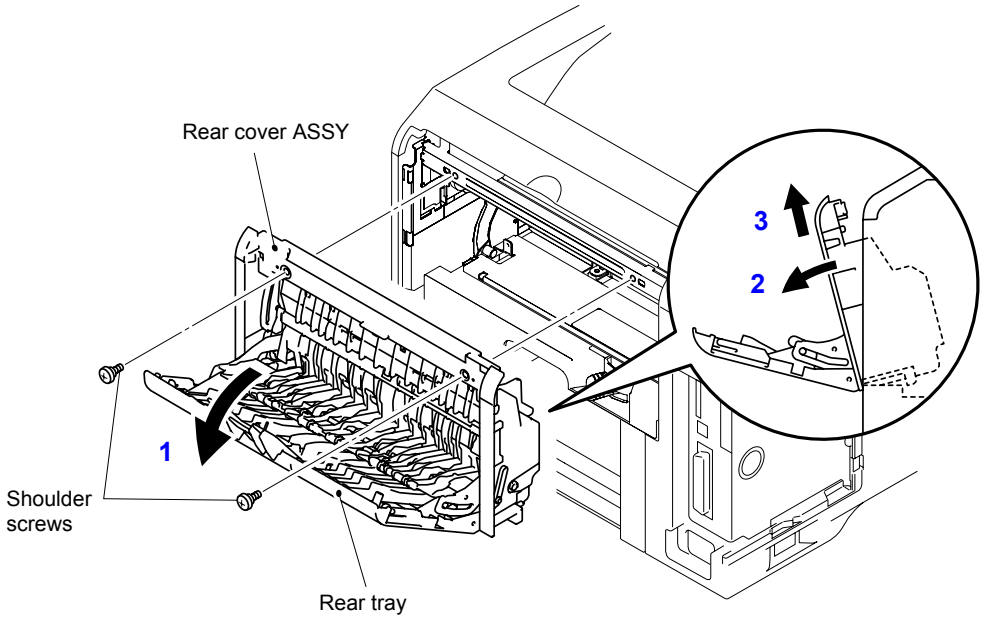

Fig. 4-20

3.8 Top Cover ASSY

(1) Open the process unit cover ASSY.

(2) Remove the two shoulder screws at the front and another two at the rear.

(3) Remove the top cover ASSY as removing the connector of the panel harness ASSY.

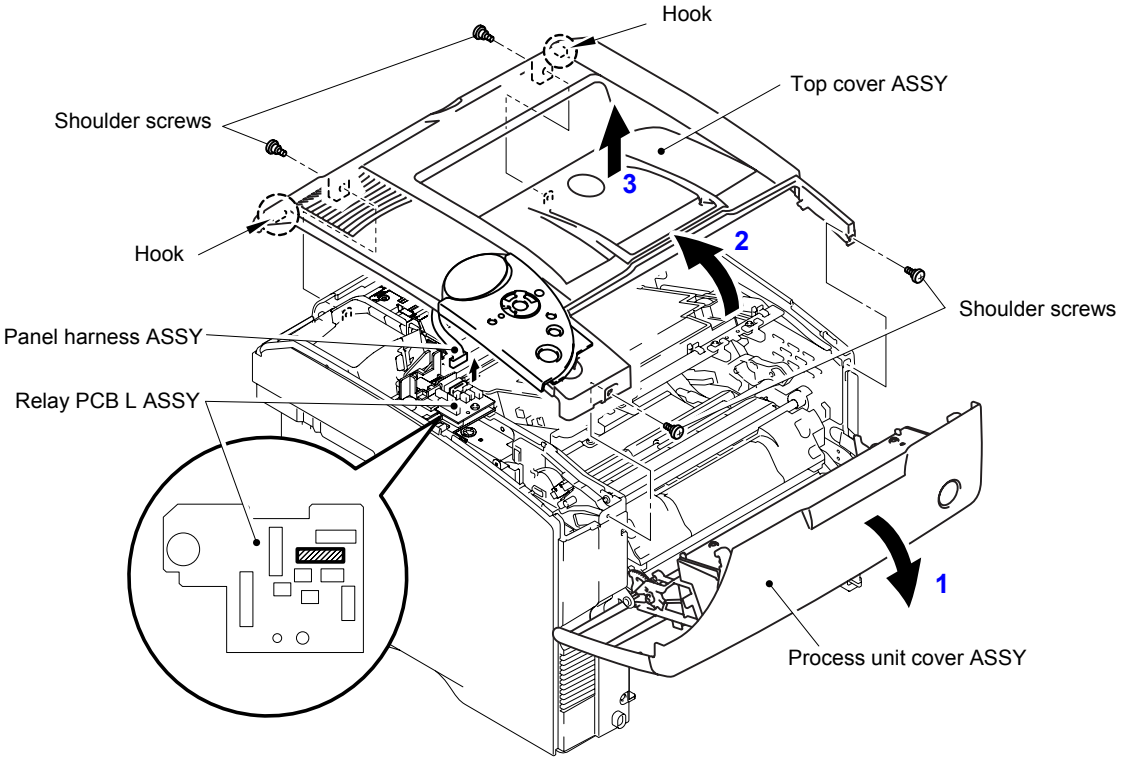

Fig. 4-21

(4) Release the two hooks, and remove the printed panel cover.

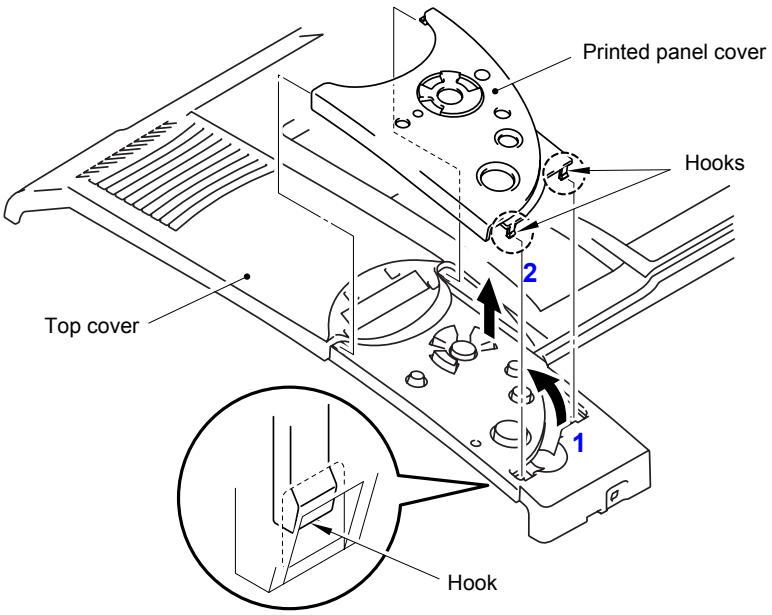

Fig. 4-22

(5) Remove the three cup B M3x8 Taptite screws, and remove the panel PCB ASSY.

(6) Disconnect the connector of back light PCB harness and LCD harness from the panel PCB ASSY.

NOTE:

- *After disconnecting the flat cable(s), check that each cable is not damaged at its end or short-circuited.*
- *When connecting the flat cable(s), do not insert it at an angle. After insertion, check that the cable is not at an angle.*

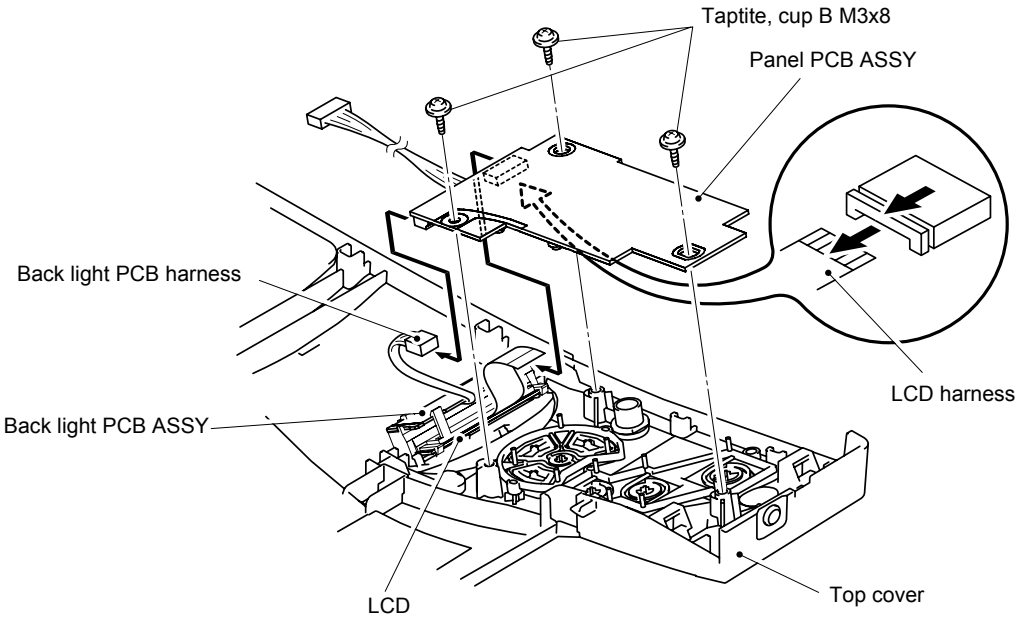

Fig. 4-23

(7) Release the two hooks, and remove the LCD holder.

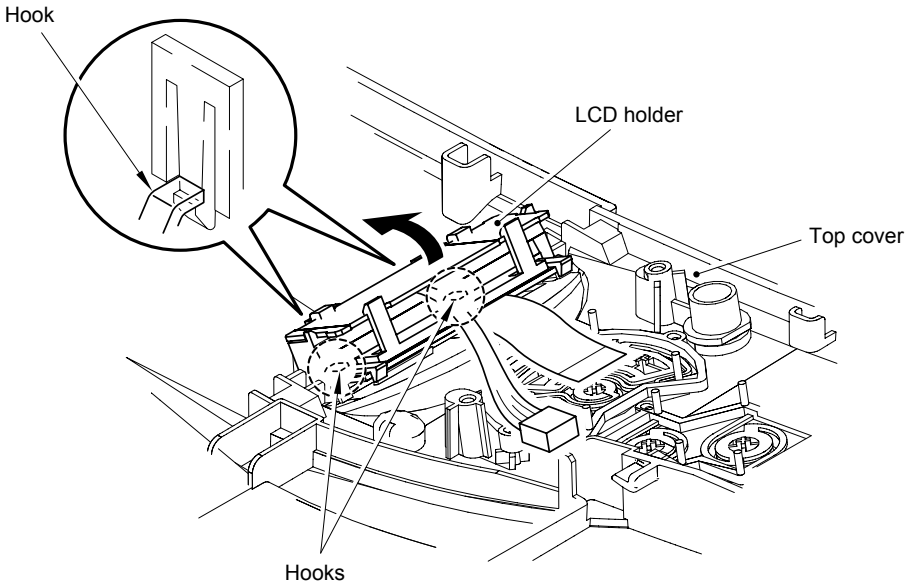

Fig. 4-24

(8) Release the two hooks “A”, and remove the back light PCB ASSY.

(9) Release the two hooks “B”, and remove the LCD.

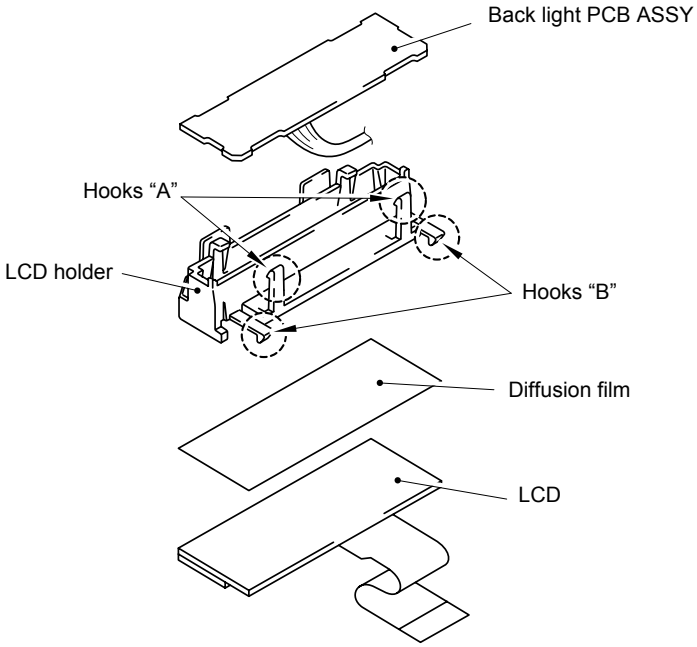

Fig. 4-25

3.9 Side Cover L

(1) Remove the two shoulder screws.

(2) Release the hook, and remove the side cover L.

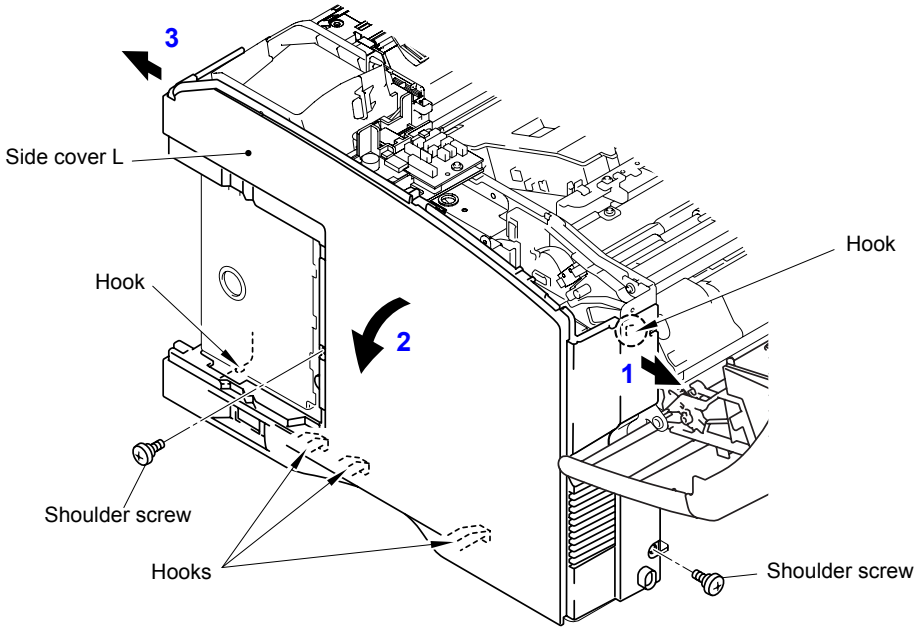

Fig. 4-26

3.10 Side Cover R

(1) Remove the shoulder screw.

(2) Release the three hooks, and remove the side cover R.

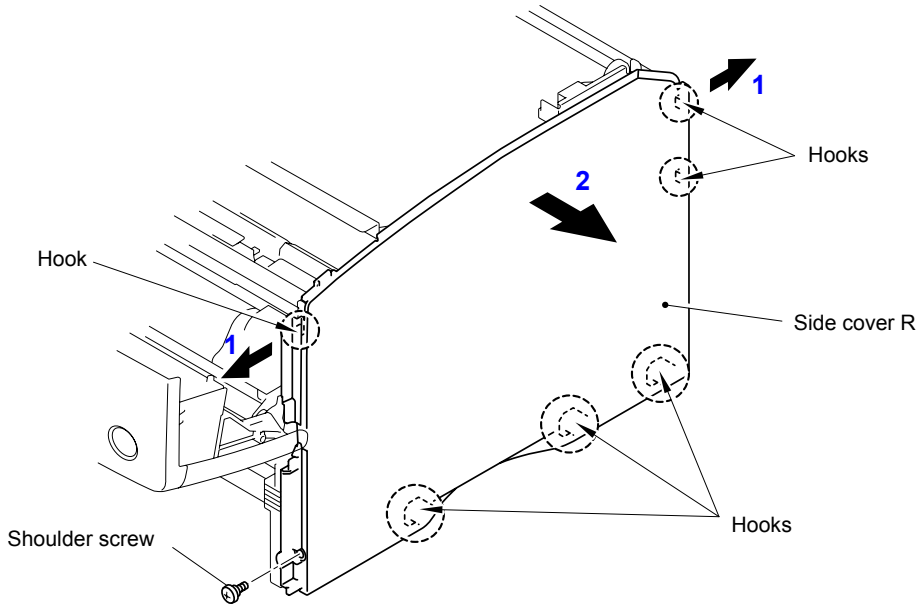

Fig. 4-27

3.11 MP Paper Guide 1 ASSY

(1) Remove the MP paper guide 1 ASSY.

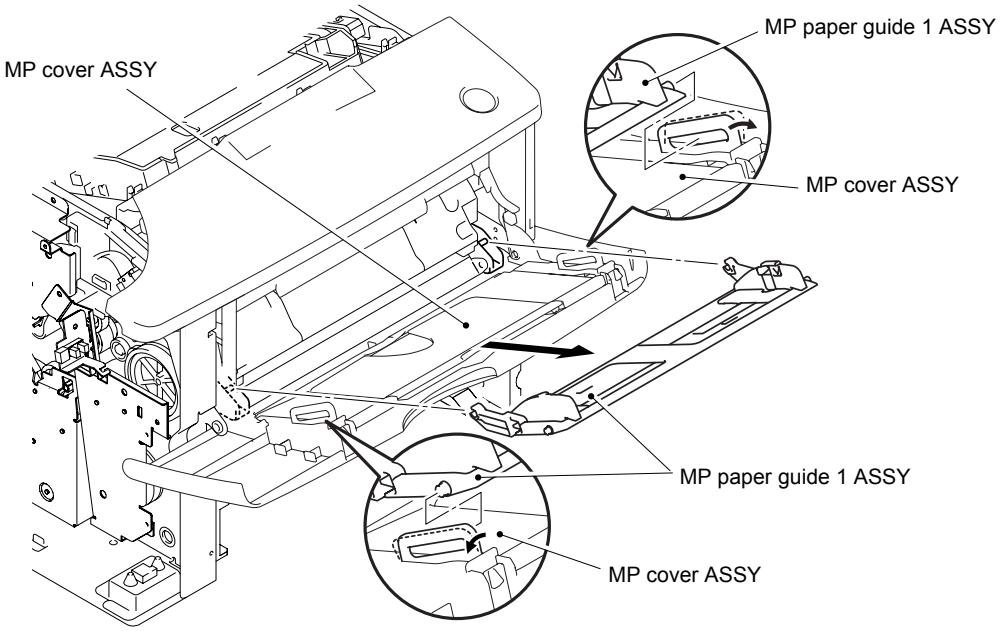

Fig. 4-28

3.12 Process Unit Cover ASSY / MP Cover ASSY

(1) Remove the two cover stopper rings.

(2) Remove the arm on both sides from the process unit cover ASSY.

(3) Loosen the screw, and remove the process unit cover ASSY and MP cover ASSY.

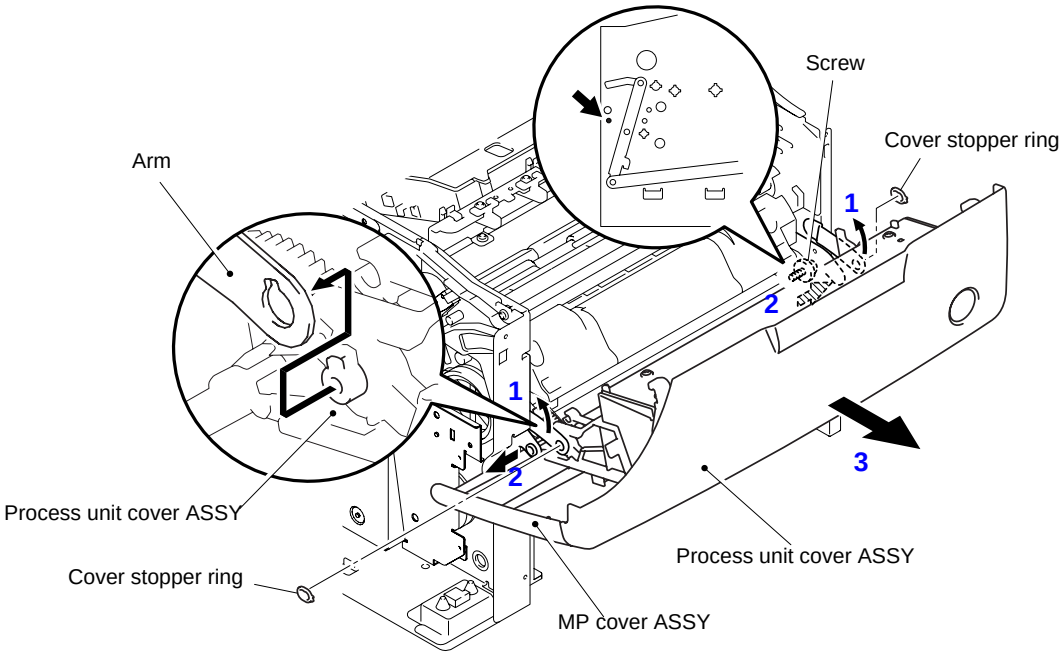

Fig. 4-29

(4) Remove the process unit cover ASSY from the MP cover ASSY.

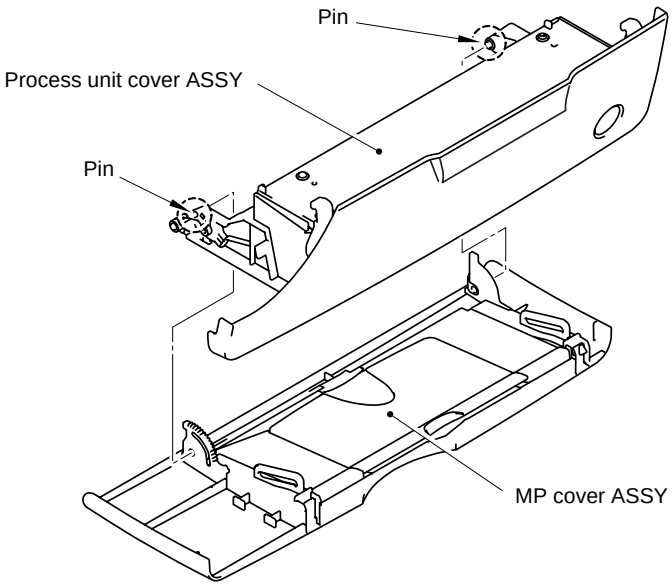

Fig. 4-30

3.13 Exit Roller Unit

(1) Disconnect the connector “A” from the relay PCB L ASSY.

(2) Disconnect the connector “B” from the relay PCB R ASSY.

(3) Remove the two cup S M3x6 Taptite screws, and remove the exit roll unit.

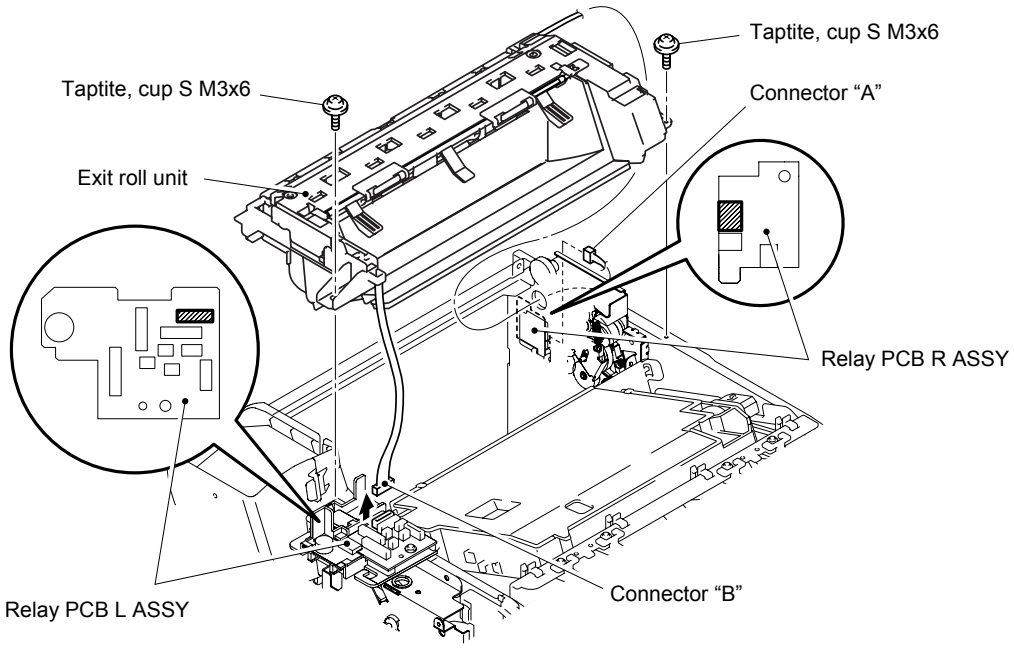

Fig. 4-31

(4) Release the two hooks, and remove the document cover sensor.

(5) Disconnect the connector.

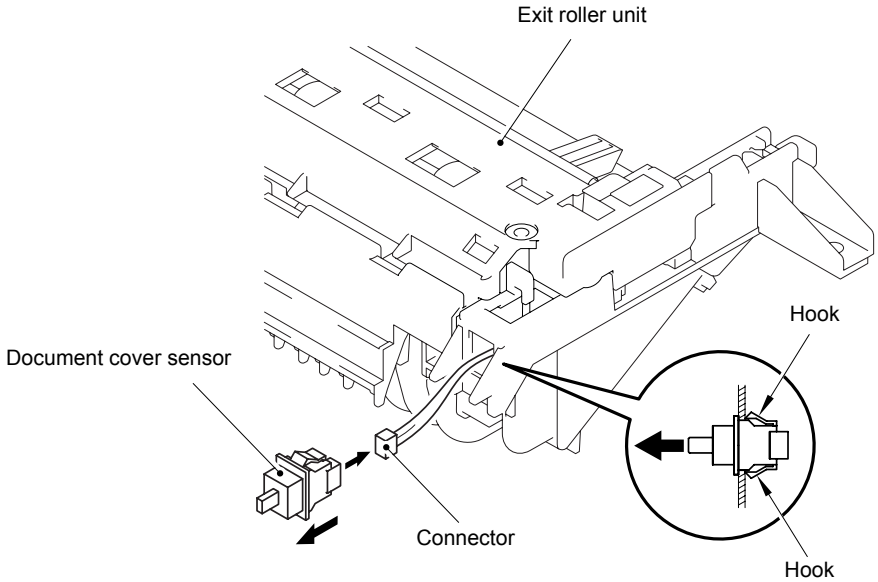

Fig. 4-32

(6) Release the four hooks, and remove the exit roller cover.

(7) Remove the paper upper guide.

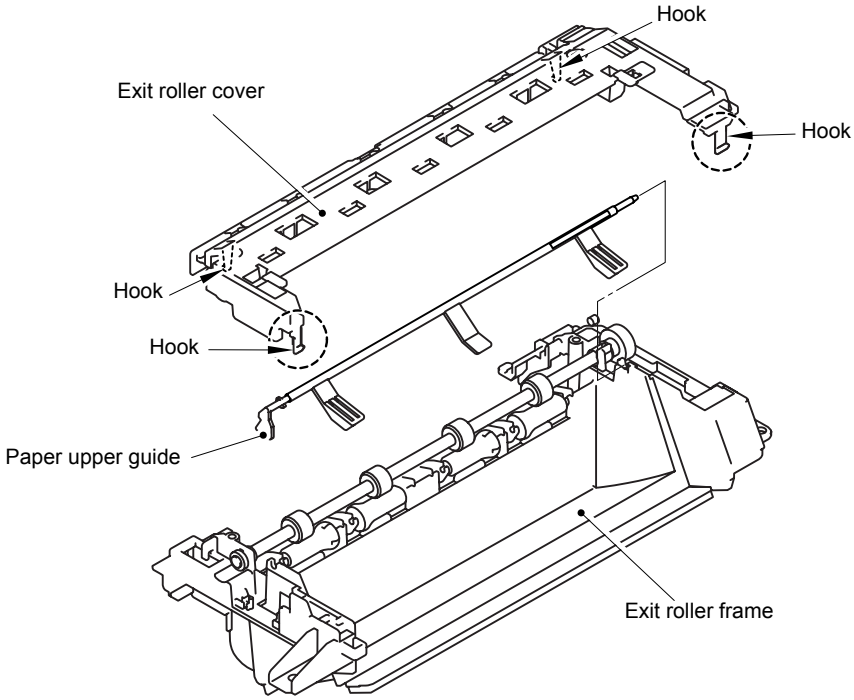

Fig. 4-33

3.14 Laser Unit

(1) Disconnect the connector and flat cable.

NOTE:

- *After disconnecting the flat cable(s), check that each cable is not damaged at its end or short-circuited.*
- *When connecting the flat cable(s), do not insert it at an angle. After insertion, check that the cable is not at an angle.*

(2) Remove the four cup S M3x16 Taptite screws, and remove the laser unit.

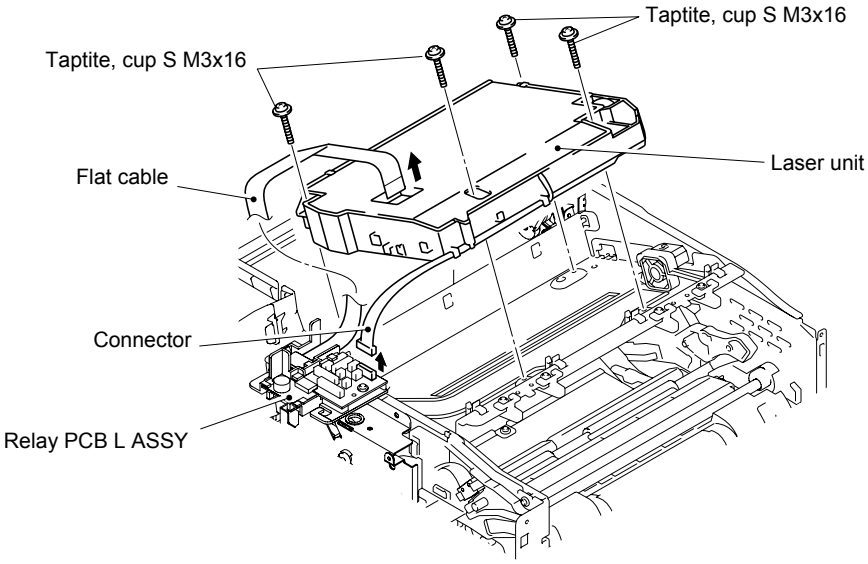

Fig. 4-34

(3) Disconnect the connector.

(4) Remove the shoulder screw, and remove the scanner fan.

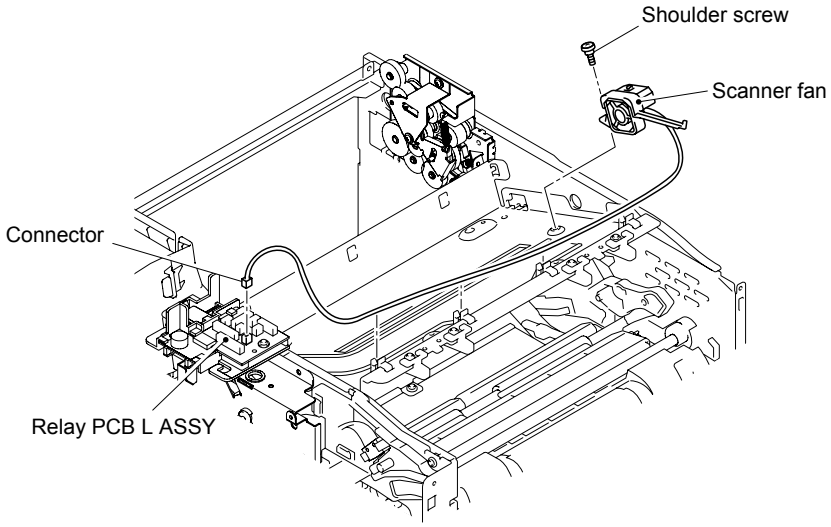

Fig. 4-35

NOTE:

After replacing the laser unit, be sure to carry out the scanner check. Refer to Chapter 7 (3.2 Function table, Service Menu mode).

3.15 Fixing Unit

NOTE:

When replacing the fixing unit, be sure to wait 30 minutes or more after turning off the power because its front side is heated.

(1) Disconnect the two connectors.

(2) Remove the two cup S M3x6 Taptite screws, and remove the fixing unit.

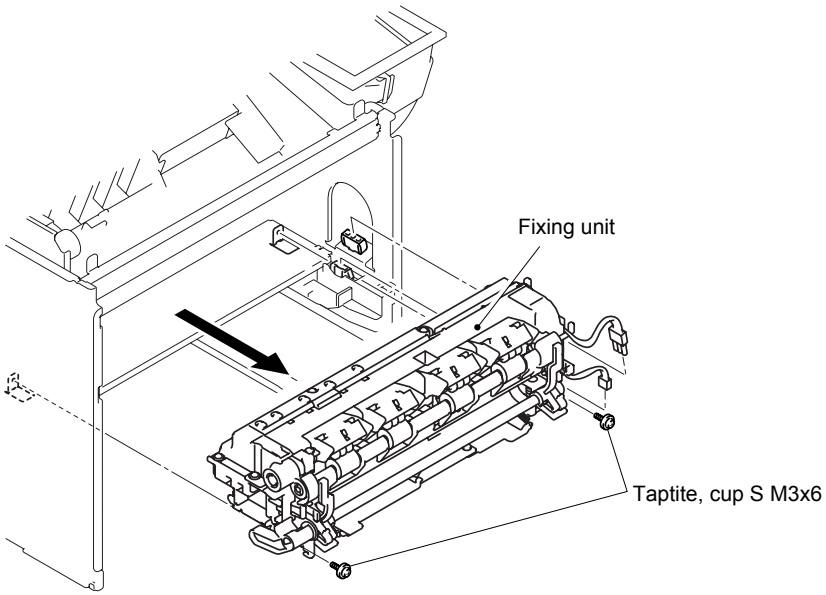

Fig. 4-36

(3) Remove the four cup B M3x10 Taptite screws, and remove the electrode cover.

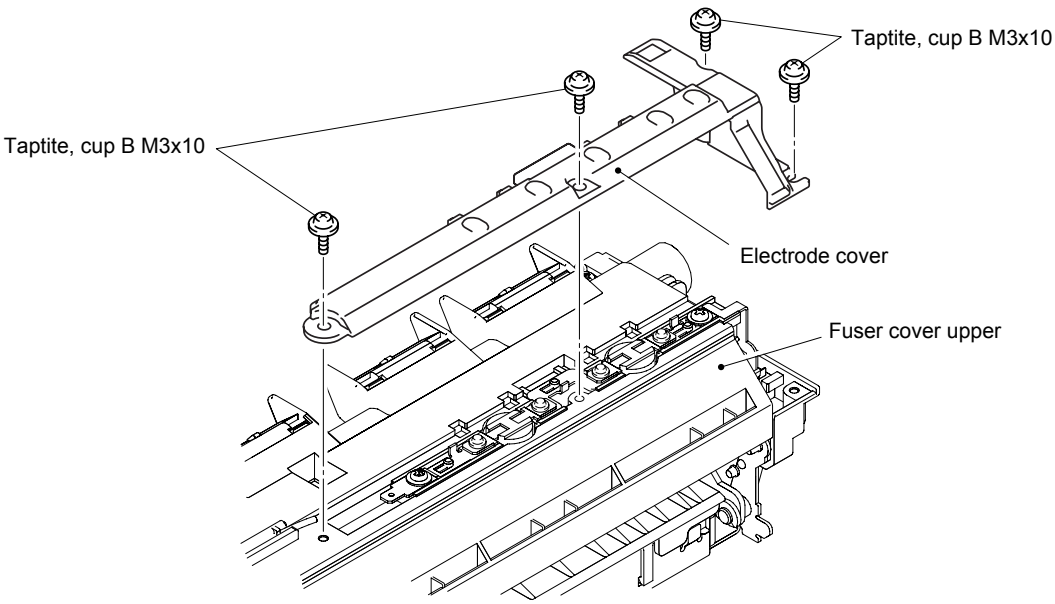

Fig. 4-37

(4) Remove the two pan (S/P washer) M3x8 screws, and remove the thermostat 1.

(5) Remove the two pan (S/P washer) M3x8 screws, and remove the thermostat 2.

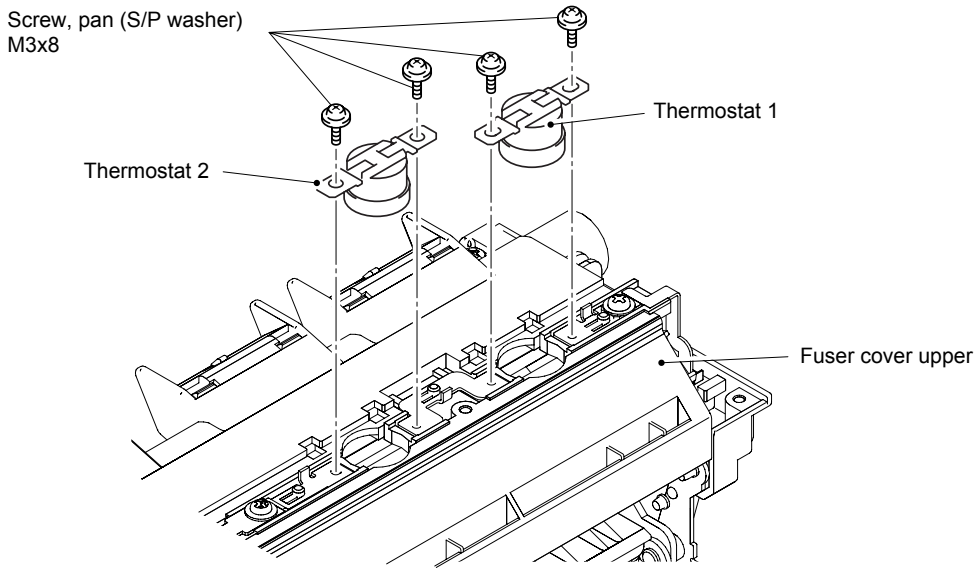

Fig. 4-38

(6) Pull out the harness.

(7) Remove the two cup B M3x10 Taptite screws, pan (S/P washer) M3x8 screw and bind M3x8 screw, and remove the fuser cover upper.

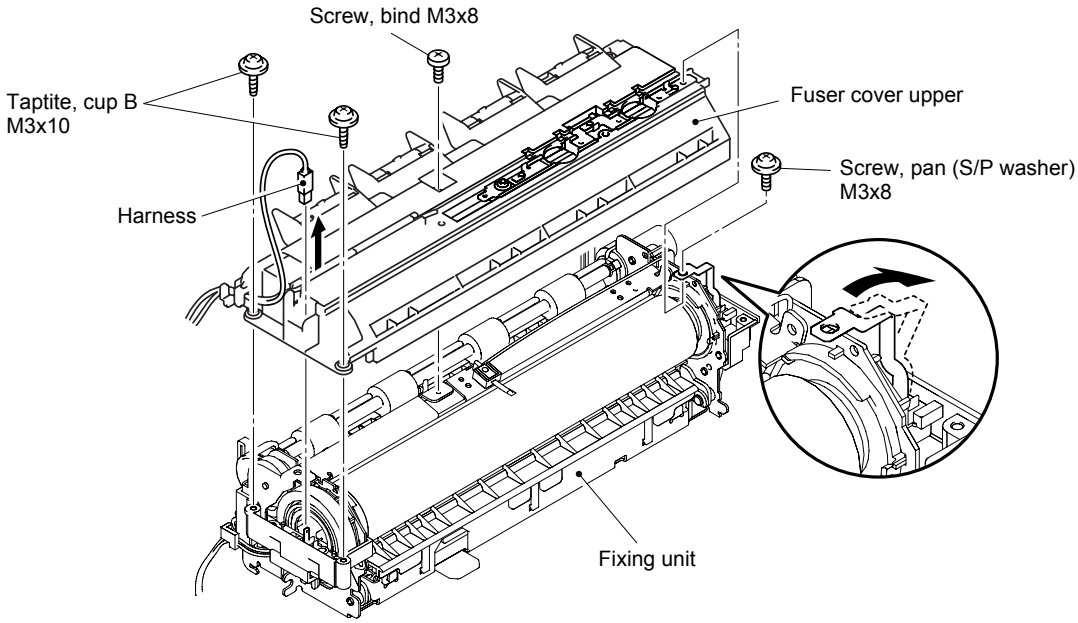

Fig. 4-39

(8) Remove the two pan (S/P washer) M3x8 screws.

(9) Remove the halogen heater 115S.

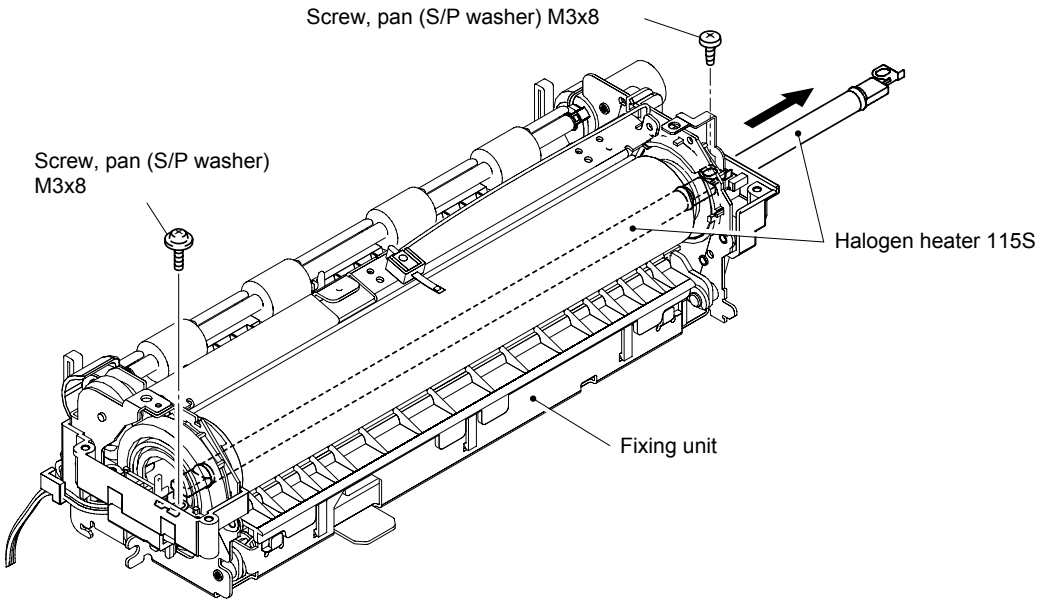

Fig. 4-40

(10) Remove the pan (S/P washer) M3x10L screw, and remove the thermistor C.

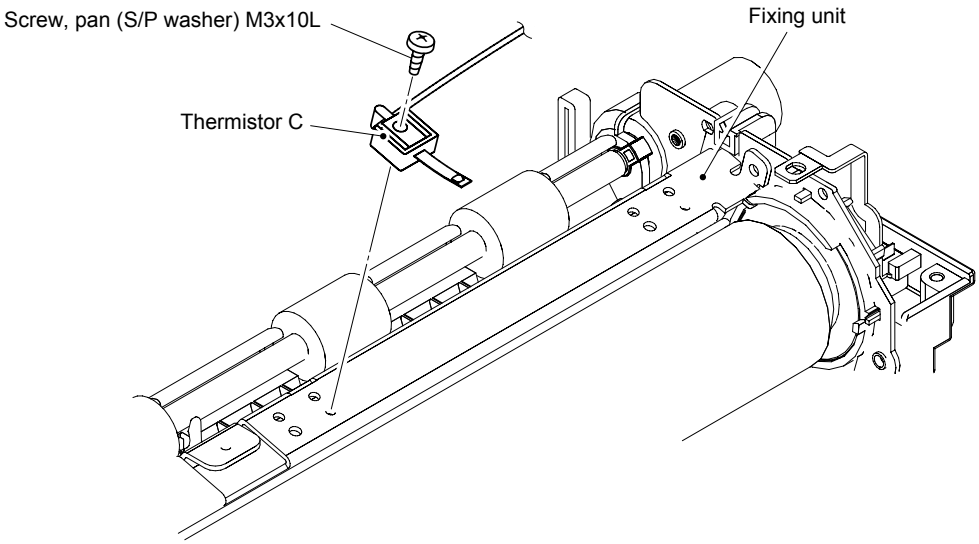

Fig. 4-41

(11) Push down the envelop lever R and the envelop lever L.

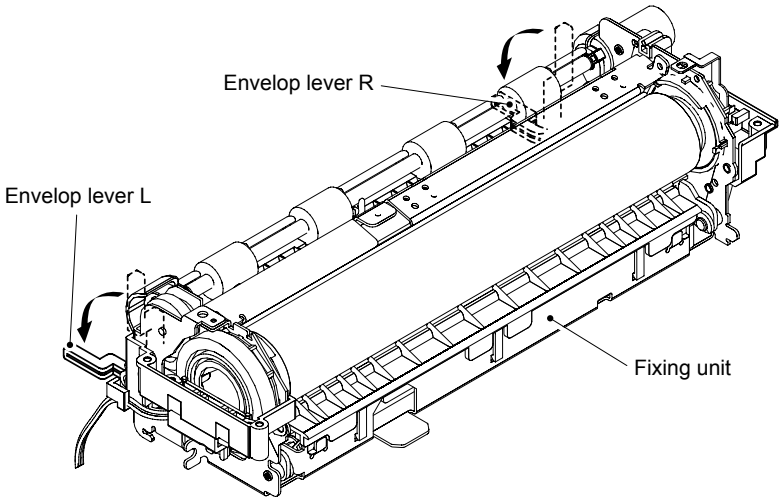

Fig. 4-42

(12) Remove the two bind S M3x6 Taptite screws, and remove the side cover L.

(13) Remove the two bind S M3x6 Taptite screws, and remove the side cover R.

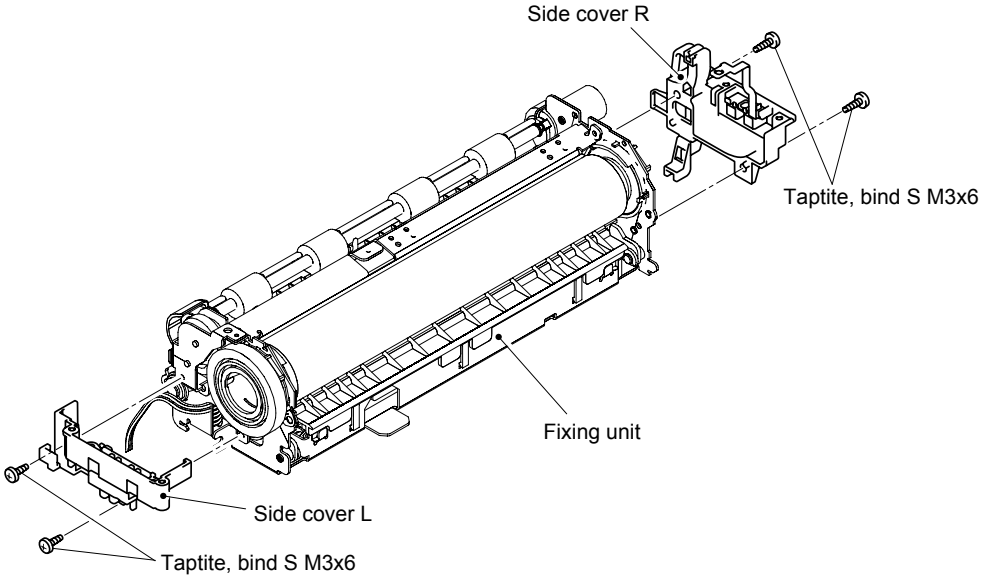

Fig. 4-43

(14) Remove the heat roller gear 30.

(15) Remove the two bind S M3x6 Taptite screws, and remove the gear plate ASSY.

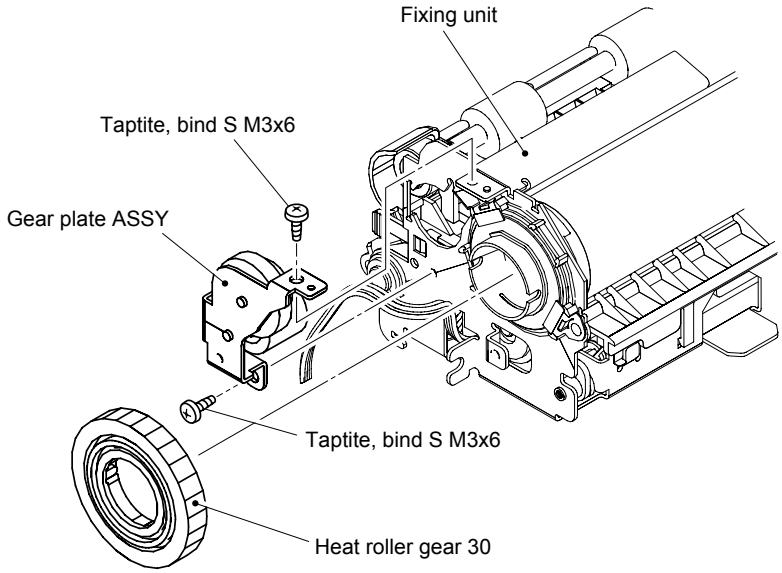

Fig. 4-44

(16) Remove the two shoulder screws and two separation plate springs, and remove the separation plate.

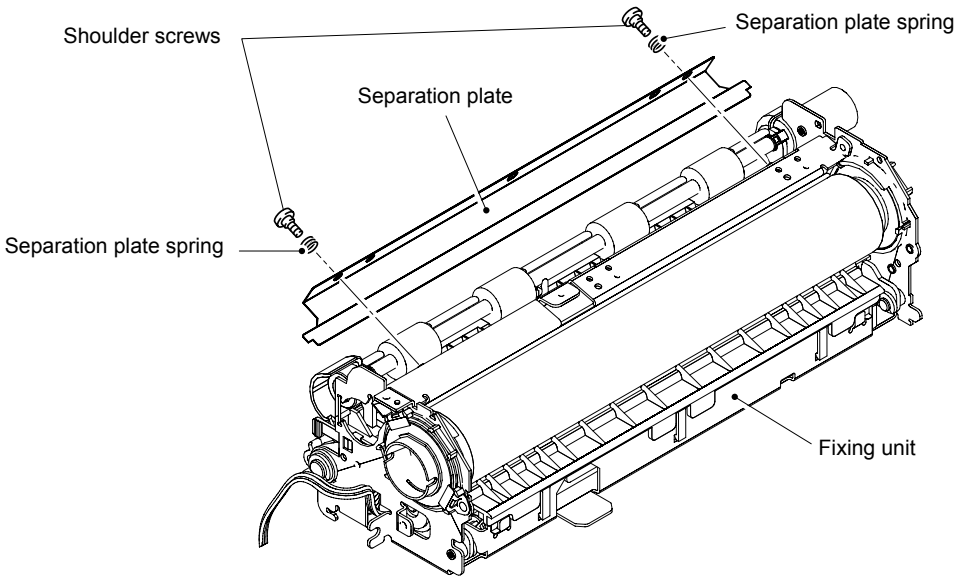

Fig. 4-45

(17) Remove the four bind S M3x6 Taptite screws, and remove the HR hold plate.

(18) Remove the HR ring.

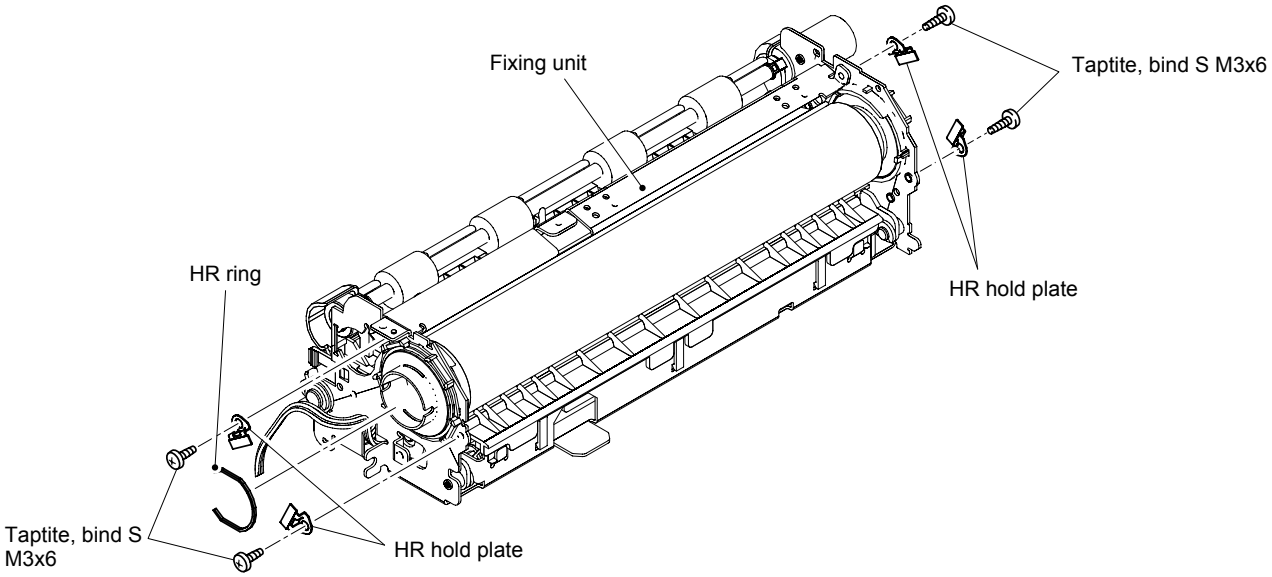

Fig. 4-46

(19) Remove the two HRB bearing holders, the two HR ball bearings, and the heat roller 34.

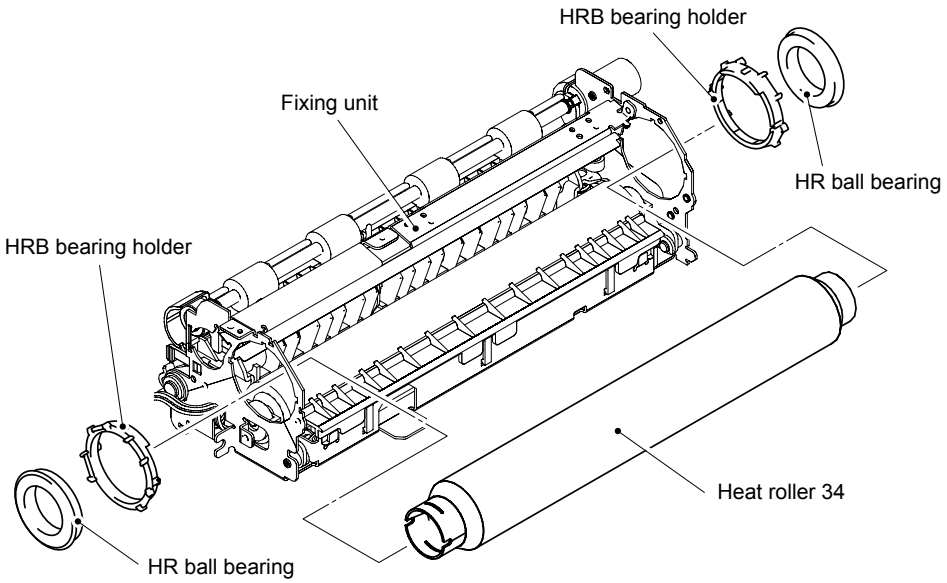

Fig. 4-47

(20) Release the three hooks, and remove the front shoot.

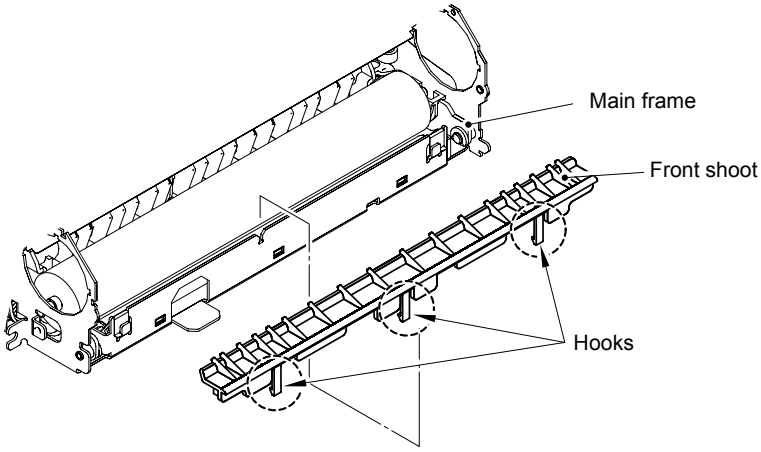

Fig. 4-48

(21) Remove the pressure roller 30.

(22) Remove the two PR ball bearings from the pressure roller 30.

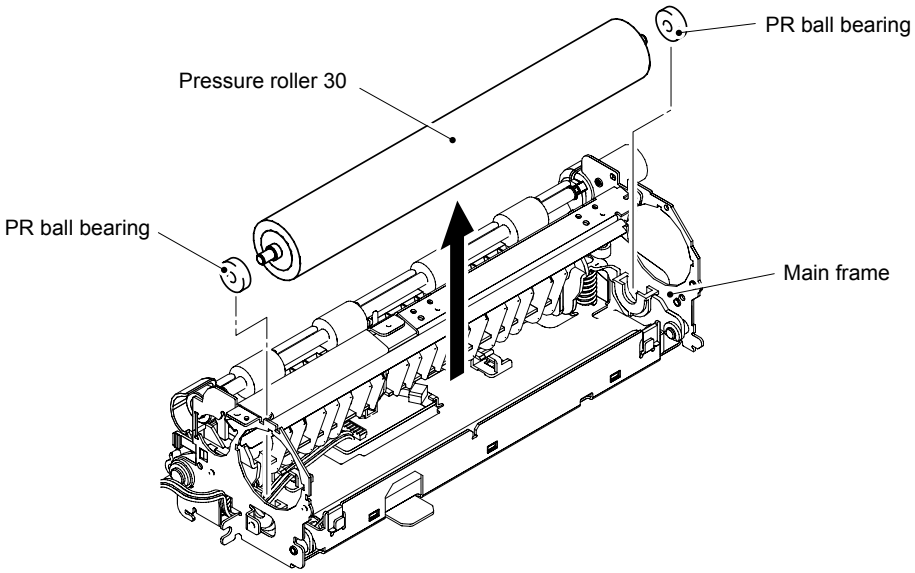

Fig. 4-49

(23) Release the hook, and remove the eject gear T.

(24) Release the hook, and remove the release cam.

(25) Remove the bearing 08.

(26) Remove the collar 8, and remove the bearing 08.

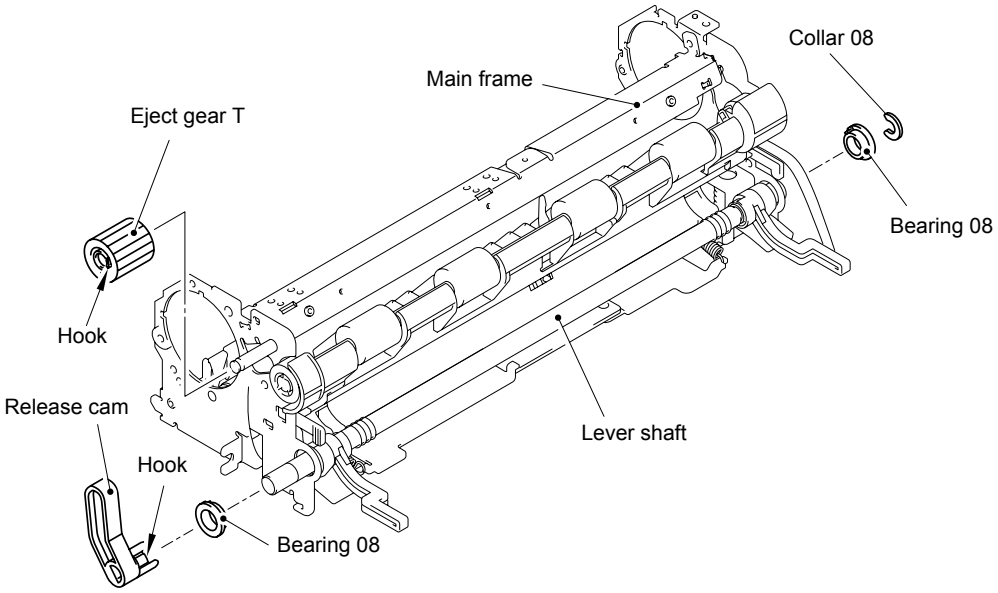

Fig. 4-50

(27) Remove the collar 8, and move the release lever, the envelope lever R, and the envelope lever spring toward inside.

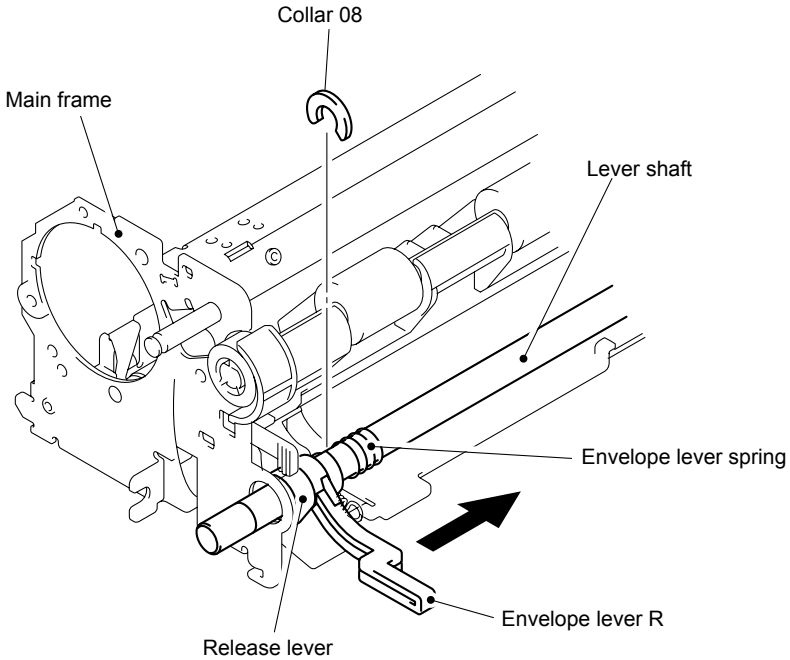

Fig. 4-51

(28) Remove the collar 8, and move the release lever, the envelope lever L, and the envelope lever spring toward inside.

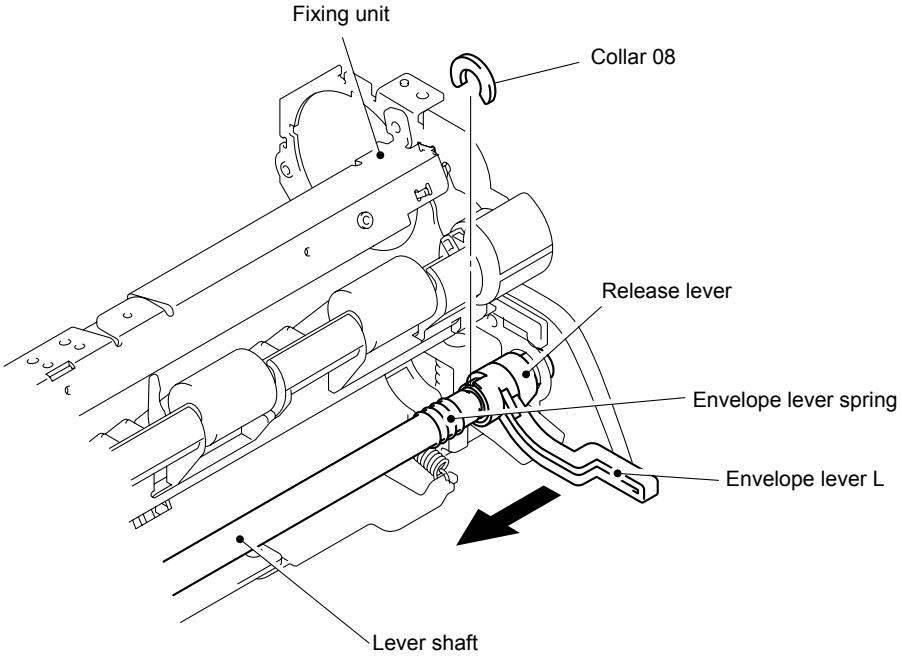

Fig. 4-52

(29) Remove the lever shaft.

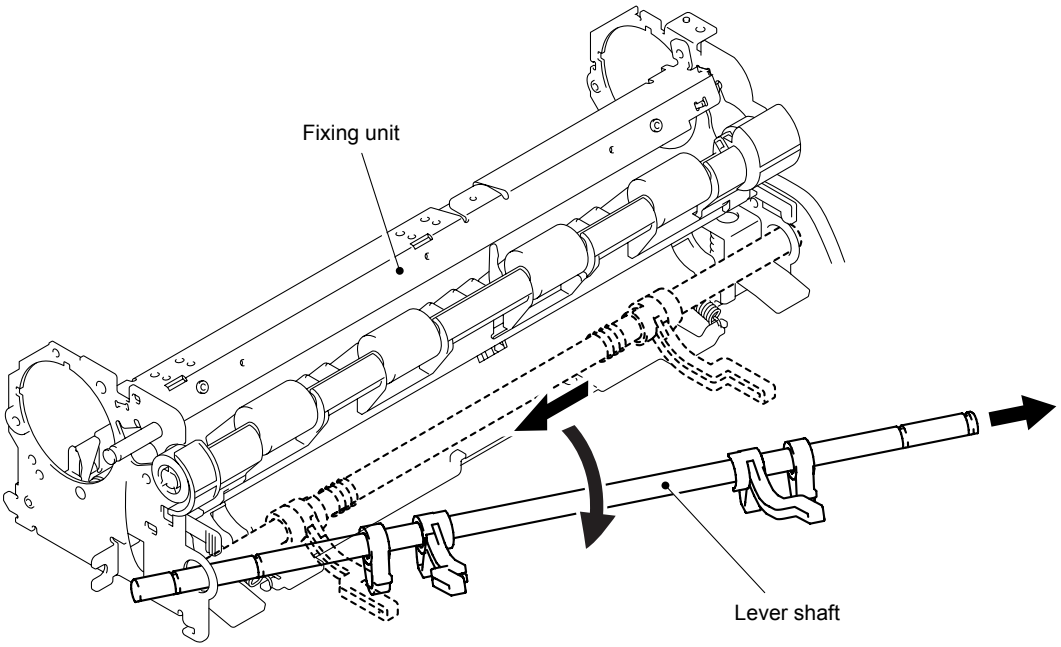

Fig. 4-53

(30) Remove the two open cover springs.

(31) Release the two hooks and two pins, and remove the open cover.

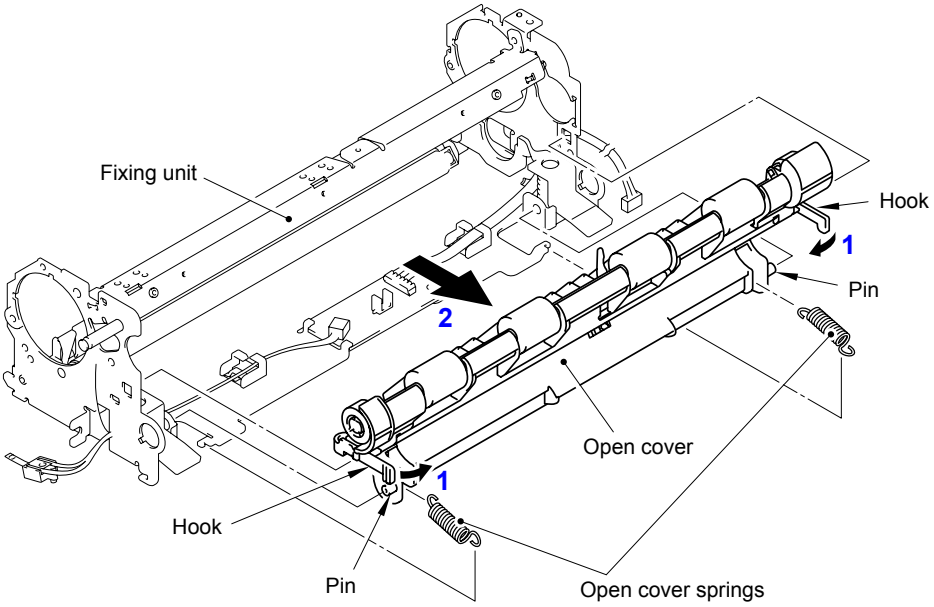

Fig. 4-54

(32) Disconnect the connector of the thermistor C.

(33) Remove the bind M3x4 screw, and remove the fixing sensor PCB ASSY.

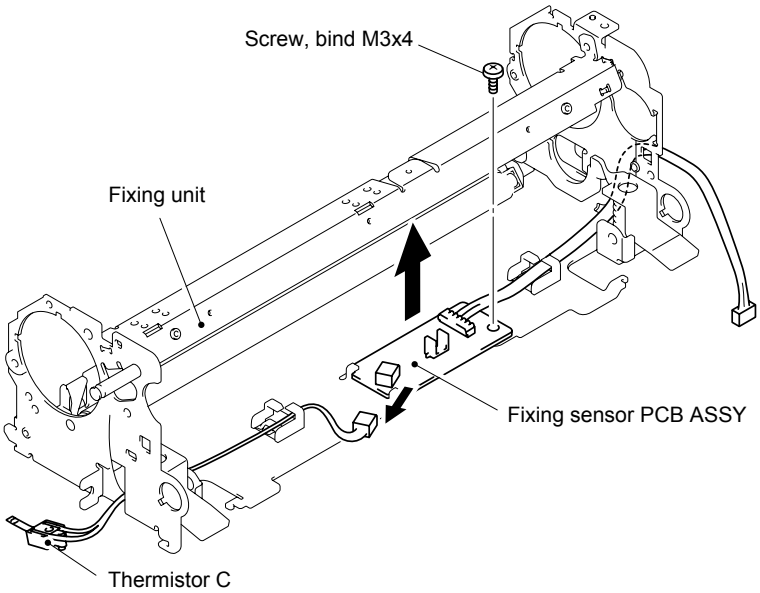

Fig. 4-55

(34) Release the hook and remove the eject roller gear 14 and eject roller bearing (L).

(35) Release the hook and remove the eject roller gear 14 and eject roller bearing (R).

(36) Remove the eject roller ASSY.

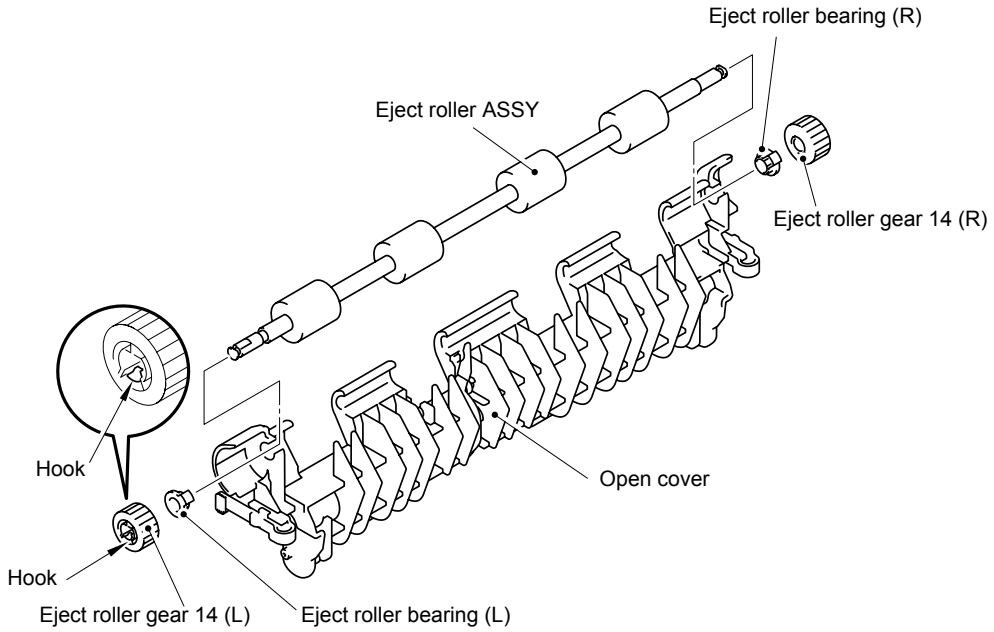

Fig. 4-56

(37) Remove the fixing sensor actuator and sensor spring.

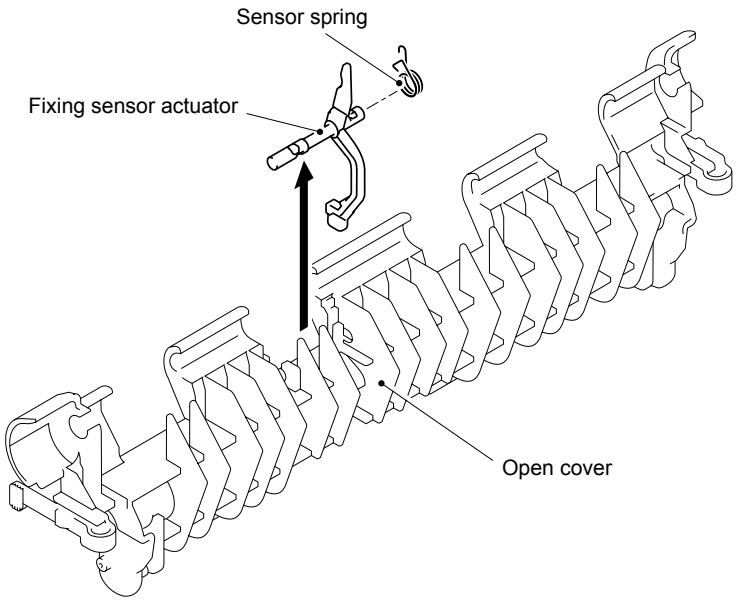

Fig. 4-57

NOTE:
Mount the sensor spring as shown in Fig. 4-58 when assembling the fixing sensor actuator.

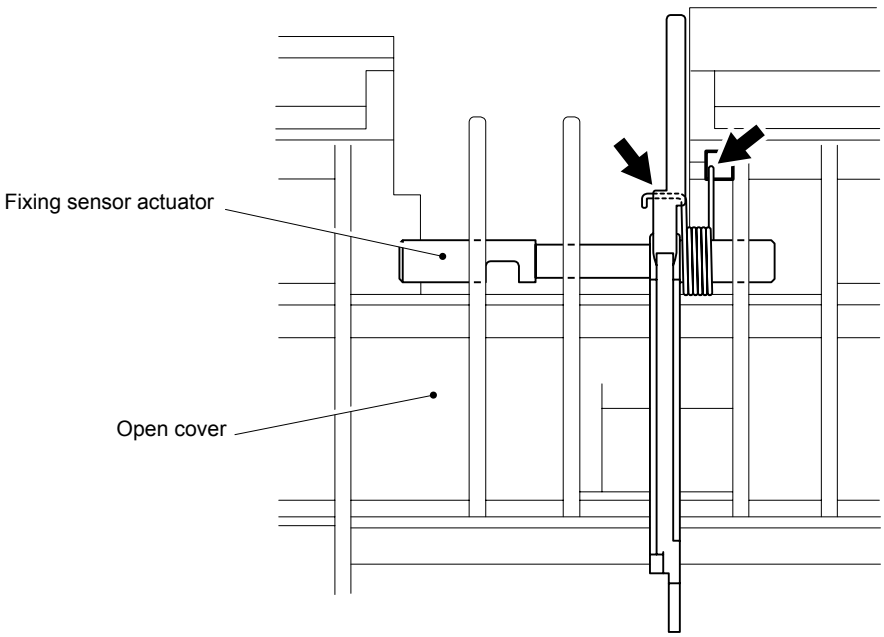

Fig. 4-58

3.16 Separation Roller ASSY / Feed Roller ASSY

(1) Release the hook, and remove the separation roller ASSY.

(2) Release the hook, and remove the feed roller ASSY.

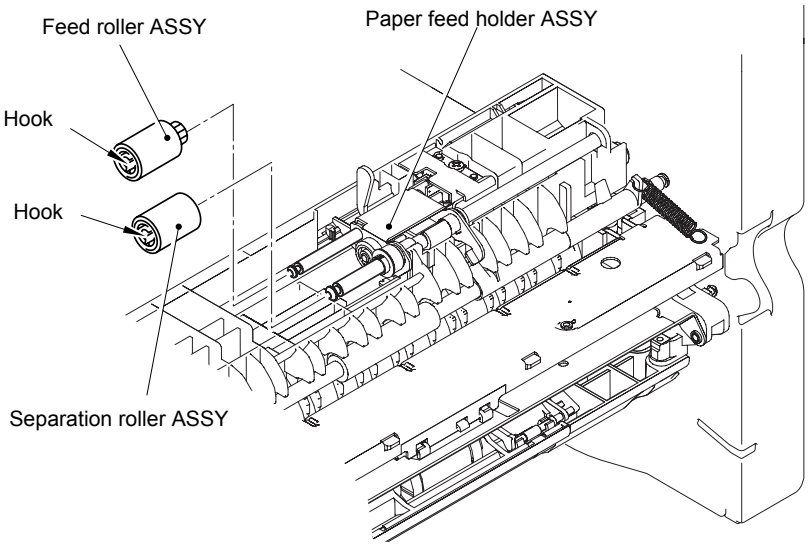

Fig. 4-59

3.17 Feed MP Unit

(1) Open the MP roller cover.

(2) Remove the bearing R.

(3) Remove the paper pick-up roller ASSY and roller collar.

(4) Remove the bearing L.

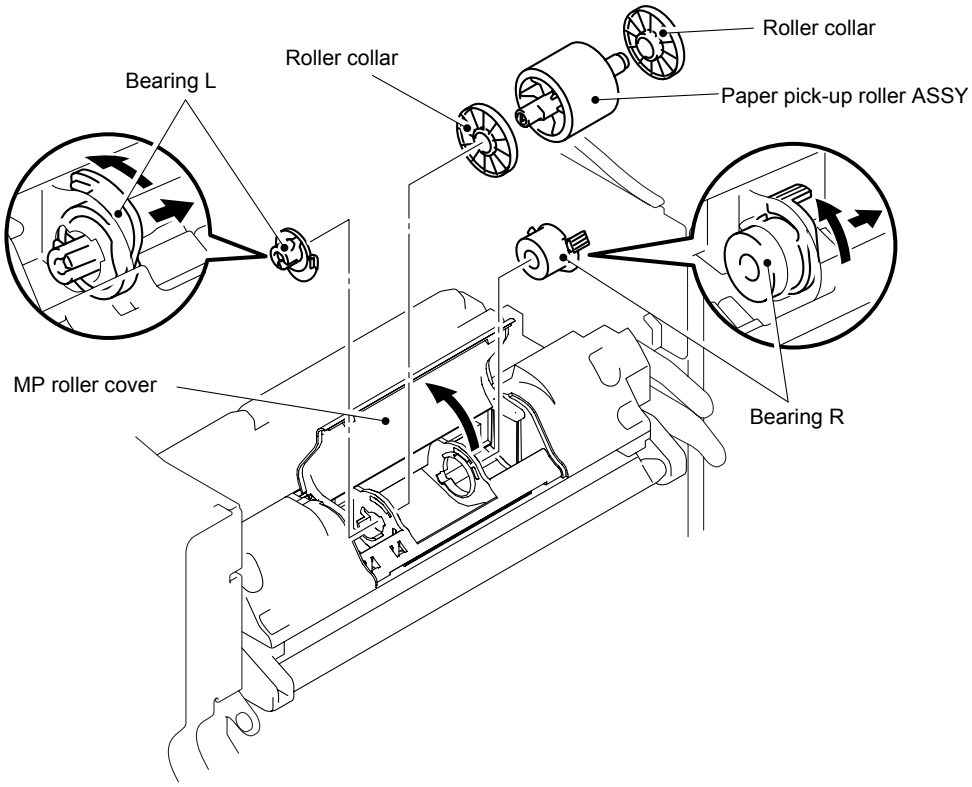

Fig. 4-60

(5) Remove the separation plate ASSY.

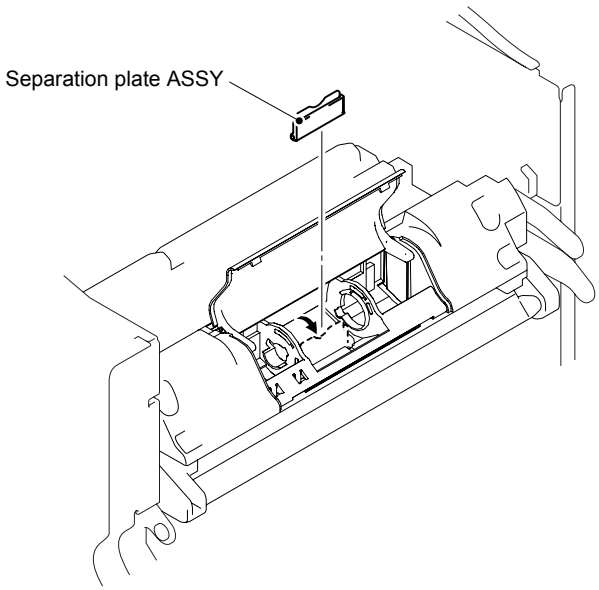

Fig. 4-61

3.18 Fan Motor 80 ASSY

(1) Disconnect the connector from the engine PCB.

(2) Remove the two cup S M3x6 Taptite screws, and remove the fan motor 80 unit.

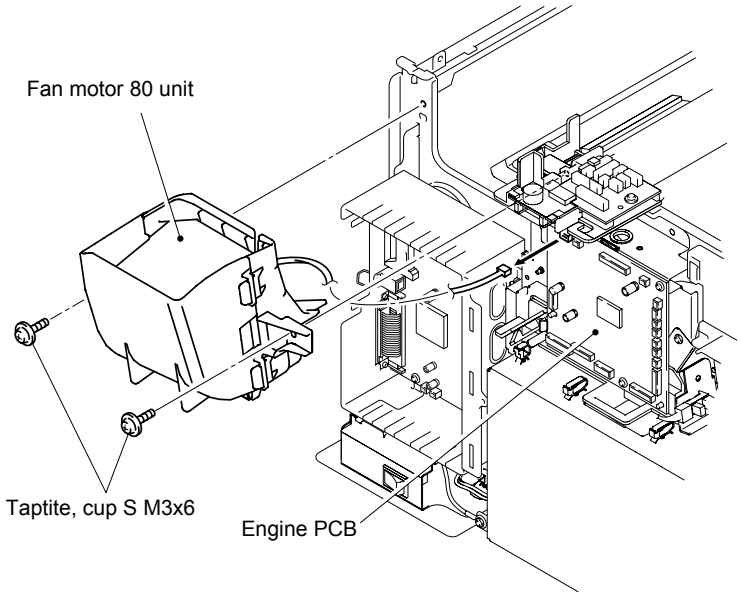

Fig. 4-62

(3) Release the four hooks, and remove the fan holder A.

(4) Remove the fan motor 80 ASSY from the fan holder B.

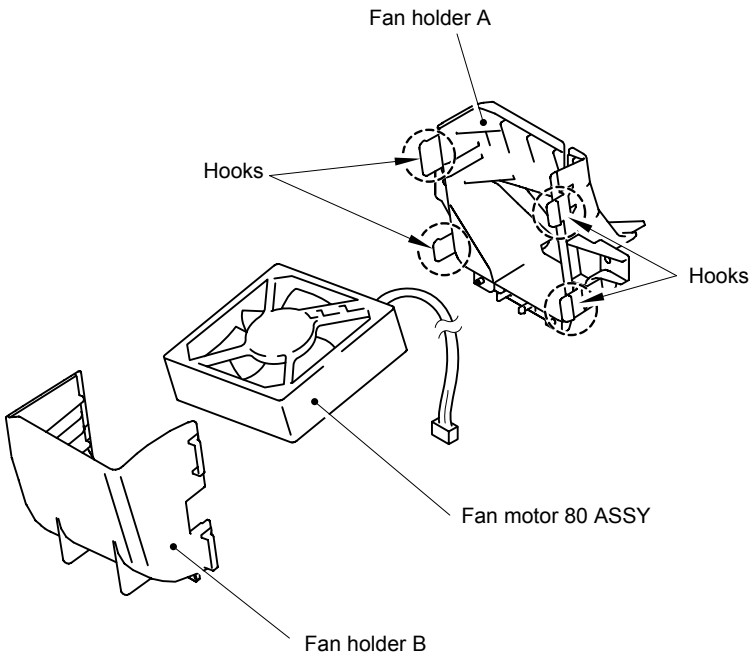

Fig. 4-63

3.19 Filter

(1) Remove the two bosses, and remove the main duct.

(2) Remove the filter from the main duct.

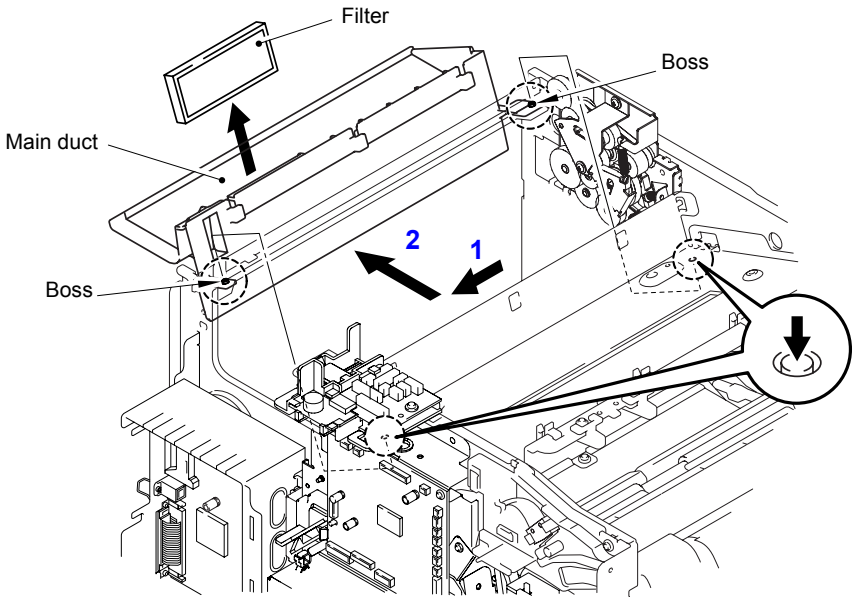

Fig. 4-64

3.20 Engine PCB

(1) Disconnect the all connectors.

(2) Remove the three cup S M3x6 Taptite screws, and remove the engine PCB.

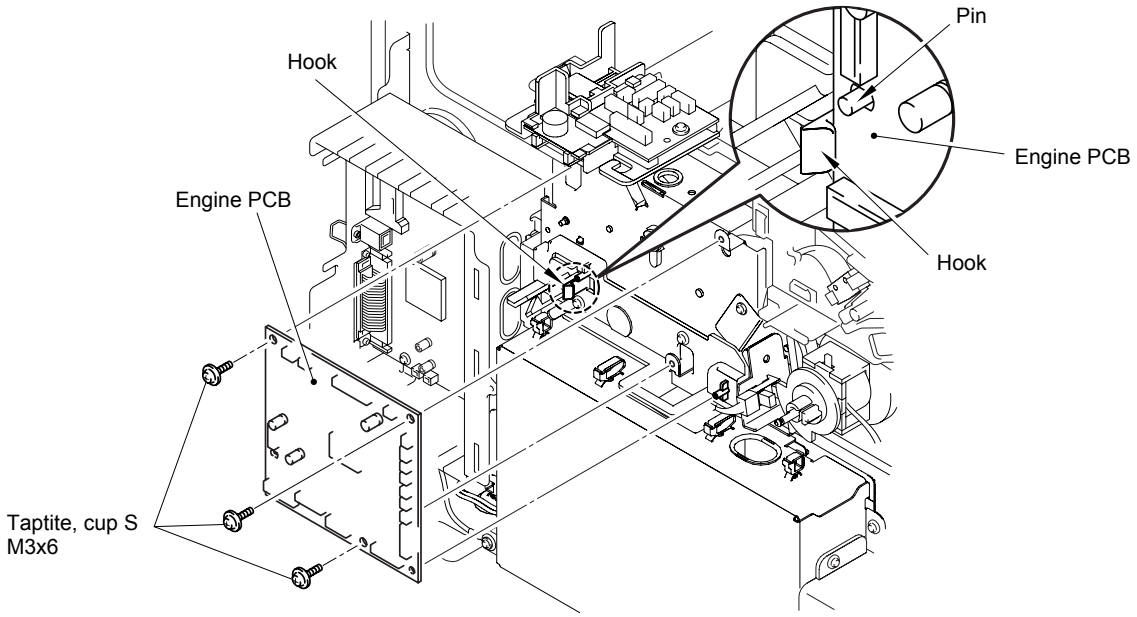

Fig. 4-65

3.21 Main PCB

(1) Disconnect the all connectors.

NOTE:

- *After disconnecting the flat cable(s), check that each cable is not damaged at its end or short-circuited.*
- *When connecting the flat cable(s), do not insert it at an angle. After insertion, check that the cable is not at an angle.*

(2) Remove the four cup S M3x6 Taptite screws and three screws, and remove the main PCB.

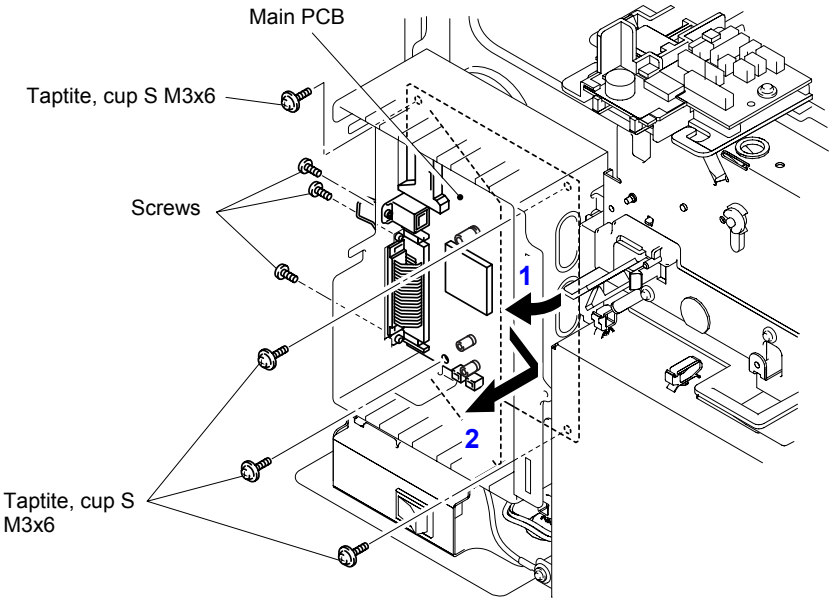

Fig. 4-66

NOTE:

- *After replacing the Main PCB, be sure to carry out the scanner check. Refer to Chapter 7 (3.2 Function table, Service Menu mode).*

3.22 Fan 40

(1) Remove the two cup S M3x6 Taptite screws, and remove the fan 40.

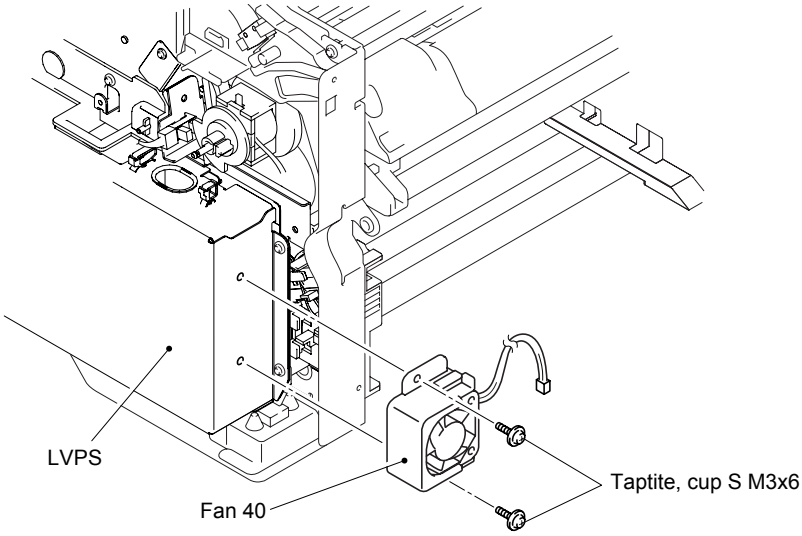

Fig. 4-67

3.23 LVPS

(1) Remove the four cup S M3x6 Taptite screws, and remove the main IF plate.

(2) Pull out the connector from the connector blacket.

(3) Remove the pan (washer) M3.5x6 screws, and remove the ground wire.

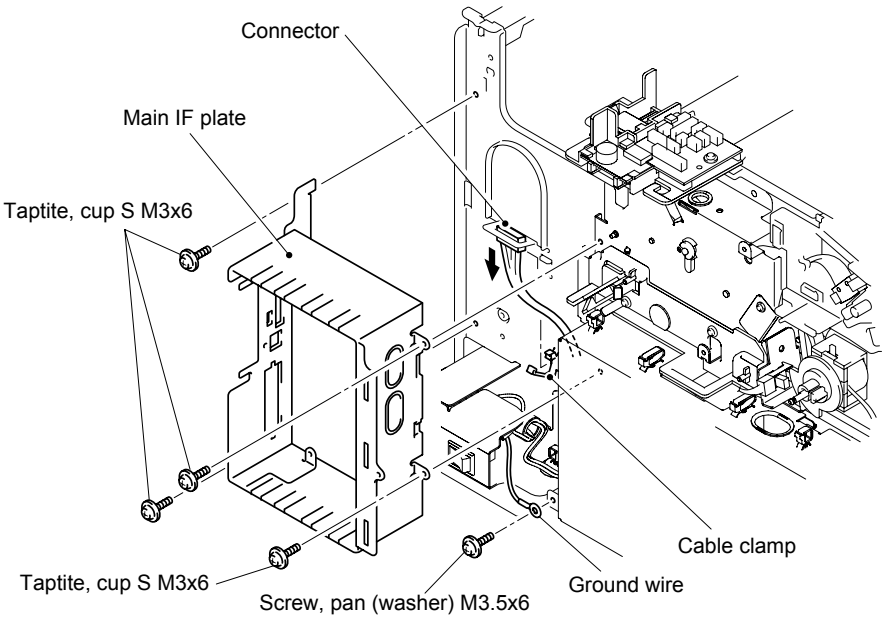

Fig. 4-68

(4) Remove the two cup S M3x6 Taptite screws, and remove the inlet unit.

(5) Remove the four cup S M3x6 Taptite screws, and remove the LVPS.

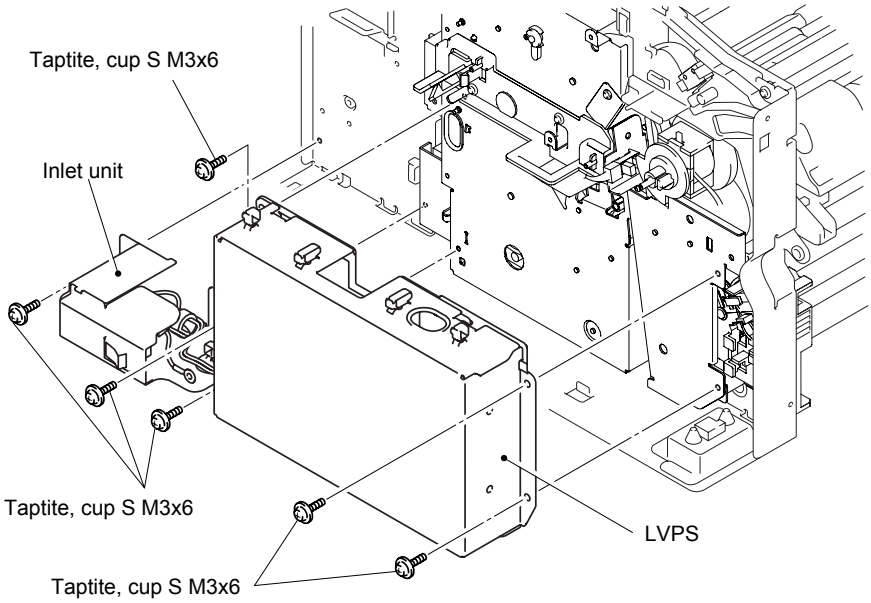

Fig. 4-69

(6) Remove four screws, LVPS cover, and LVPS PCB.

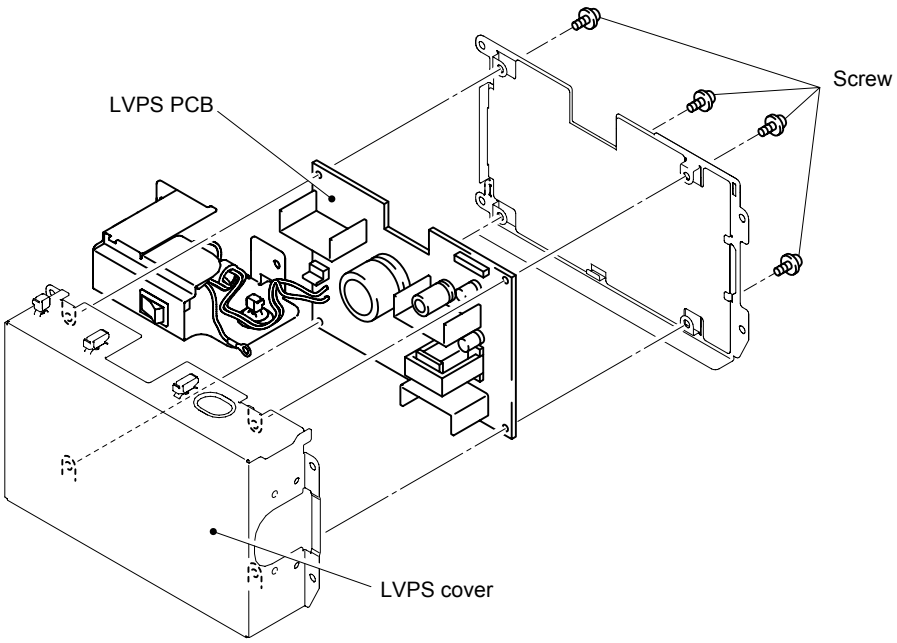

Fig. 4-70

3.24 Photo Interrupter

(1) Disconnect the connector, and remove the photo interrupter.

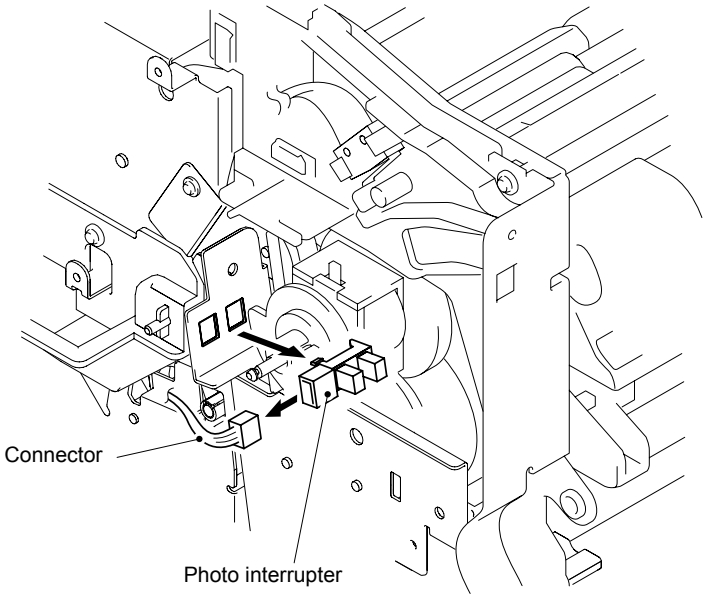

Fig. 4-71

3.25 T1 Solenoid ASSY / MP Solenoid ASSY

(1) Remove the two cup S M3x6 Taptite screws, and remove the feeding gear plate unit.

(2) Remove the spring.

(3) Remove the two cup S M3x6 Taptite screws, and remove the solenoid holder.

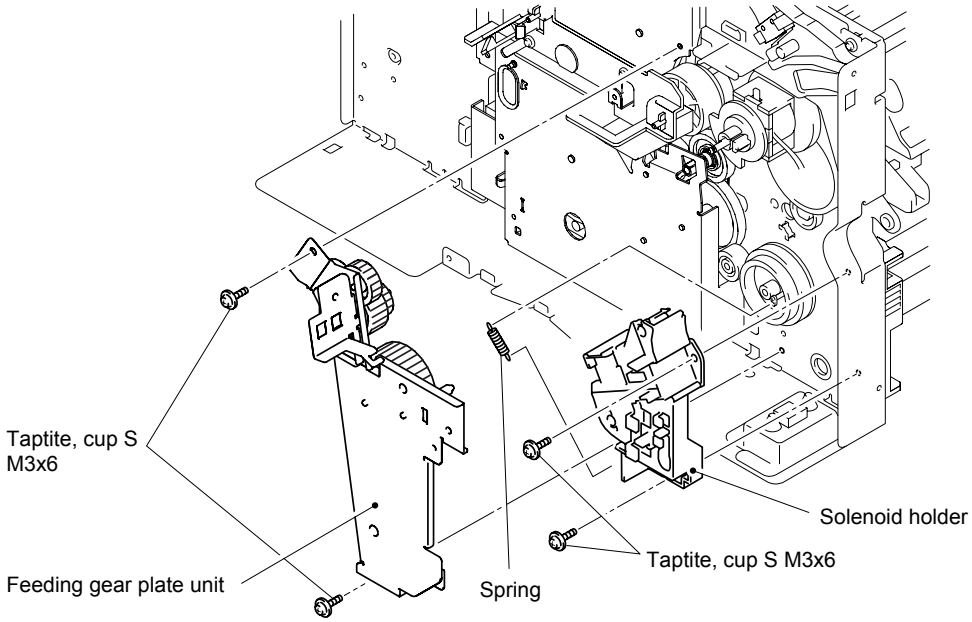

Fig. 4-72

(4) Release the two hooks, and remove the MP solenoid lever.

(5) Remove the solenoid spring.

(6) Remove the flanged M3x3.5 screw.

(7) Release the hook, and remove the MP solenoid ASSY. (red)

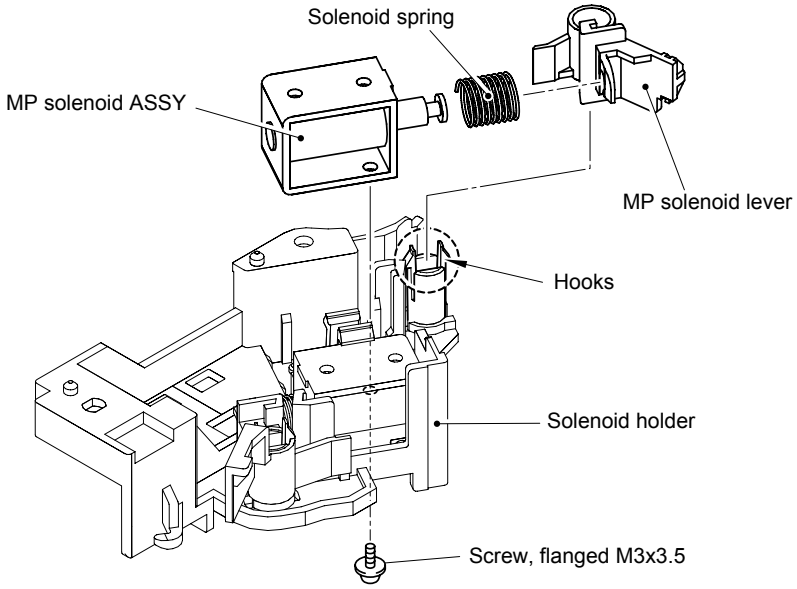

Fig. 4-73

(8) Release the two hooks, and remove the T1 solenoid lever.

(9) Remove the solenoid spring.

(10) Remove the flanged M3x3.5 screw.

(11) Release the hook, and remove the T1 solenoid ASSY. (blue)

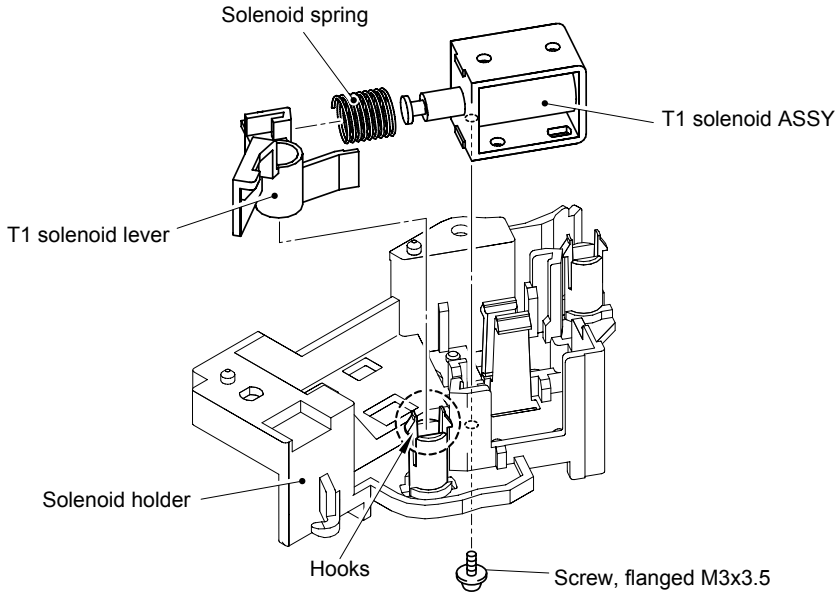

Fig. 4-74

3.26 Clutch Spring Separating

(1) Release the hook, and remove the separating disk.

(2) Remove the collar 6, and remove the clutch spring separating.

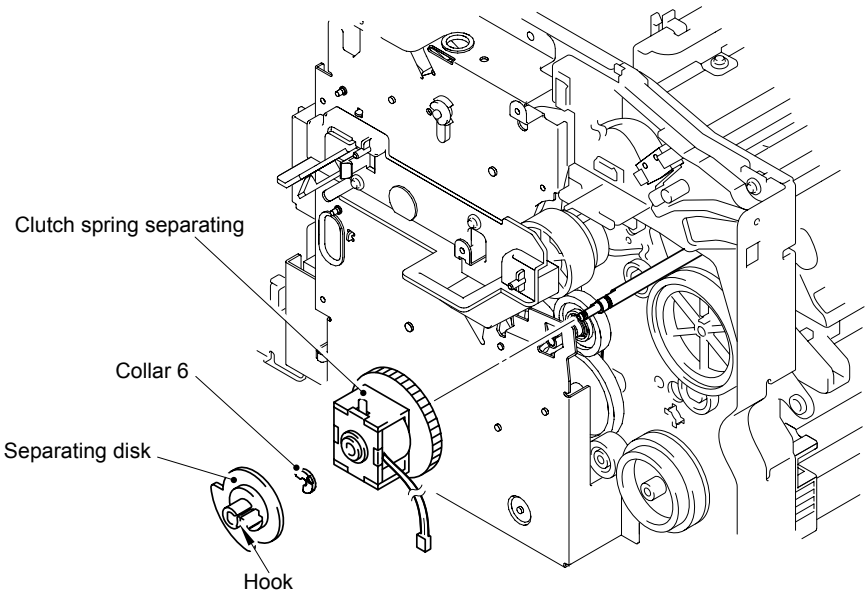

Fig. 4-75

3.27 Magnetic Clutch Regist / Collar 6

(1) Remove the two cup S M3x6 Taptite screws, and remove the harness guard.

(2) Remove the collar 6, and remove the magnetic clutch regist.

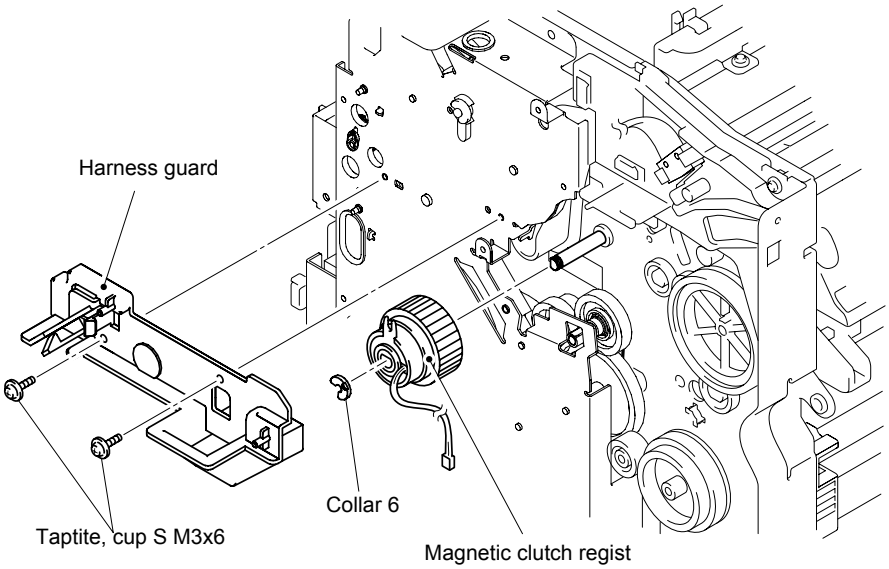

Fig. 4-76

3.28 Main Motor

(1) Remove the five cup S M3x6 Taptite screws, and remove the main gear plate ASSY.

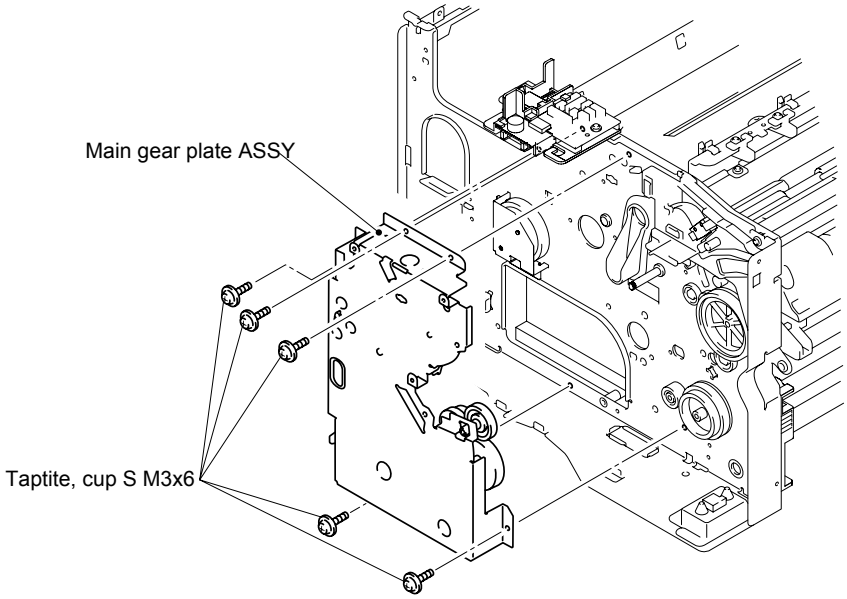

Fig. 4-77

(2) Remove the five cup S M3x6 Taptite screws, and remove the main motor ASSY.

(3) Release the hook, and remove the gear 23/36.

(4) Remove the main motor harness ASSY.

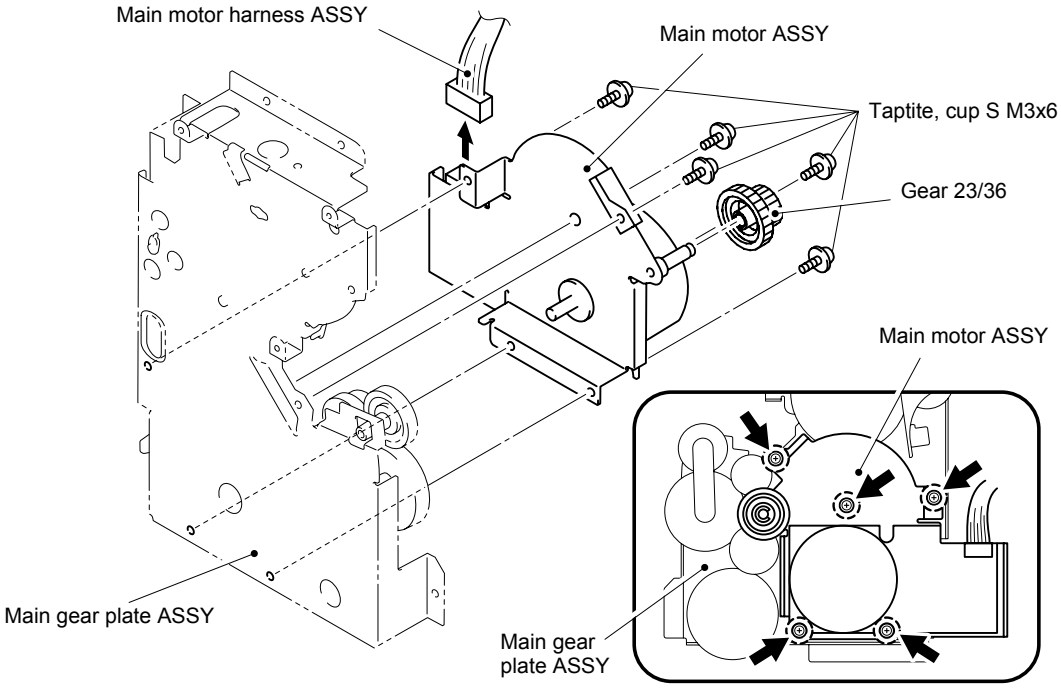

Fig. 4-78

3.29 Developer Clutch

(1) Remove the collar 4 and bearing 4, and remove the developer clutch.

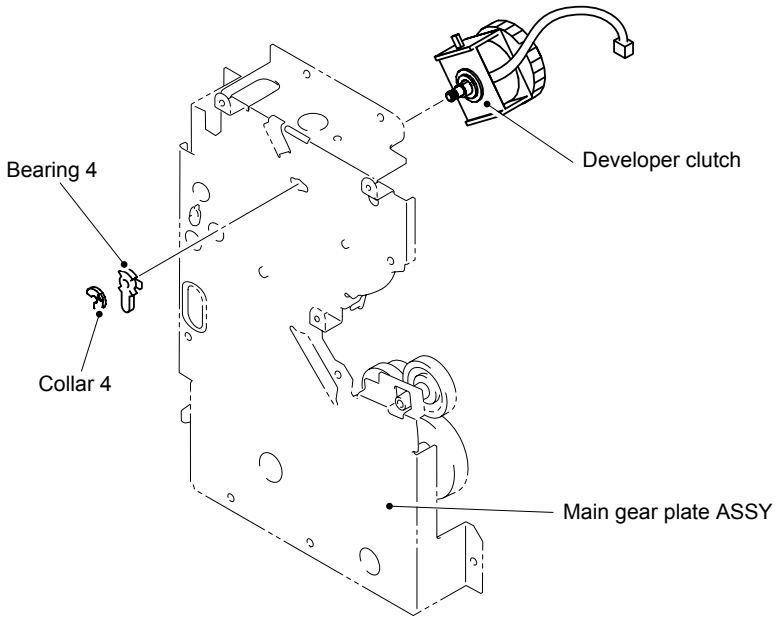

Fig. 4-79

3.30 Develop Joint

(1) Remove the develop joint.

(2) Remove the joint stopper from the develop joint.

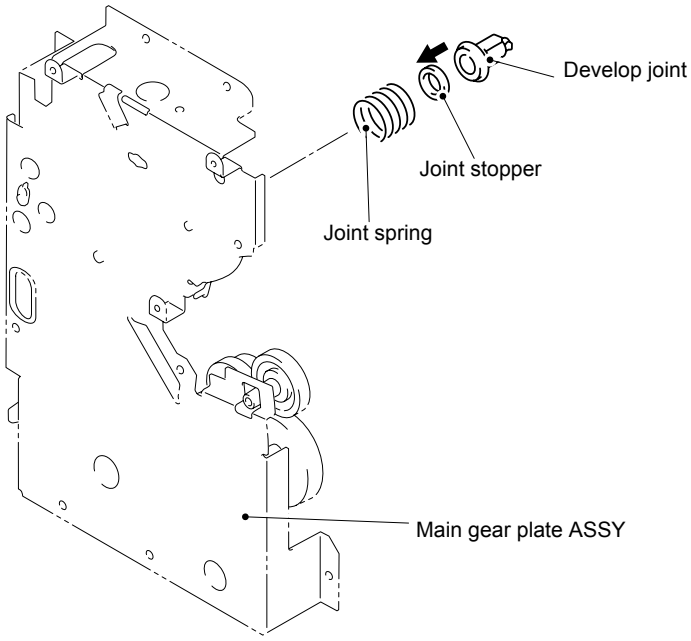

Fig. 4-80

3.31 Interlock SW ASSY

(1) Disconnect the connector.

(2) Release the two hooks, and remove the interlock SW ASSY.

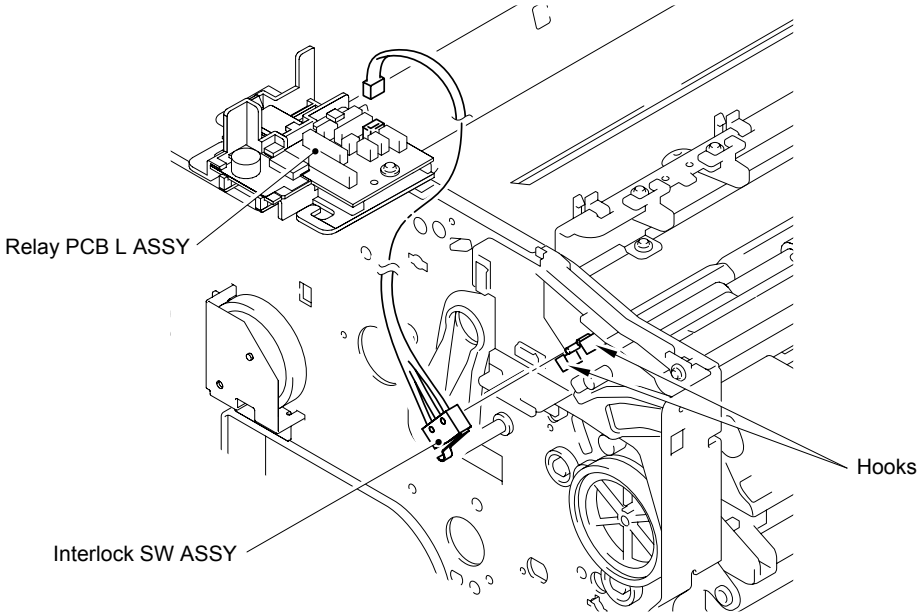

Fig. 4-81

3.32 Relay PCB L ASSY

(1) Disconnect the all connectors.

(2) Remove the cup S M3x6 Taptite screw, and remove the relay PCB L ASSY.

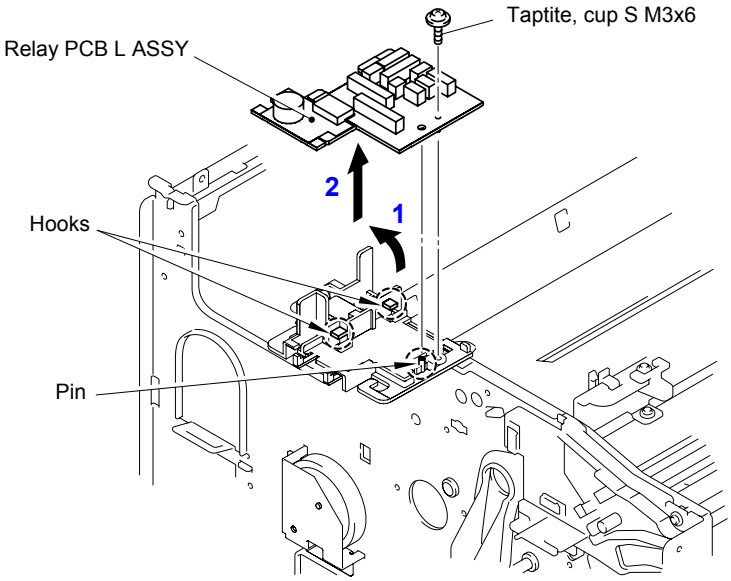

Fig. 4-82

3.33 DEV Sensor ASSY

(1) Release the hook, and remove the DEV switch holder.

(2) Release the hook, and remove the DEV sensor ASSY.

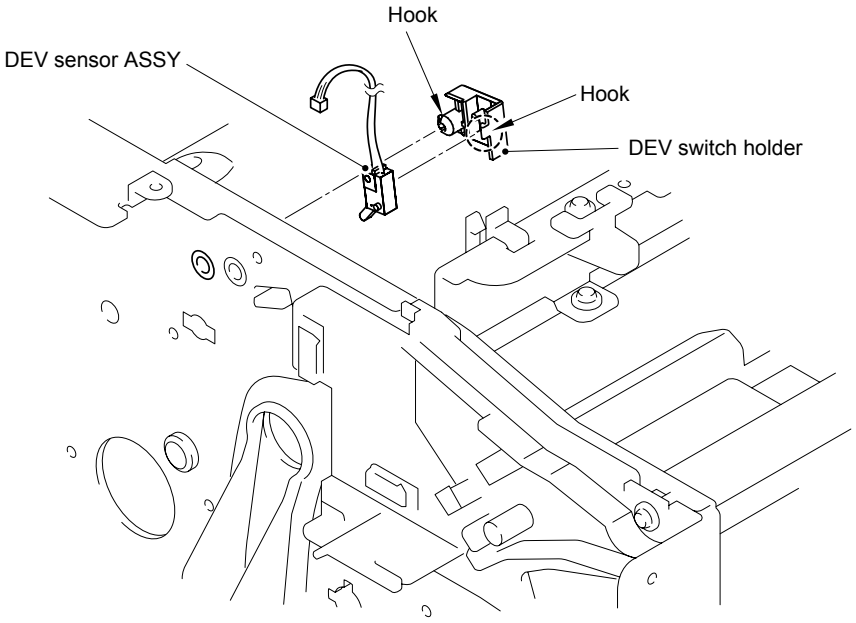

Fig. 4-83

3.34 Toner LED PCB ASSY

(1) Match the hook “A” with the orientation of the hole.

(2) Release the hook “B”, and remove the toner LED PCB ASSY.

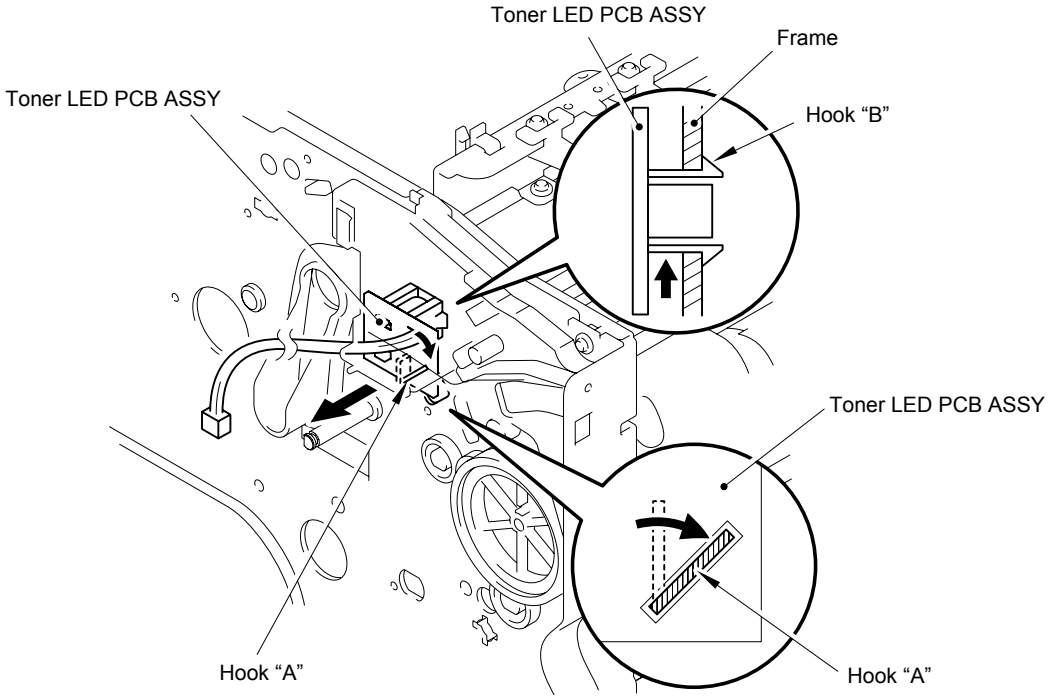

Fig. 4-84

3.35 Gear 18/48 / Gear Collar

(1) Remove the two cup S M3x6 Taptite screws, and remove the fixing drive plate unit.

(2) Remove the gear collar from the fixing drive plate unit, and remove the gear 18/48.

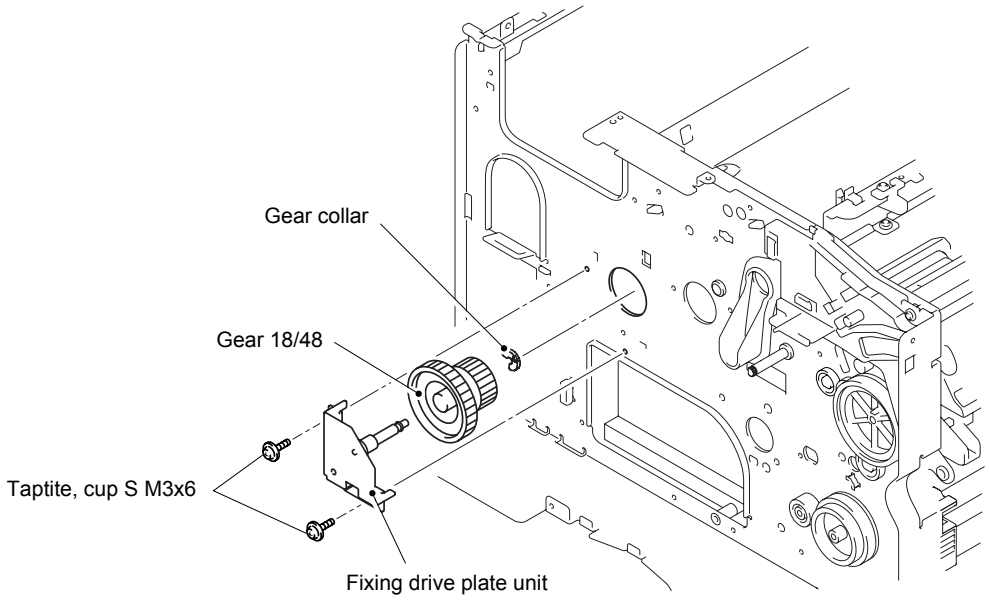

Fig. 4-85

3.36 Gear 24

(1) Release the hook, and remove the gear 24.

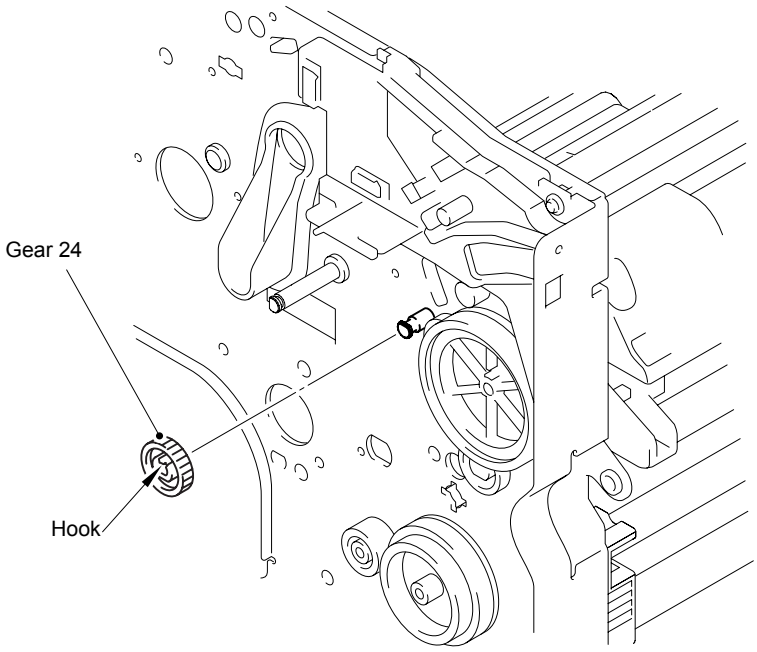

Fig. 4-86

3.37 Plate Motor ASSY

(1) Remove the spring.

(2) Remove the two cup S M3x6 Taptite screws, and remove the tray guide left front.

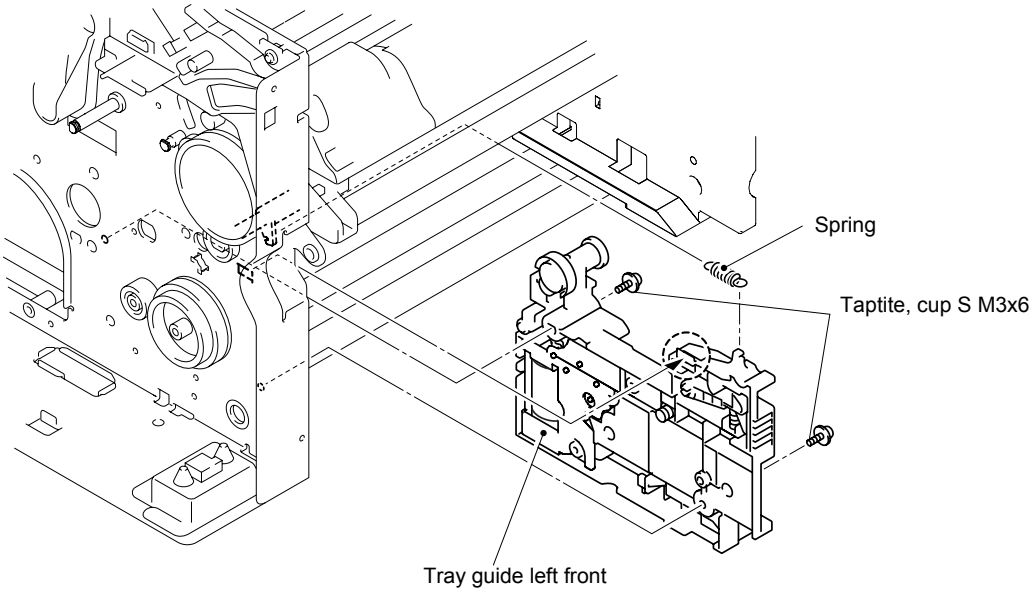

Fig. 4-87

(3) Remove the two bind B M4x10 Taptite screws, and remove the motor gear plate ASSY.

(4) Remove the bind M3x4 screw, and remove the plate motor ASSY.

(5) Remove the worm gear from the plate motor ASSY.

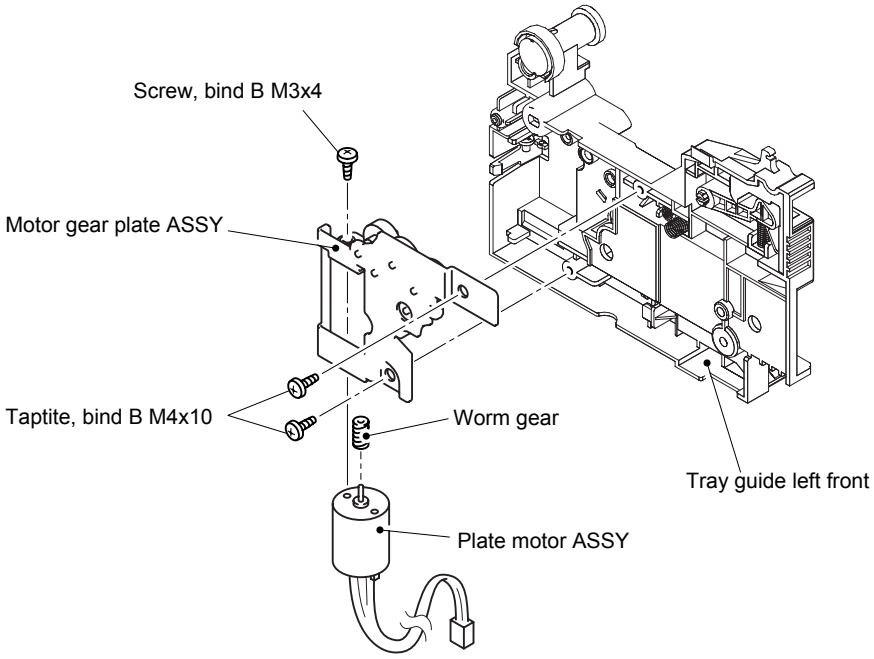

Fig. 4-88

3.38 DX Sensor PCB

(1) Remove the three bind B M4x10 Taptite screws and cup S M3x6 Taptite screw, and remove the base plate.

(2) Disconnect the connector from the sensor relay PCB ASSY.

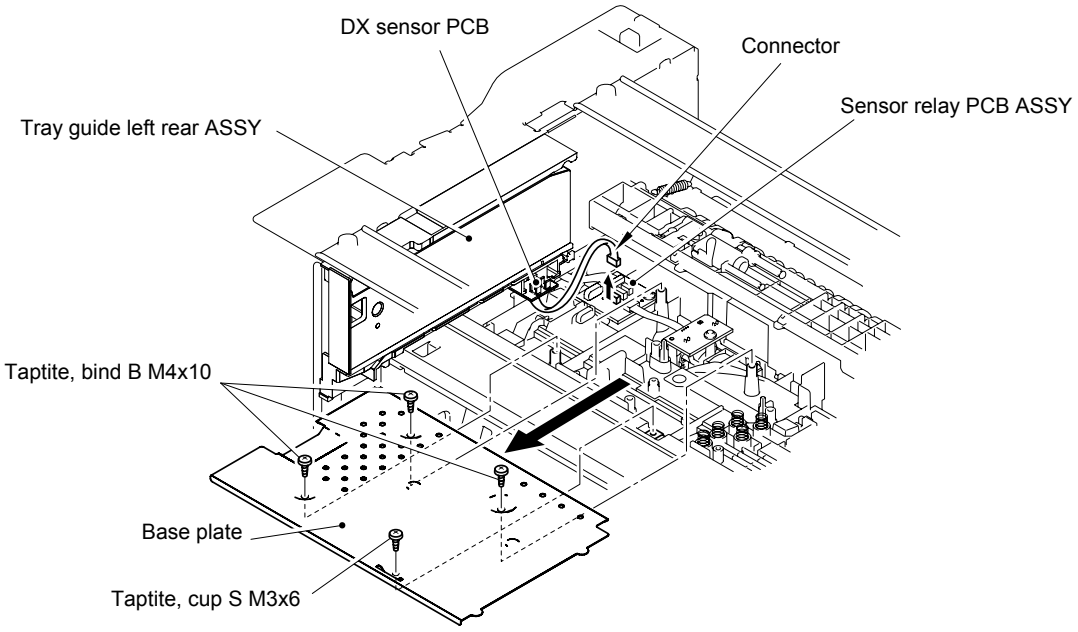

Fig. 4-89

(3) Remove the three cup S M3x6 Taptite screws, and remove the tray guide left rear ASSY.

(4) Remove the bind M3x8 Taptite screw, and remove the DX sensor PCB.

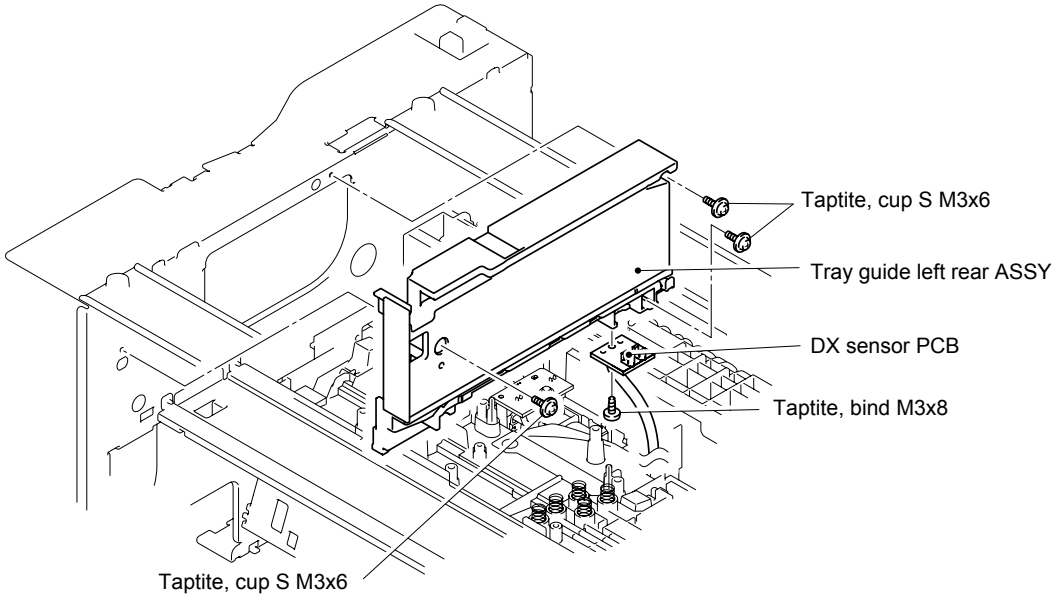

Fig. 4-90

3.39 Ejection Solenoid ASSY

(1) Disconnect the connector from the relay PCB R ASSY.

(2) Remove the three cup S M3x6 Taptite screws, and remove the ejection gear plate unit.

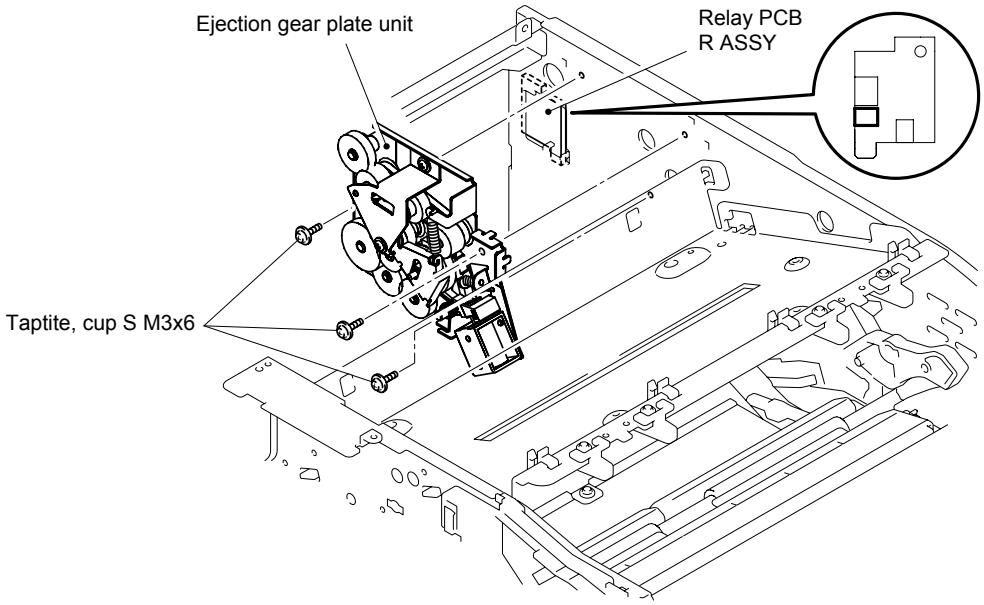

Fig. 4-91

(3) Remove the flanged M3x3.5 screw, and remove the ejection solenoid ASSY.

(4) Remove the solenoid damper from the ejection solenoid lever.

NOTE:

Remove the solenoid damper as shown in the figure.

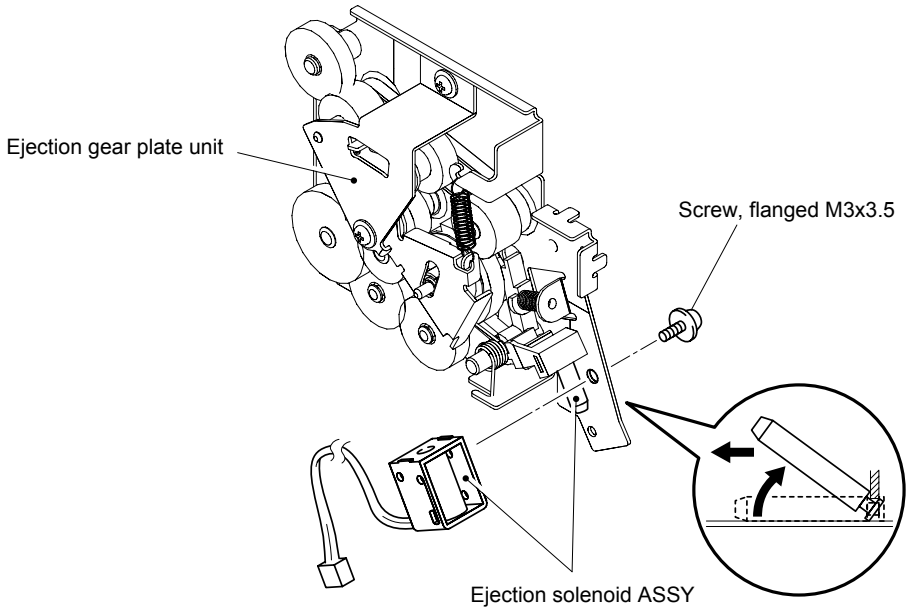

Fig. 4-92

3.40 Size SW PCB ASSY / Size SW Spring

(1) Remove the two cup S M3x6 Taptite screws, and remove the tray guide right rear.

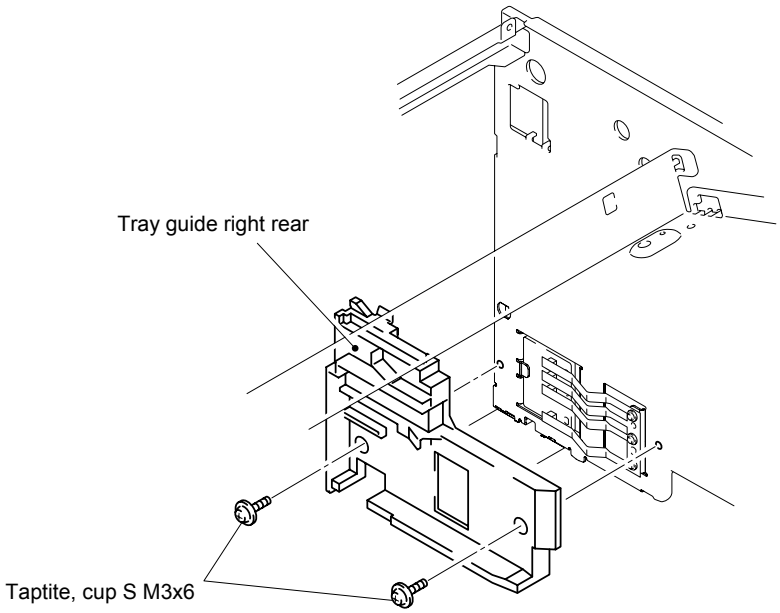

Fig. 4-93

(2) Remove the three cup S M3x6 Taptite screws, and remove the size SW spring.

(3) Disconnect the connector from the relay PCB R ASSY.

(4) Remove the cup S M3x6 Taptite screw, and remove the size SW PCB ASSY.

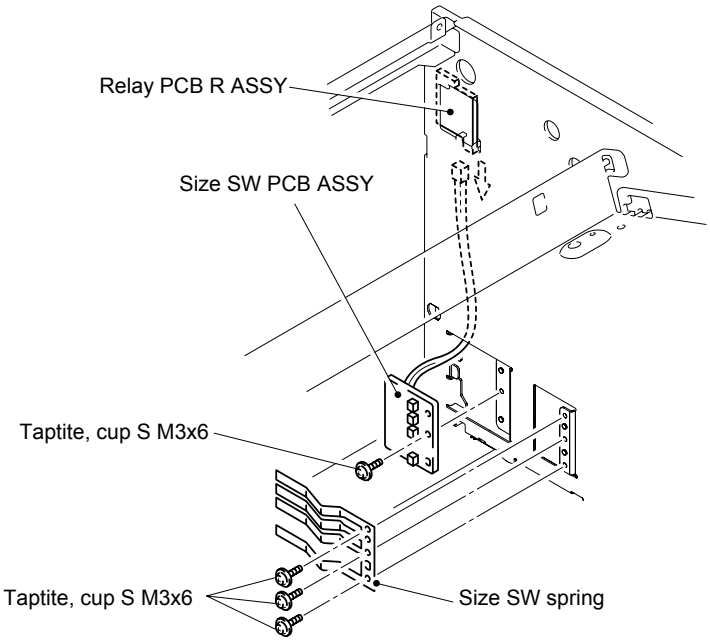

Fig. 4-94

3.41 Toner Sensor PCB Unit

(1) Remove the cup S M3x6 Taptite screw, and remove the toner sensor PCB unit.

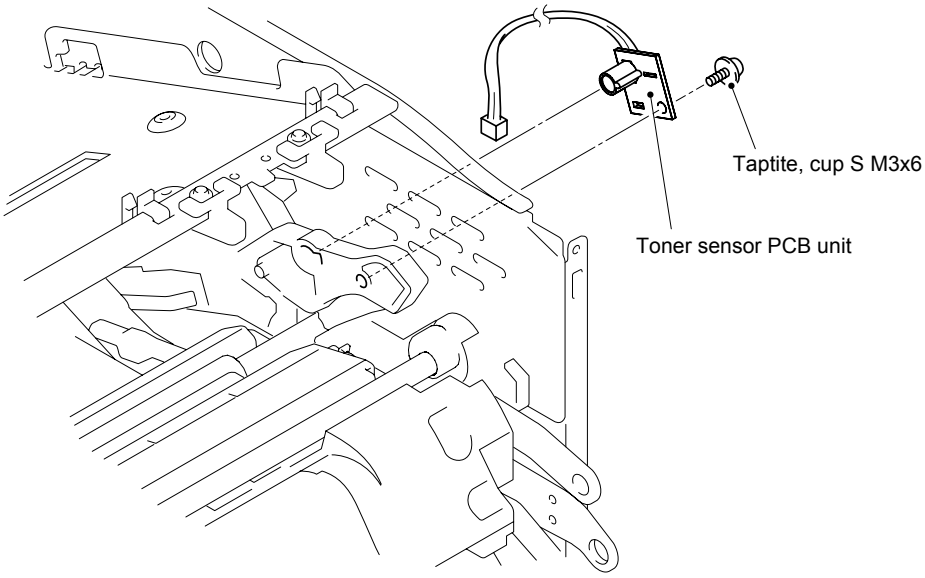

Fig. 4-95

3.42 HVPS PCB ASSY

(1) Remove the two bind B M4x10 Taptite screws, and remove the insulation sheet HVPS.

(2) Disconnect the connector from the HVPS PCB ASSY.

(3) Remove the two bind B M4x10 Taptite screws, and remove the HVPS PCB ASSY.

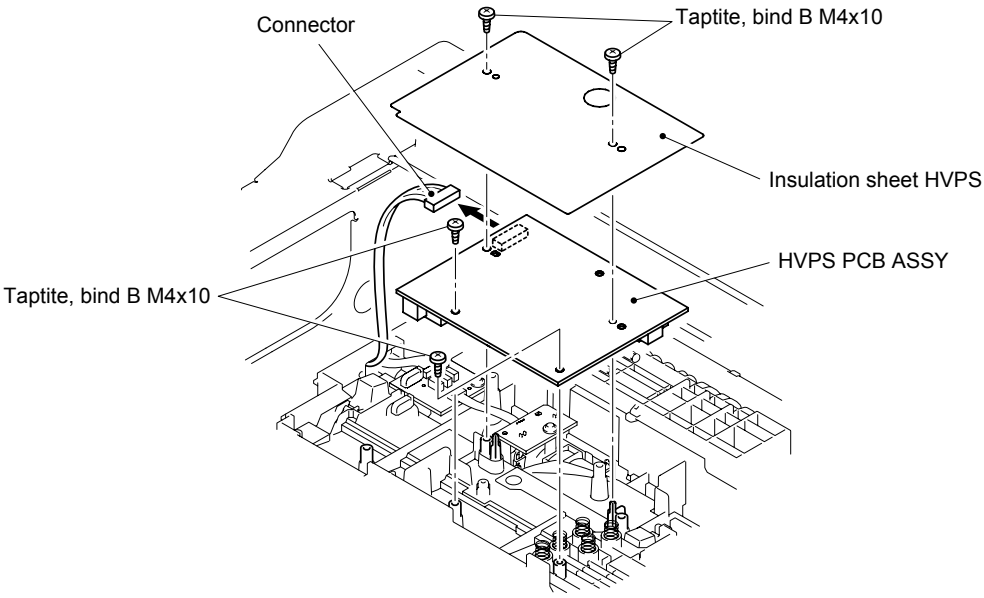

Fig. 4-96

3.43 Relay PCB Unit

(1) Disconnect the all connectors.

(2) Remove the cup B M3x8 Taptite screw. (Ground wire)

(3) Remove the two bind B M3x8 Taptite screws, and remove the relay PCB unit.

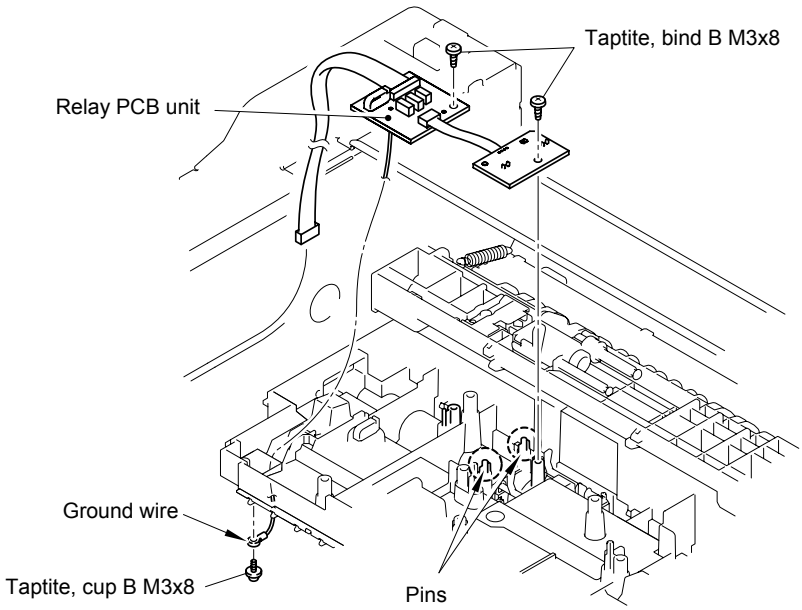

Fig. 4-97

3.44 Regist Actuator Front / Regist Actuator Rear / Regist Actuator Spring

(1) Release the hook, and remove the regist actuator front and regist actuator spring.

(2) Release the hook, and remove the regist actuator rear and regist actuator spring.

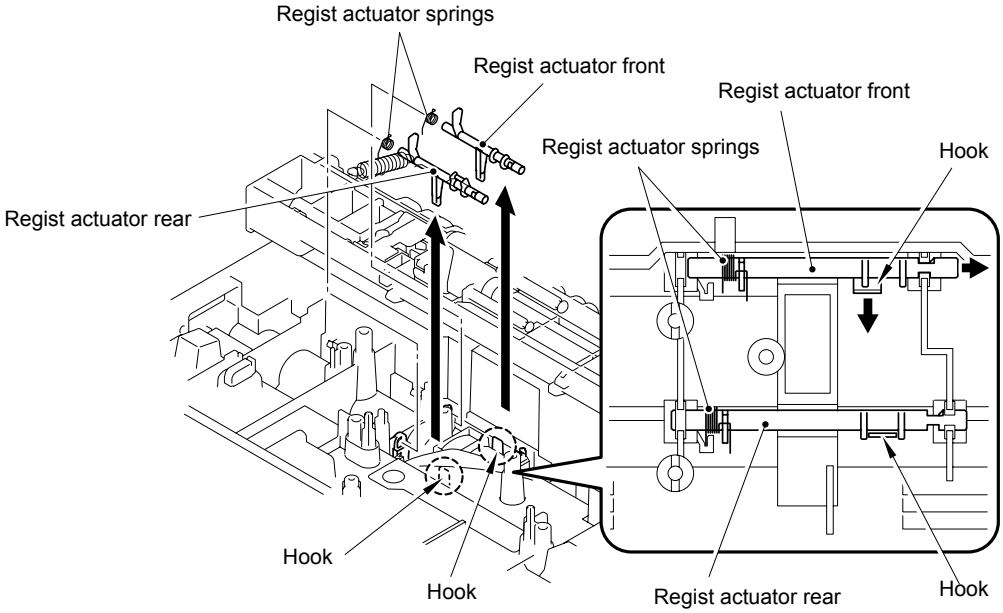

Fig. 4-98

3.45 PE/PO Sensor PCB ASSY

(1) Remove the four cup S M3x6 Taptite screws, and remove the under bar.

(2) Remove the bind B M3x8 Taptite screws, and remove the tray sensor PCB holder.

(3) Release the two hooks, and remove the PE/PO sensor PCB ASSY.

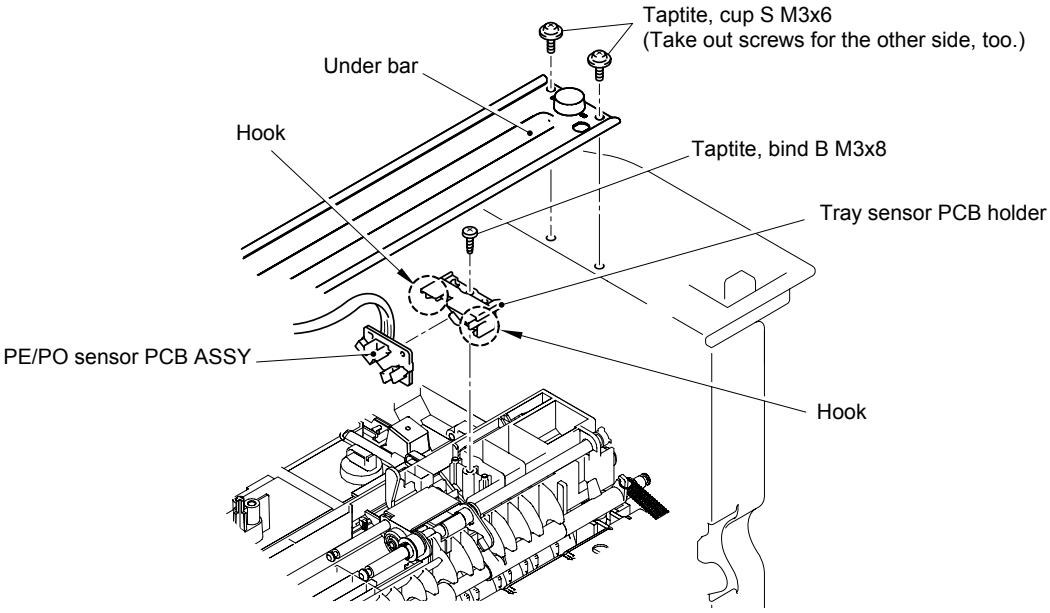

Fig. 4-99

3.46 Tray PE Actuator

(1) Release the hook, and remove the gear 33.

(2) Remove the FR bearing AML.

(3) Remove the collar 6.

(4) Remove the paper feed spring.

(5) Remove the paper feed holder ASSY.

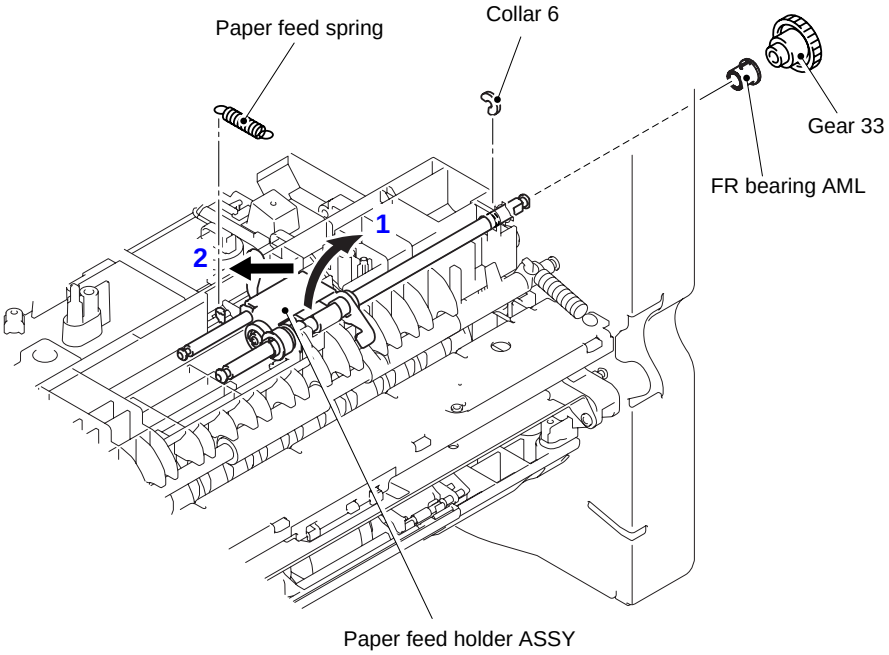

Fig. 4-100

(6) Remove the tray PE actuator from the paper feed holder ASSY.

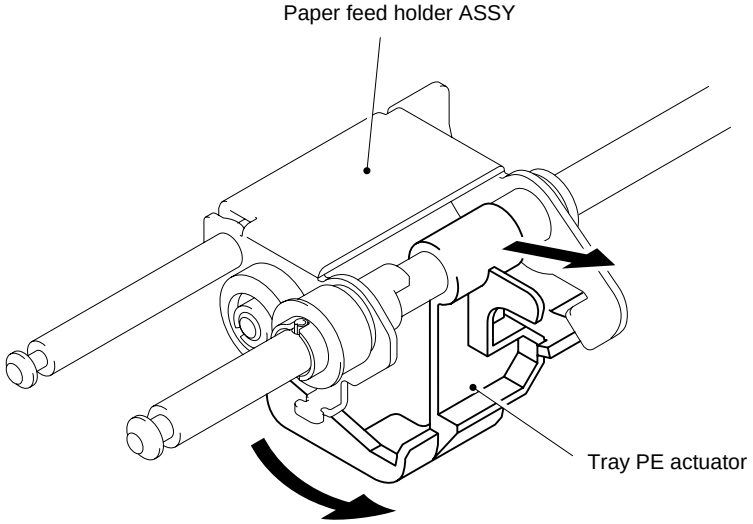

Fig. 4-101

(7) Remove the collar 6 and FR bush S.

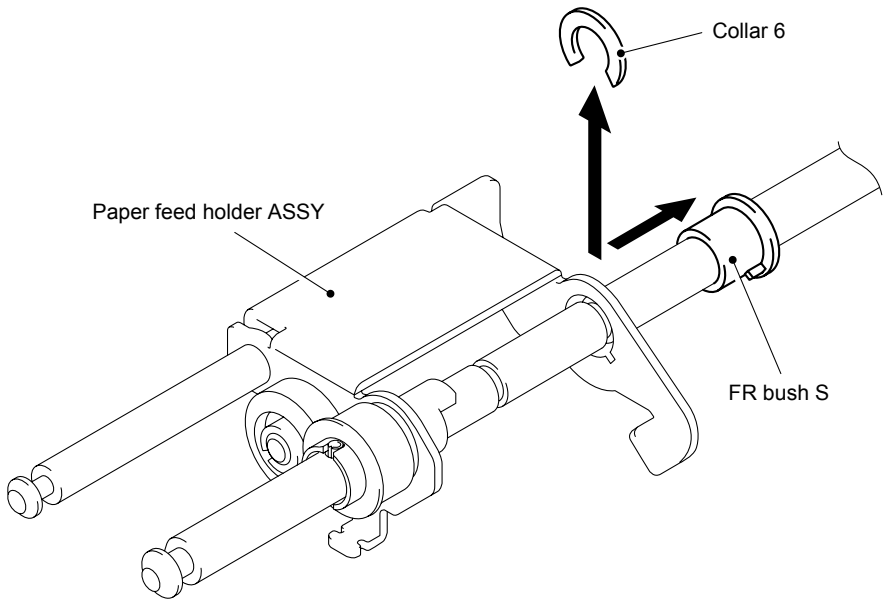

Fig. 4-102

NOTE:

When assembling the FR bush S, tray PE actuator or paper feed holder ASSY, make sure that there is no dirt, rust, extraneous substance, or scratch on the surface of the paper feed drive shaft and paper feed shaft.

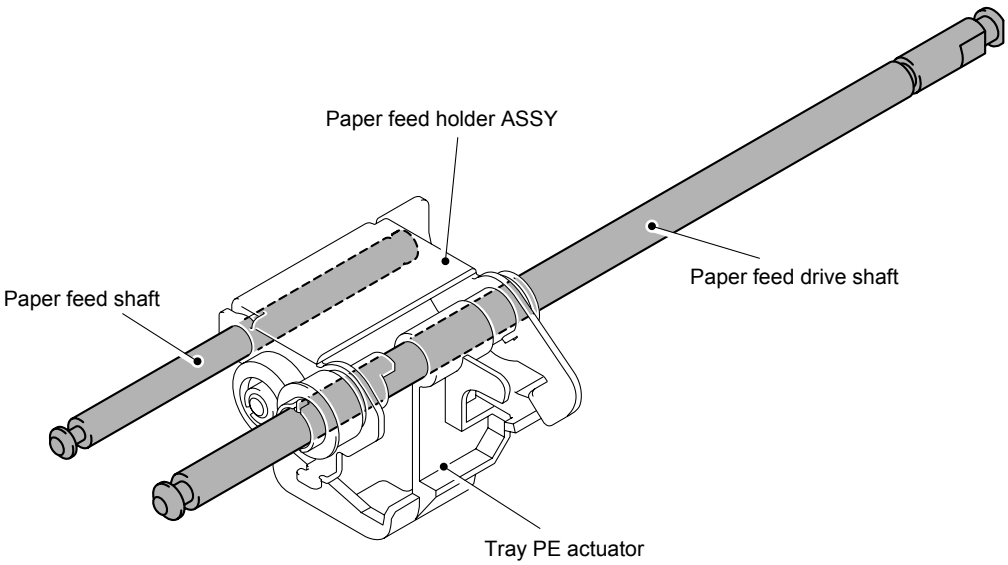

Fig. 4-103

3.47 RE Roller

(1) Remove the collar 6 and bearing A.

(2) Remove the collar 8 and bearing A.

(3) Remove the RE roller.

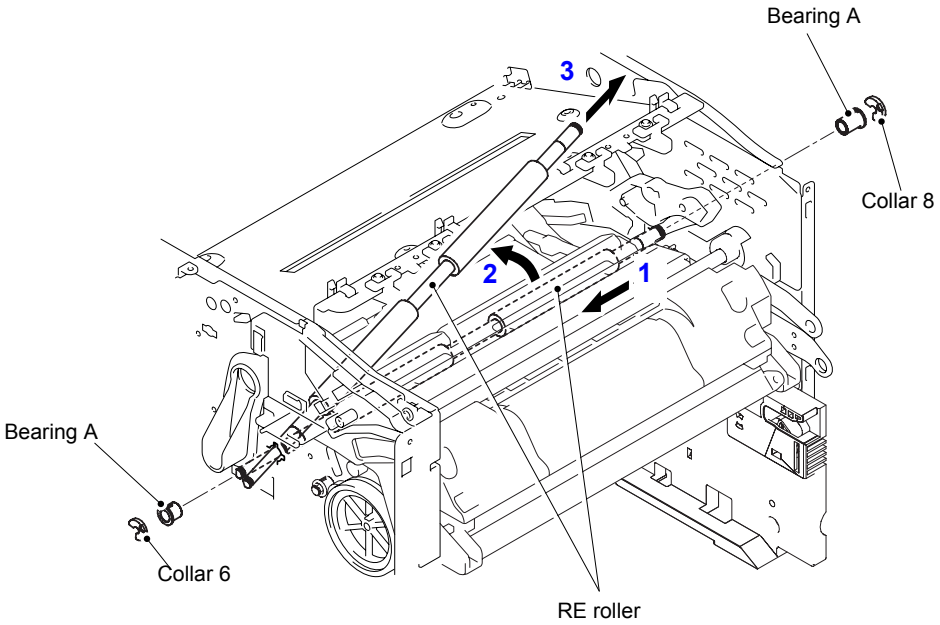

Fig. 4-104

3.48 F Chute Unit

(1) Press the left and right levers, and remove the F chute unit.

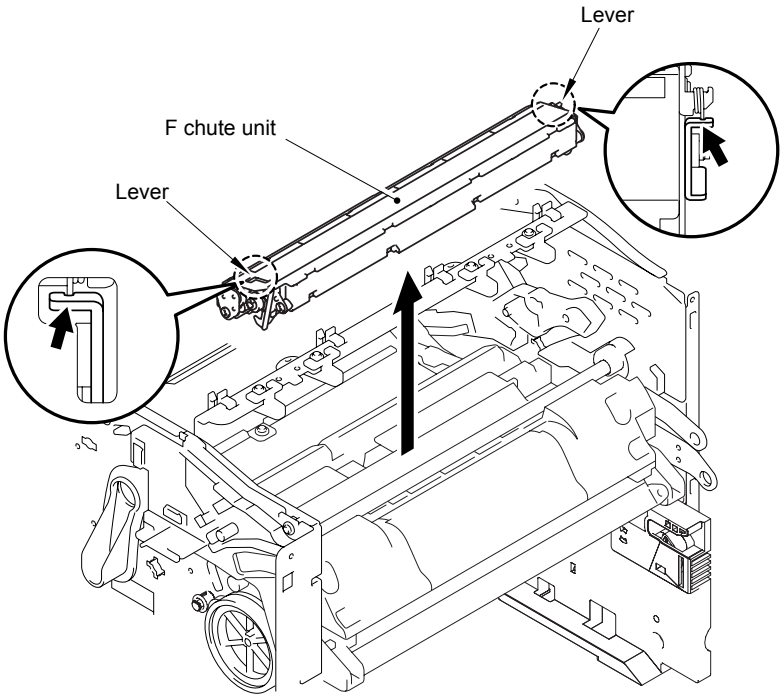

Fig. 4-105

3.49 MP-PE Sensor Actuator 1 / MP Sensor PCB ASSY

(1) Remove the drum lock lever spring.

(2) Release the hook, and remove the release bearing R.

(3) Remove the collar 6 and FR bearing AML, and remove the DEV release shaft and two DEV release cam.

(4) Remove the drum lock lever.

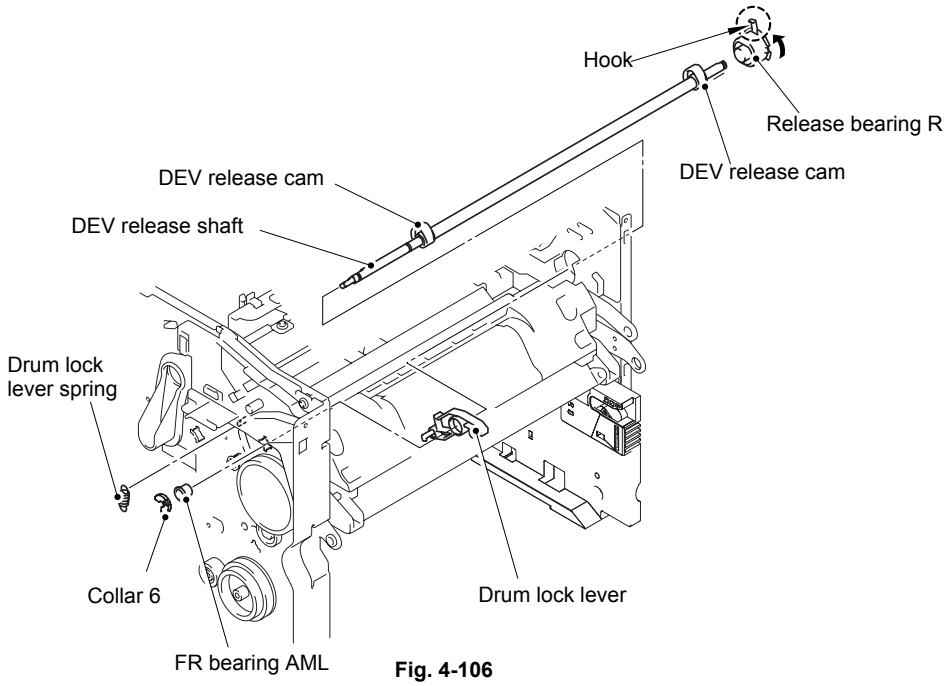

Fig. 4-106

(5) Release the hook, and remove the jam remove knob.

(6) Release the hook, and remove the gear 24.

(7) Remove the FR bearing AML.

(8) Remove the collar 4 and FR bearing AML TR, and remove the F roller AML.

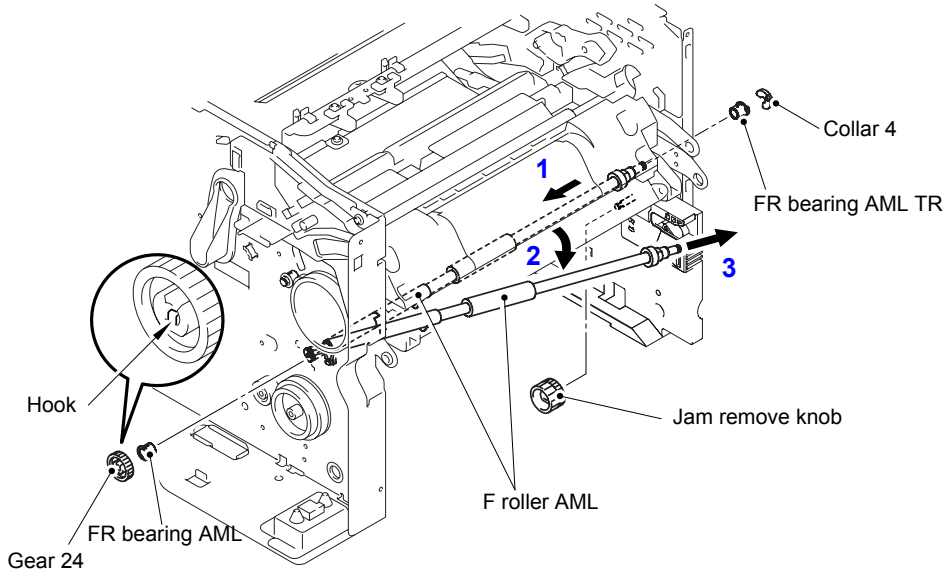

Fig. 4-107

(9) Release the hook, and remove the gear 24.

(10) Remove the FR bearing AML.

(11) Remove the collar 6 and FR bearing AML, and remove the F roller AML MP.

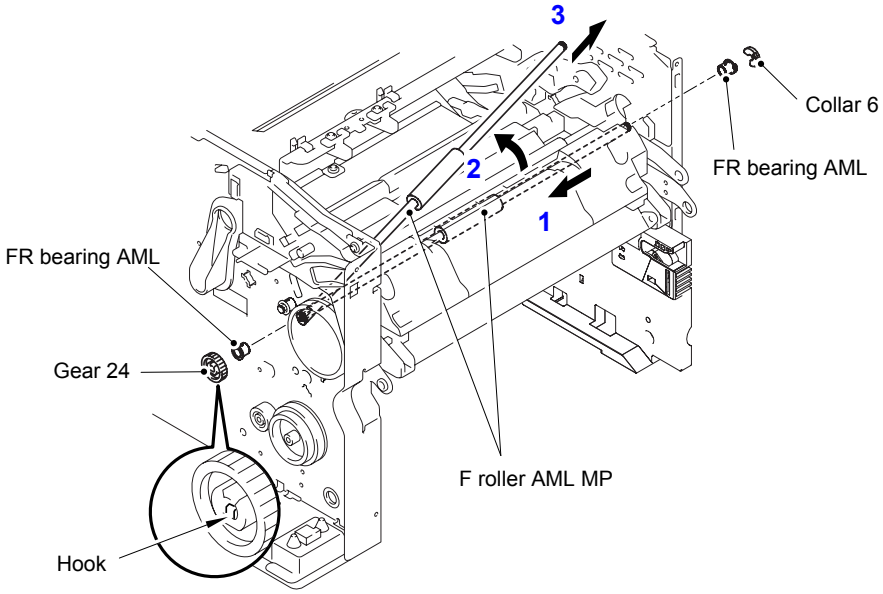

Fig. 4-108

(12) Remove the FR bearing AML.

(13) Remove the collar 6 and FR collar A4 R, and remove the F roller AML A4.

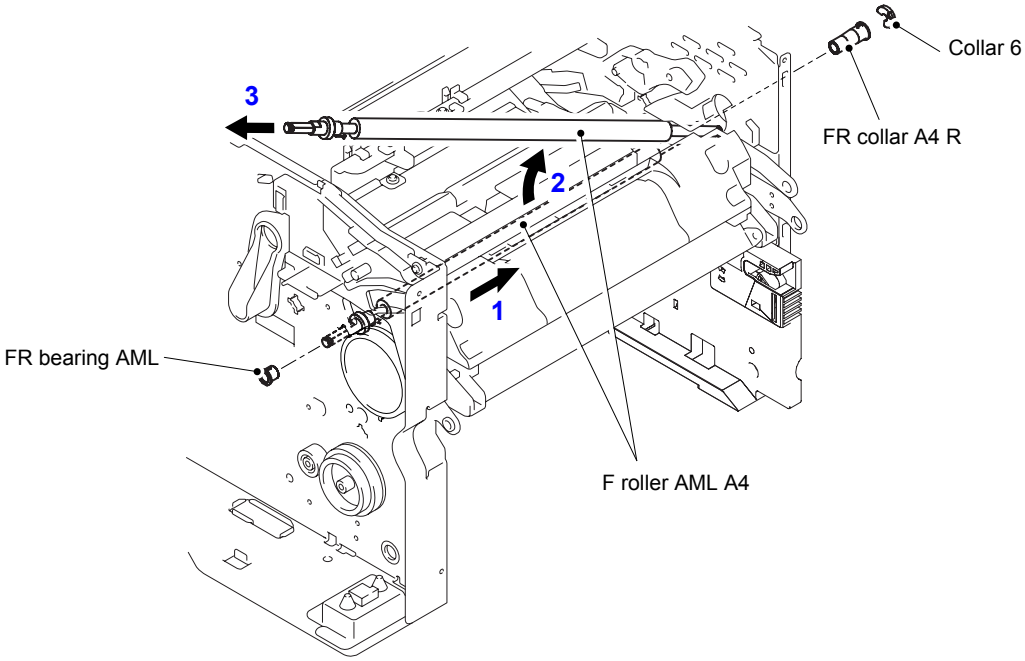

Fig. 4-109

(14) Remove the two cup S M3x6 Taptite screws of right side.

(15) Remove the paper feed frame unit.

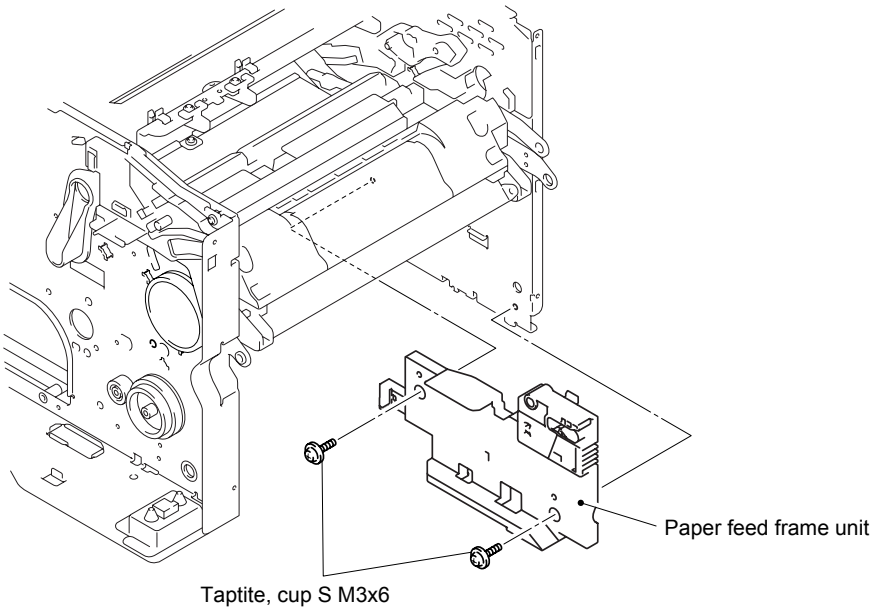

Fig. 4-110

(16) Remove the bind B M4x10 Taptite screw of left side.

(17) Remove the two cup S M3x6 Taptite screws, and remove the tray guide right front ASSY.

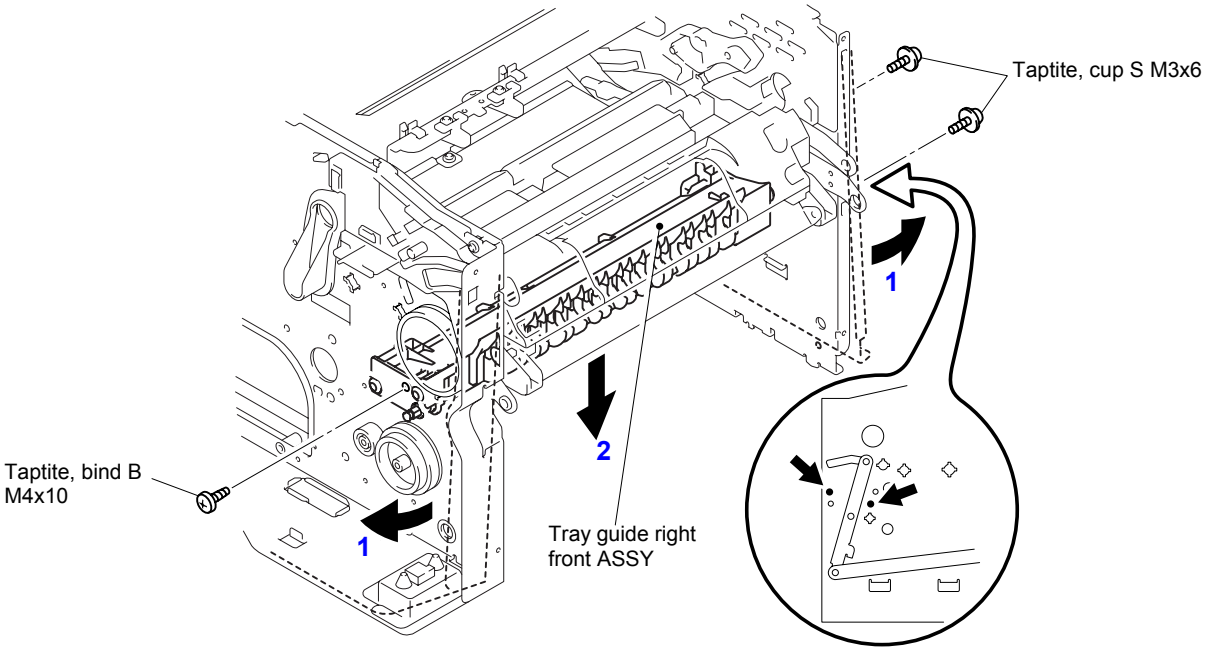

Fig. 4-111

(18) Remove the two bind B M3x10 Taptite screws from the MP chute.

(19) Remove the two MP pressure spring 25.

(20) Release the hook, and remove the gear 67 and conductor bearing 5.

(21) Lift the MP chute as shown in the figure.

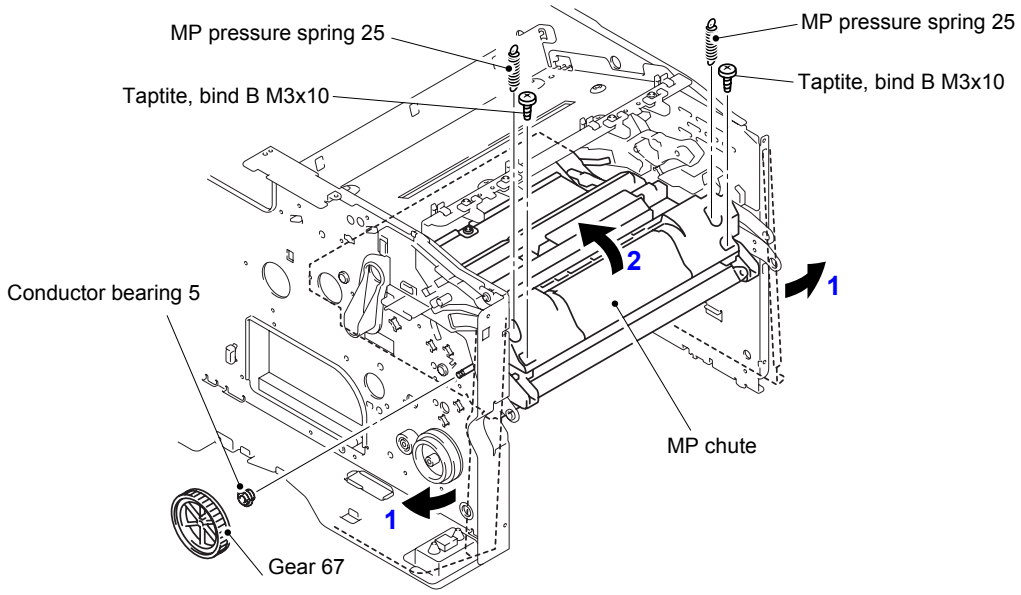

Fig. 4-112

(22) Release the hook, and remove the MP-PE sensor actuator 1.

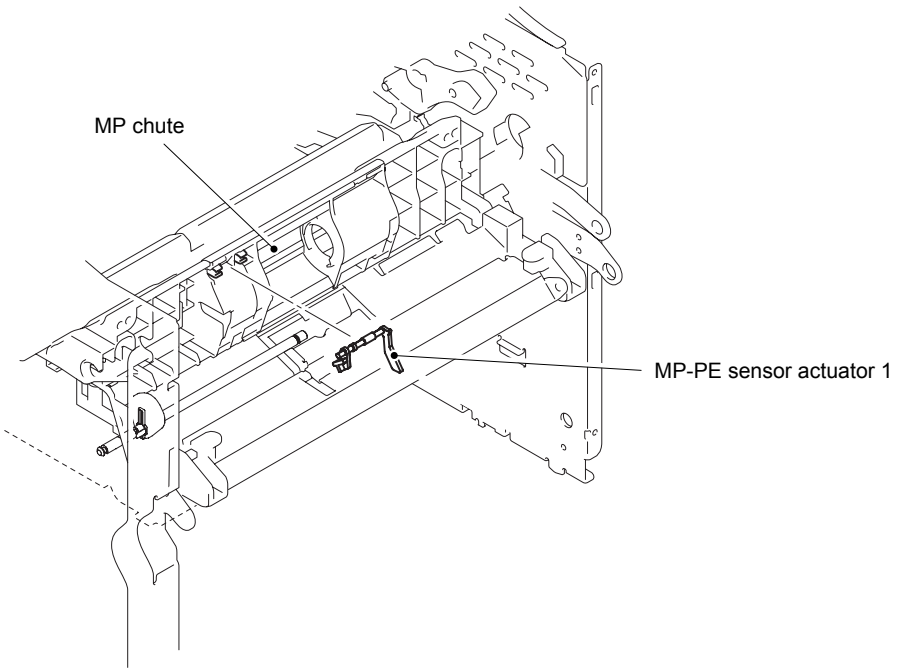

Fig. 4-113

(23) Remove the MP-PE sensor actuator 2 from the shaft.

(24) Remove the cup B M3x8 Taptite screw, and remove the MP sensor PCB ASSY.

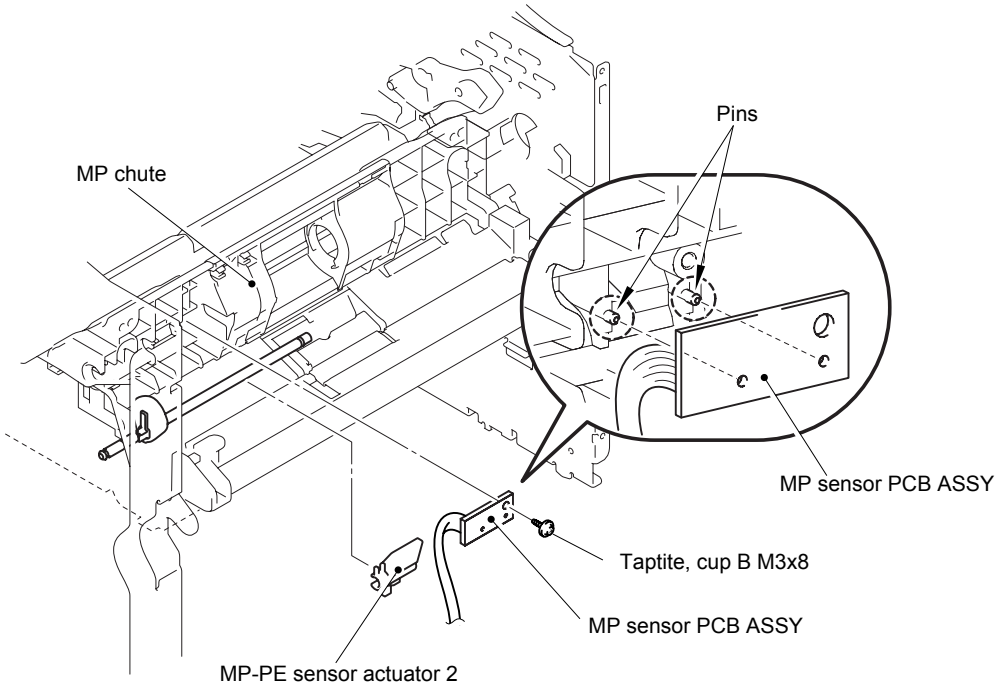

Fig. 4-114

4. PACKING

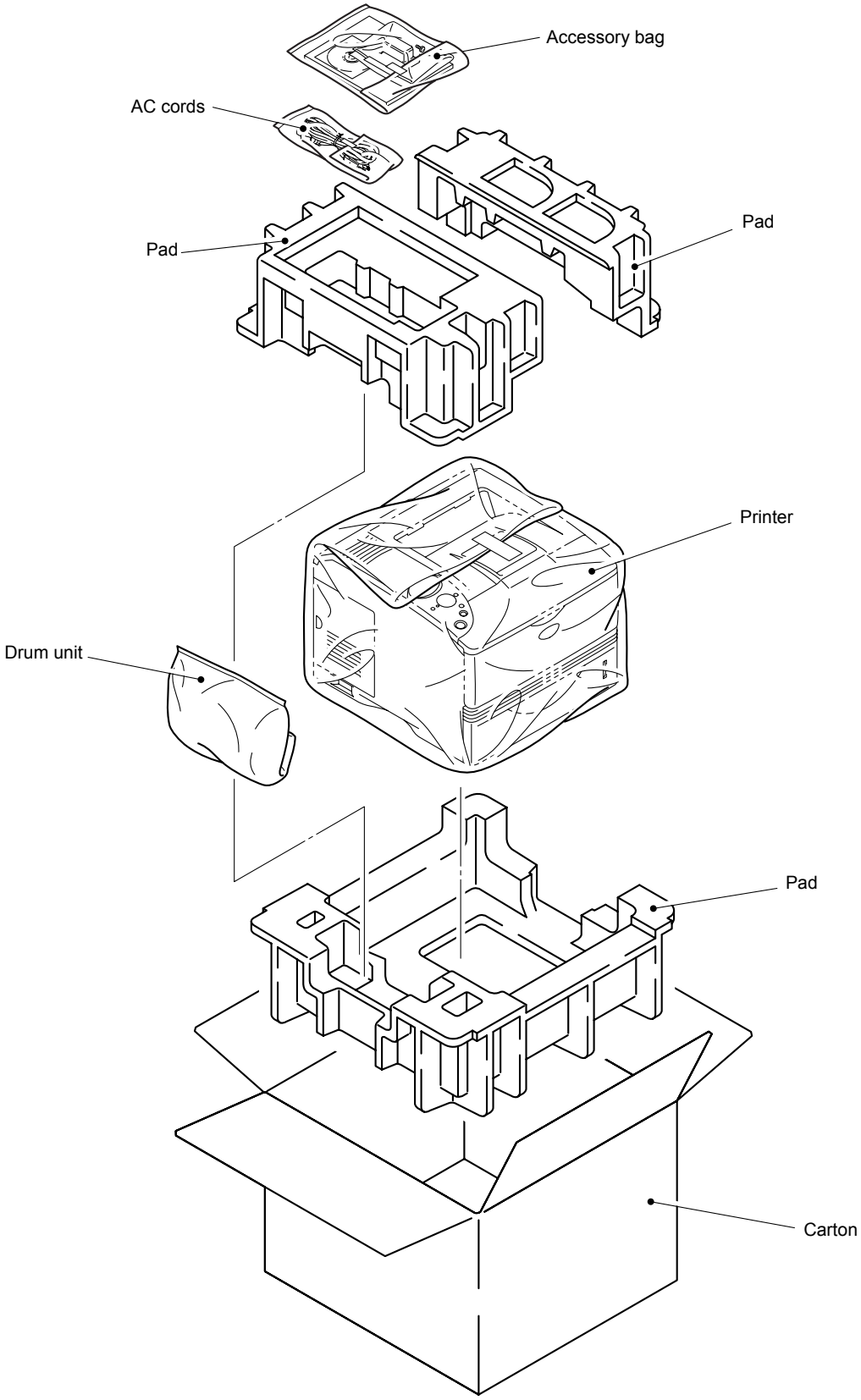

Fig. 4-115

5. GUIDELINES FOR LEAD FREE SOLDER

All components are soldered using lead free solder, be sure to use **lead free solder** that meets the following specification in the case of repair.

Lead free solder ; NIHON GENMA DHB-RMA3 NP303

(This can be distinguish from the lead free identification sign "LFH" on the MAIN PCB ASSY REV.)

However, the solder side of the MAIN PCB ASSY and other PCBs are soldered using lead content solder, use conventional lead content solder in the case of repair.

Since the reliability of soldering cannot be guaranteed if lead free solder and lead content solder are mixed, take care not to use the incorrect solder or mix the solder types.

Information on Manually Repairing PCB Soldered with Lead-Free Solder
This document provides information on how to correctly make manual repairs to a printed circuit board (PCB) soldered with lead-free solder.

1. Characteristics of lead-free solder
   Melting point higher than that of conventional tin-lead solder
   (Lead-free solder: approx. 220'C, Conventional tin-lead solder: approx. 180'C)
   Relatively poor solder wettability and spread (difficult to wet and spread), and hard
   Appearance (dull and grainy surface) different from that of conventional solder
   Relatively poor wettability, rough surface (bumps are likely to be formed), and solder dragging
   Poor solder elevation
   Poor thermal conductivity and heat resistant (difficult to melt)

2. Metal composition & wire solder
   The metal composition of lead-free solder allowed for use on PCBs for Brother's products is following.

LF Indication		Compositon	Manufacture r	Origin	Name
1		Sn/Ag/Cu	Nihon Genma	Japan	DHB-RMA3 NP303
H	only Component-side	Sn/Ag/Cu	Nihon Genma	Japan	DHB-RMA3 NP303

   We use wire solder which is indicated by digit after LF indication on PCB.
   Wire solder made in the contries except Japan are under investigation,and will be evaluated.

3. Appearance quality criteria
   The appearance of the surface of portions soldered with lead-free solder is basically the same as that for those soldered with conventional lead-tin solder, except for the following points.
   1) The surface of a portion soldered with lead-free solder is dull and not smooth.
   2) Shrinkage cracks can be observed on the surface of a portion soldered with lead-free solder. (They can be observed using a magnifying glass with approx. 10x magnification.)

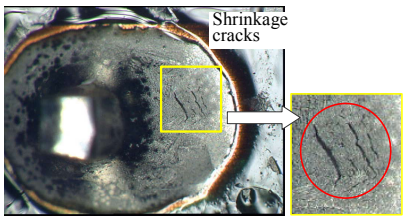

Figure 1 Shrinkage Cracks

4. Identification of lead-free solder on PCBs
   For PCBs that use lead-free solder, "LF" is indicated by silk-screen printing or attaching a label. "LF" stands for lead free and indicates that the PCBs bearing such an indication have been soldered with lead-free solder. A digit is given in a box following "LF" if produced by silk-screen printing or follows "LF" without a box on an attached label, the digit indicating the metal composition and wire solder.

5. Precautions for hand soldering operations
   1) Soldering operations using lead-free solder are basically the same as those using tin-lead solder, however, due to the lead-free solder's characteristics of being difficult to melt, wet, and spread, as well as being hard, a soldering iron needs to be applied for a longer period of time than when soldering with conventional tin-lead solder. While soldering is being performed, it must be confirmed that the lead-free solder is spreading. When solder needs to be added when repairing PCBs, the solder must only be added after sufficiently melting the previously soldered area. When poor soldering is repaired, the solder of the poorly soldered area must be sufficiently removed and lead-free solder newly supplied.
   2) Before starting soldering operations, it must be determined whether or not the PCB has an "LF" indication. If the PCB has an "LF" indication, lead-free solder corresponding to the digit following "LF" must be used. Conventional solder including lead (tin-lead solder) must not be used on a PCB that has an "LF" indication. (Use of tin-lead solder on a PCB having an "LF" indication is prohibited.)
   3) A soldering iron for exclusive use with lead-free solder must only be used; a soldering iron used for soldering with tin-lead solder must not be used with lead-free solder. The use of soldering irons designed for lead-free solder is desirable (see "7. Soldering iron" below).
   4) The requirement for the temperature of the soldering iron’s tip is the same as that for soldering using conventional solder; the temperature of the soldering iron's tip must not be raised even though the melting point of the lead-free solder is higher. The temperature of the soldering iron's tip is restricted to the temperature that the component to be soldered can resist. It should be noted that the temperature that the components to be soldered with lead-free solder can resist has not increased even though the melting point of the solder has.
   5) A soldering iron must be correctly applied.
      Even though the melting point of the solder has increased, soldering operations must be performed with the soldering iron’s tip at the same temperature as prescribed before. Therefore, heat needs to be effectively applied from the tip of the soldering iron to the base metal. For effective heat application, the shape of the soldering iron's tip and application of the soldering iron (position and angle relative to the base metal) need to be more strictly controlled than before.
   6) The soldered point must be left as it is after the soldering iron is removed for a period of time longer than that required when soldering is performed with conventional solder.
      The amount of heat applied to the base metal increases due to the higher melting point of the lead-free solder, and the base metal is heated to higher temperatures. Consequently, it takes time for the melted solder to cool and to solidify and, therefore, the soldered area must be left as it is after the soldering iron is removed for a longer period of time.

7) A localized ventilation system and gloves are required for soldering operations. Lead-free solder does not contain the toxic substance lead, however, inhalation of the fumes may adversely affect the health of workers. The silver contained in lead-free solder is also a toxic substance, though it is not as toxic as lead, and, therefore, a localized ventilation system and gloves are required for lead-free solder soldering operations, as required for those with conventional solder.

6. Soldering irons
When soldering is performed manually using lead-free solder, a soldering iron that has little reduction in its temperature needs to be used. This refers to a soldering iron that has a smaller degree of decrease in the temperature at the soldering iron's tip, such as when the soldering iron is applied to the base metal or solder is supplied, and the temperature is soon returned to the specified temperature.
With soldering operations using lead-free solder, the requirement for the temperature of the soldering iron's tip is the same as that for conventional solder, however, the melting point of lead-free solder is higher than that of conventional solder so productivity will decrease with conventional soldering irons.
Some tool manufacturers sell soldering irons designed for lead-free solder and that can maintain the productivity of the soldering operations.
The soldering irons used at BIL are model no. 941 manufactured by HAKKO and M6-SIC-40 manufactured by BONKOTE. The prices of these soldering irons for use with lead-free solder are three to four times higher than those for conventional soldering irons with a temperature controller built in.

7. No mixing of different solders
When repairs are made on a PCB with an "LF" indication on it, lead-free solder with the same metal composition, which is expressed by the digit following "LF", must be used on a single PCB. For a PCB with an "LF" indication on it, neither tin-lead solder nor lead-free solder with a different metal composition must be used.

Compatible solder for each countries are listed below. Solders are freely available from each manufacturer. Visit the web site below for more detail.

Countries	Manufacturer	Origin	Name	Web site
For Japan, UK, Finland, Germany, France, Sweden	ALMIT	JAPAN	KR-19 SH RMA LFM-48	http://www.almit.com
For World wide except Australia, New Zealand	KESTER	U.S.A.	KESTER245 KESTER285	http://www.kester.com
For Worldwide	AIM	CANADA	CASTIN RMA2	http://www.aimsolder.com

6. LUBRICATION

Apply the specified lubricants to the lubrication points as shown below.

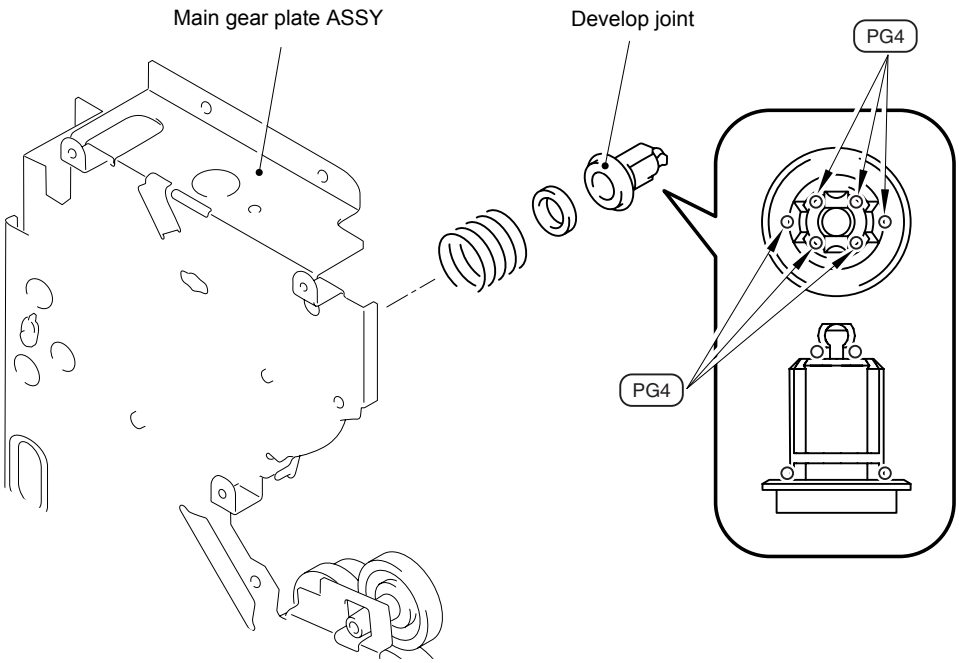

PG4: Grease PG-662Y
4mm dia. ball

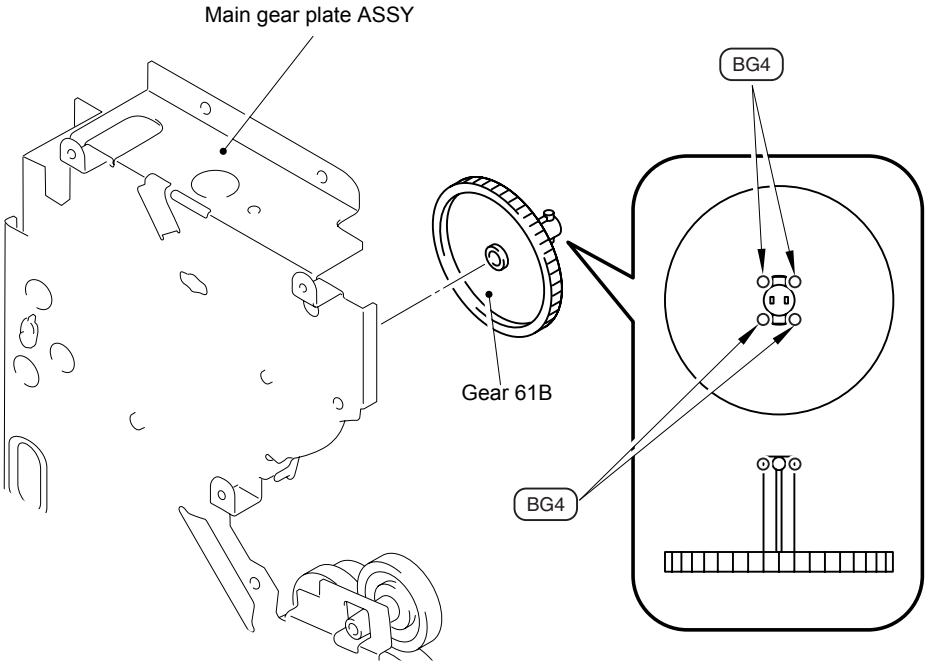

BG4: Grease BG-MS
4mm dia. ball

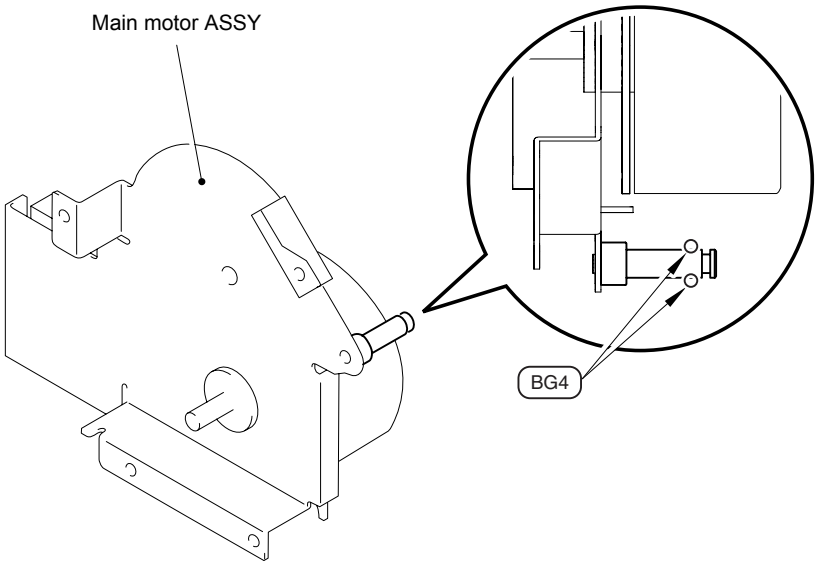

BG4: Grease BG-MS
4mm dia. ball

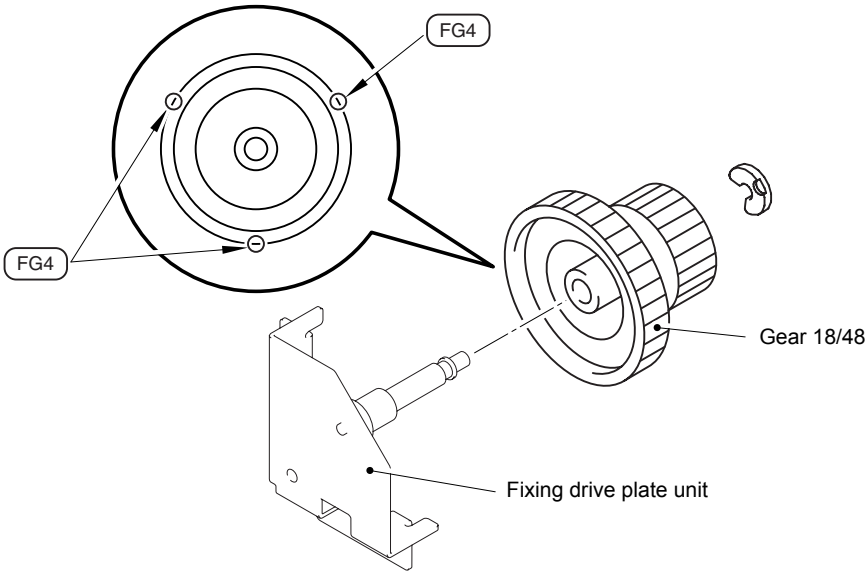

FG4: Grease FG-80H
4mm dia. ball

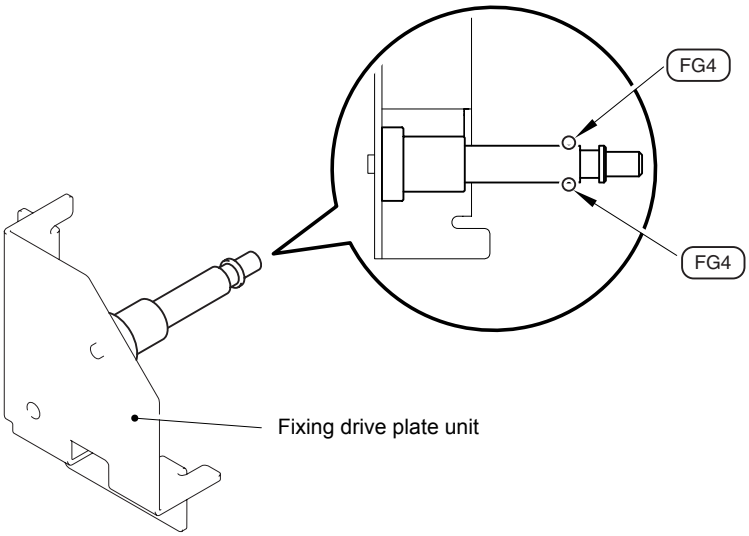

FG4: Grease FG-80H
4mm dia. ball

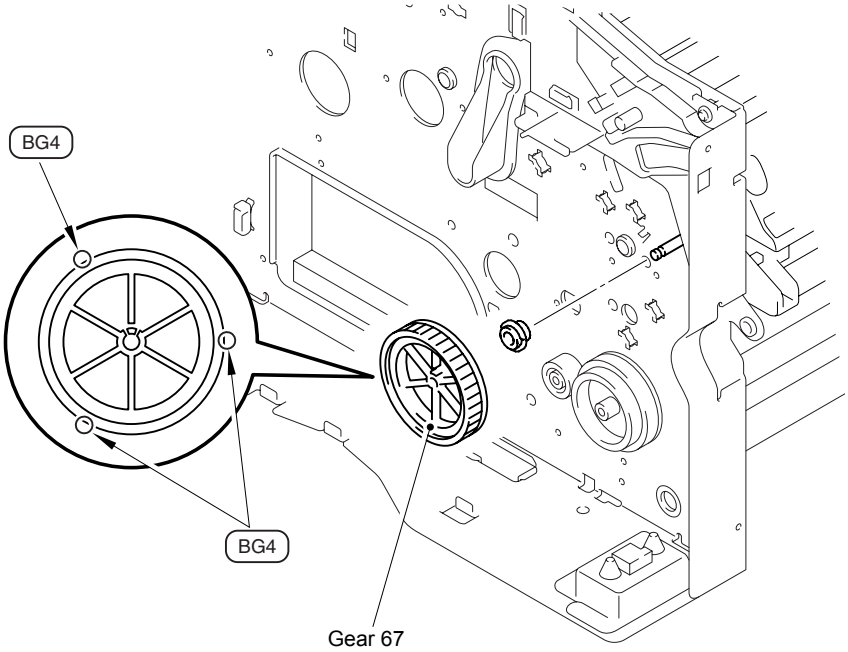

BG4: Grease BG-MS
4mm dia. ball

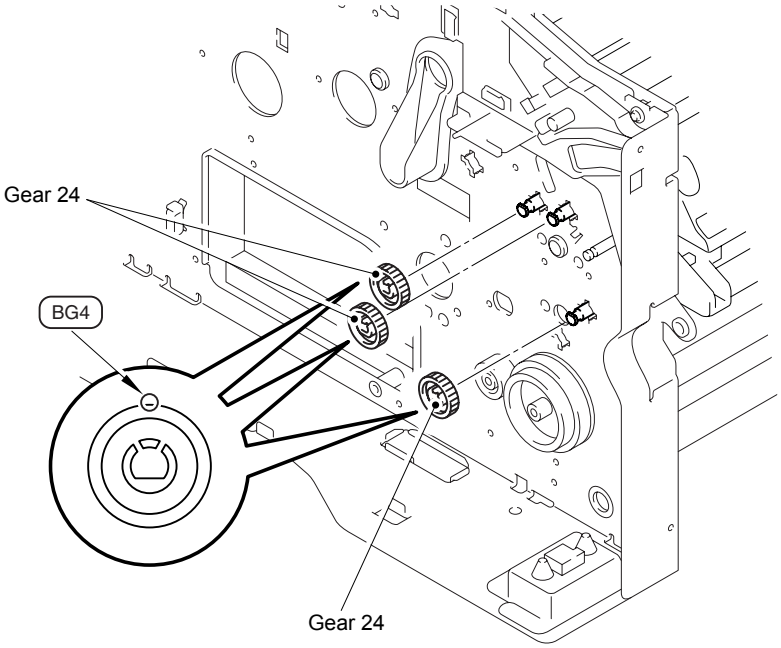

BG4: Grease BG-MS
4mm dia. ball

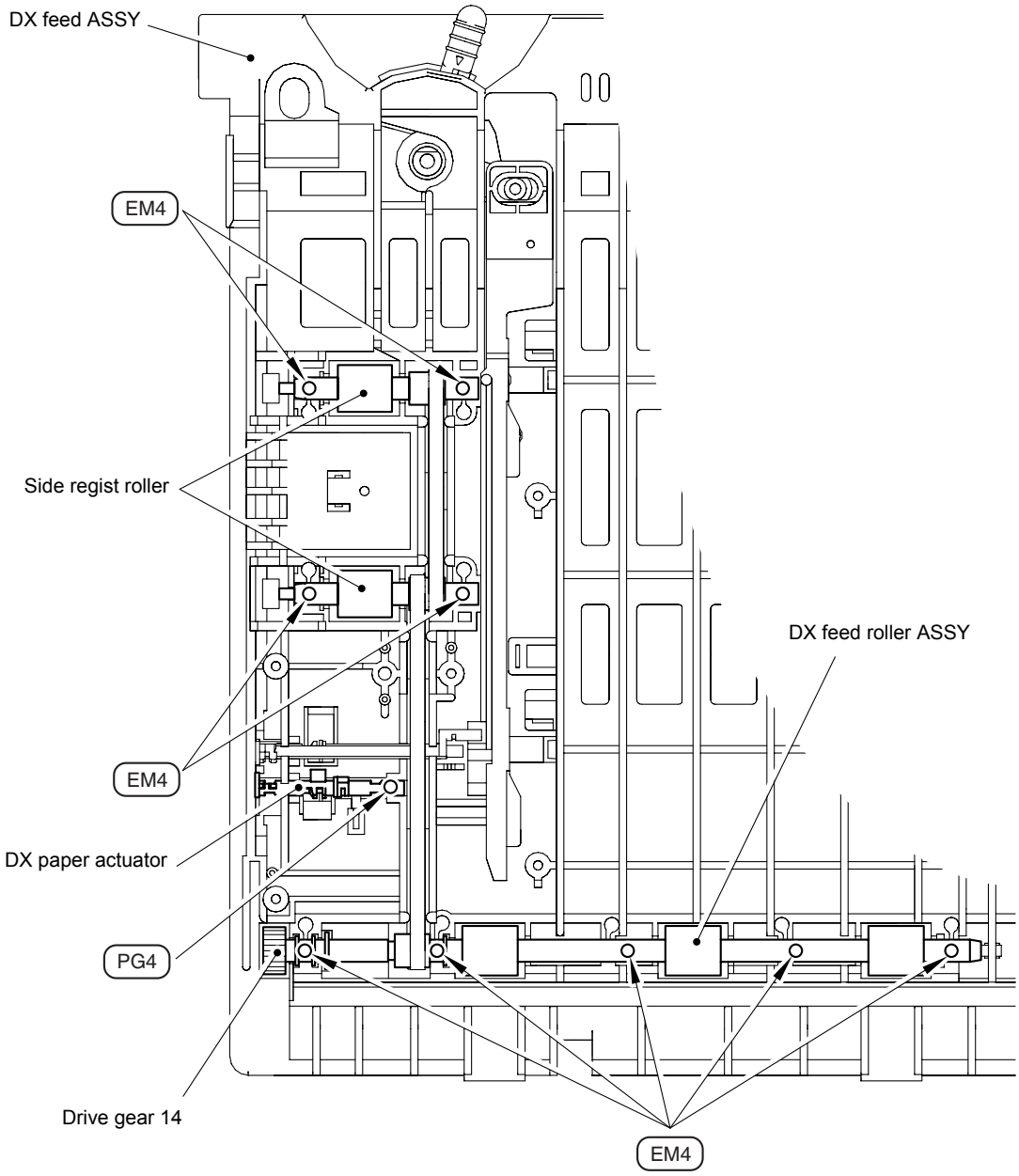

EM4: Grease EM-D110
4mm dia. ball

PG4: Grease PG-662Y
4mm dia. ball

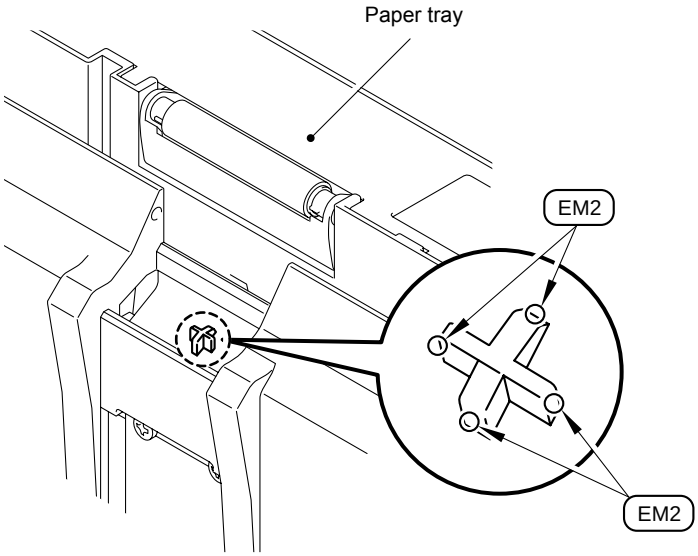

EM2: Grease EM-D110
2mm dia. ball

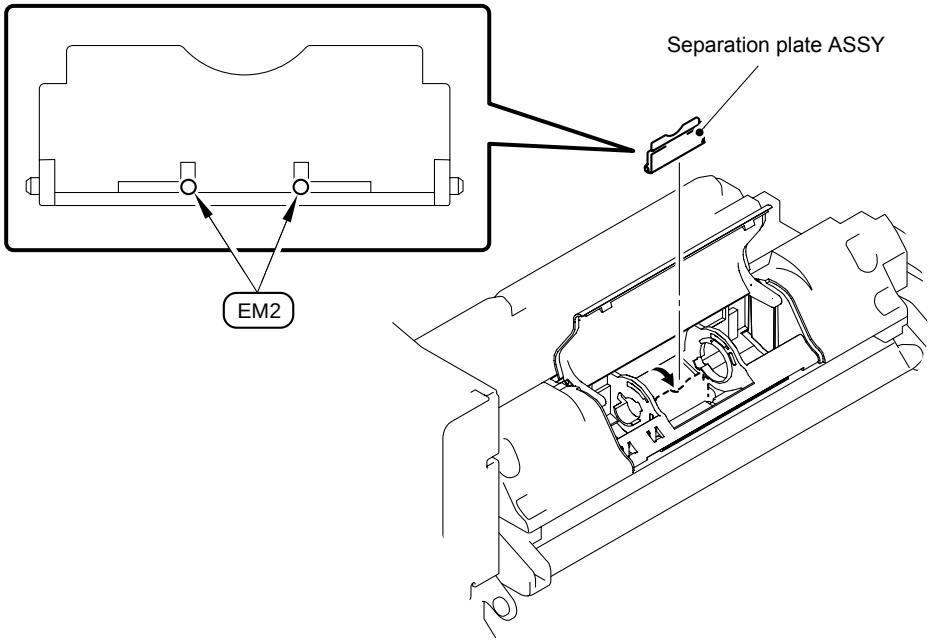

EM2: Grease EM-D110
2mm dia. ball

7. HARNESS ROUTING

1 · Exit roll unit

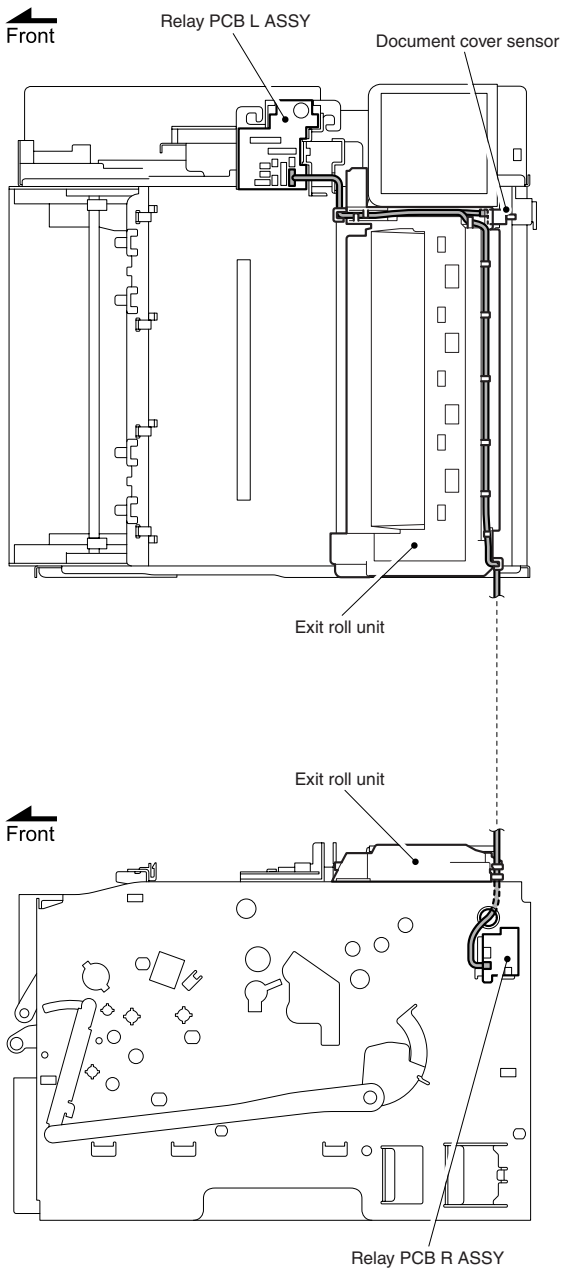

2 · Laser unit

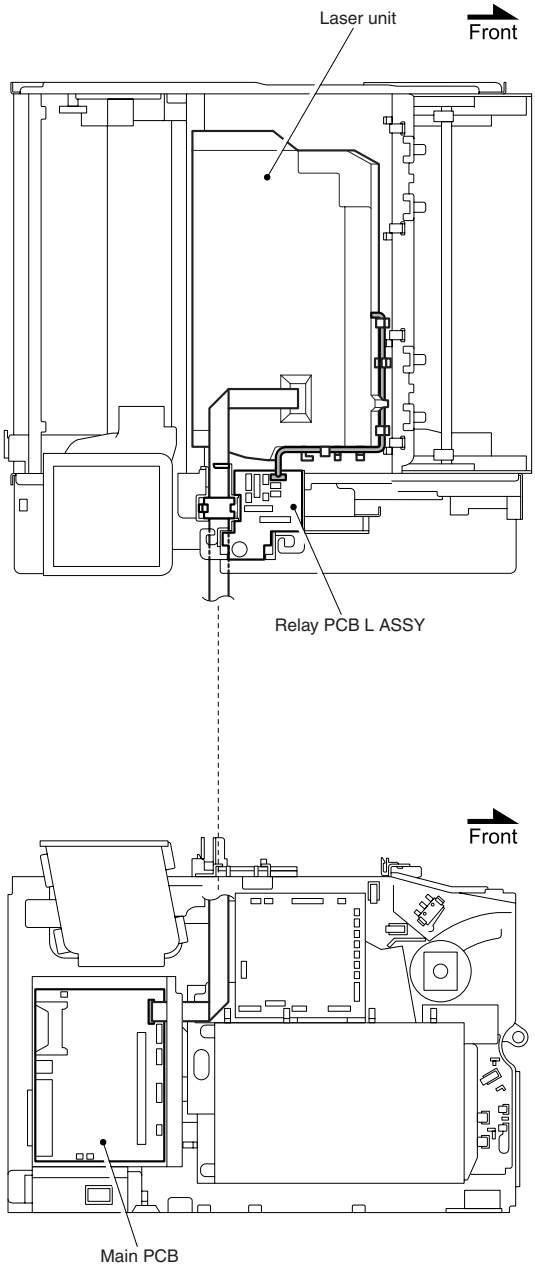

3	・Toner sensor PCB unit	4	・Relay PCB unit / HVPS PCB ASSY

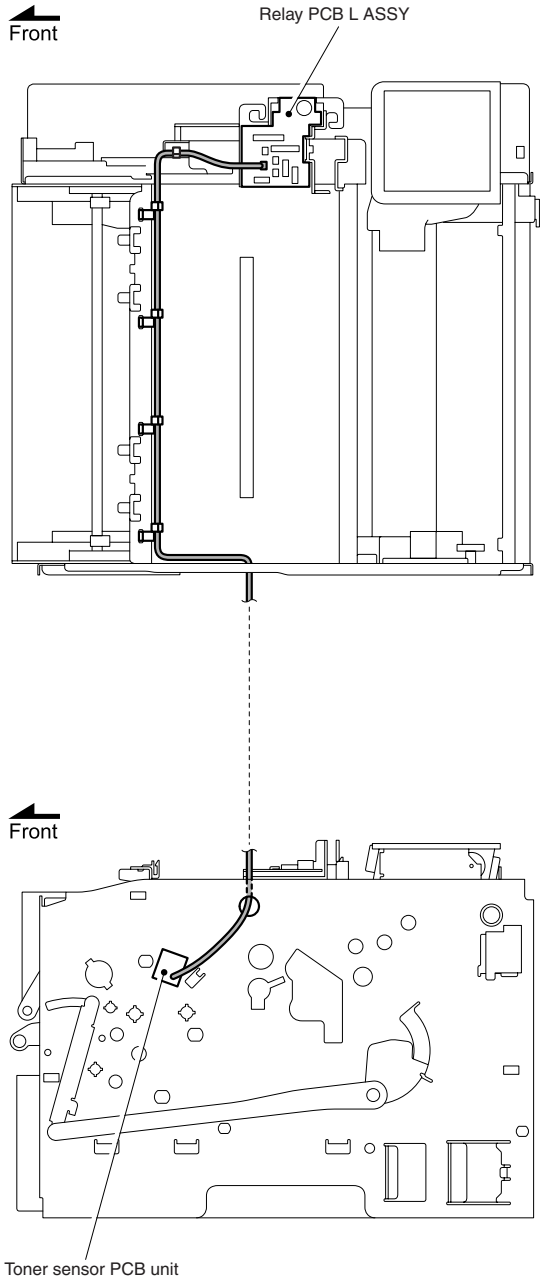

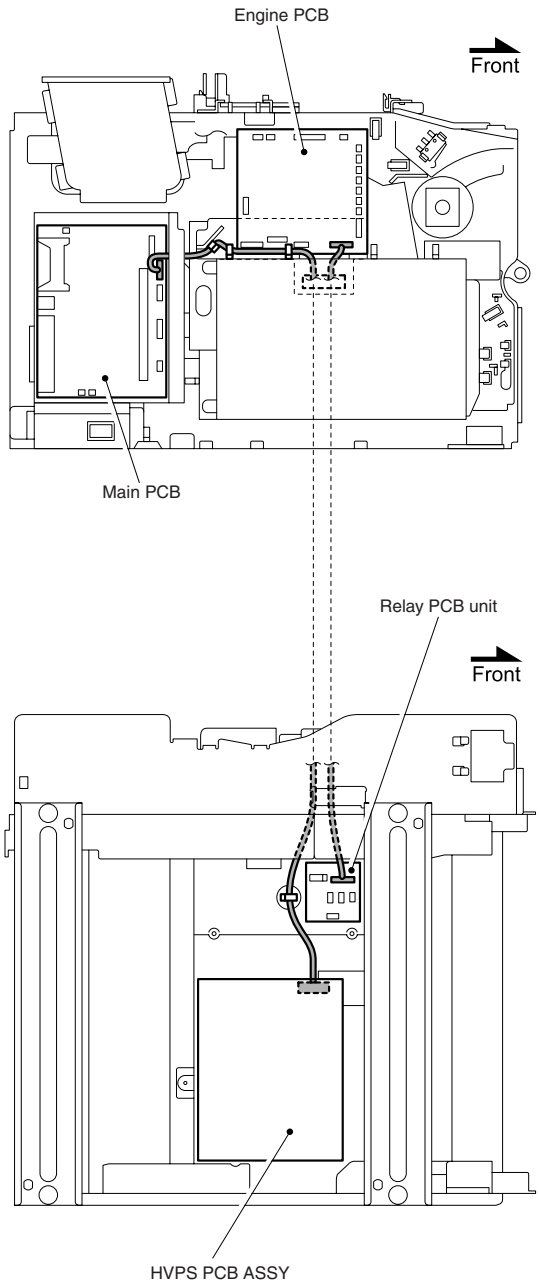

5 · Scanner fan

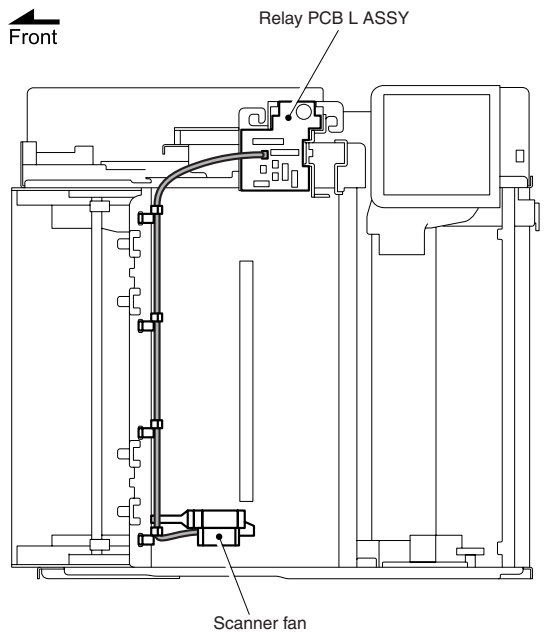

6 · Fan 40

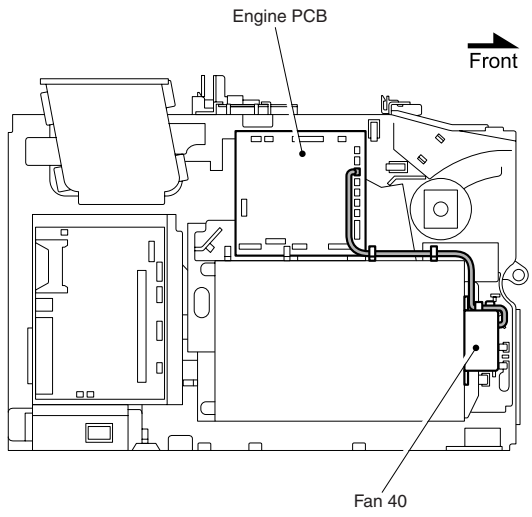

7 · Interlock SW ASSY

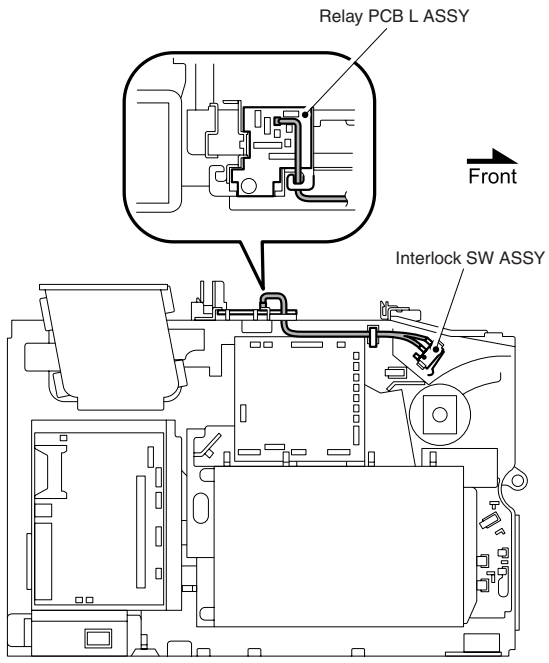

8 · Toner LED PCB ASSY

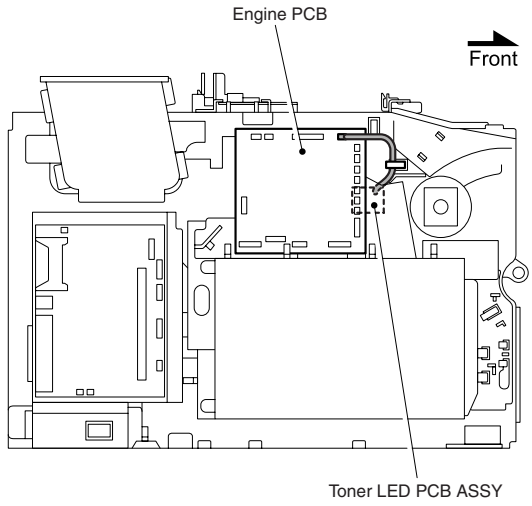

9 · Plate motor ASSY

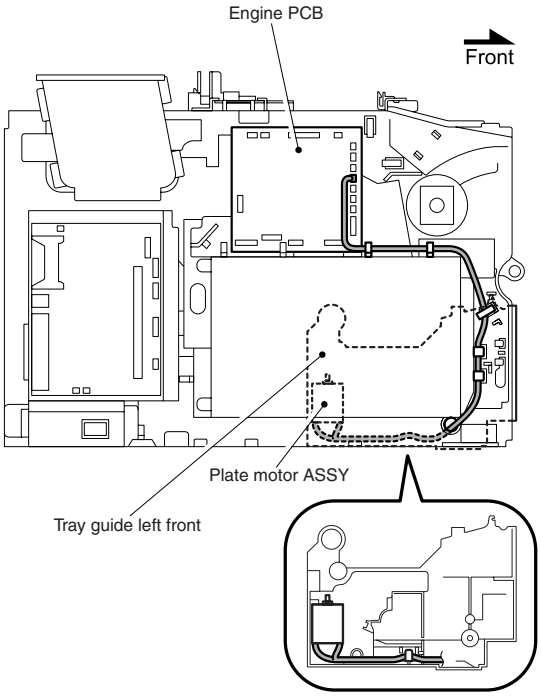

10 · PE/PO sensor PCB ASSY

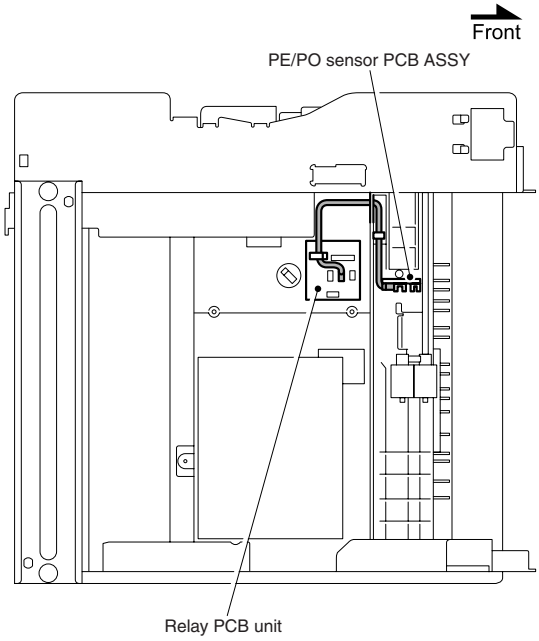

11 · DX sensor PCB

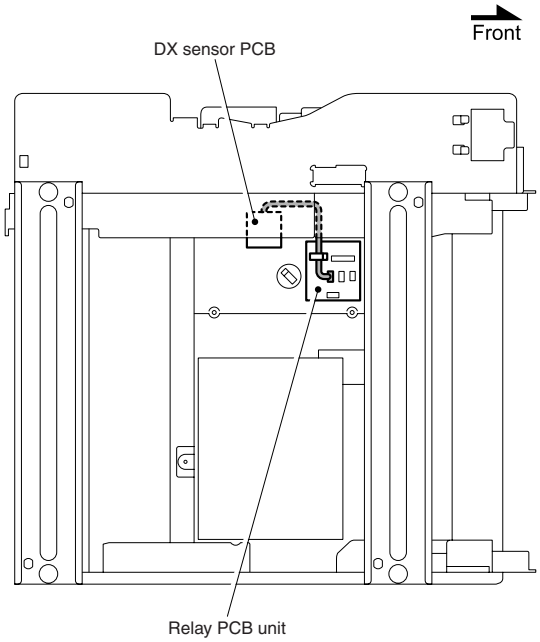

12 · LVPS PCB

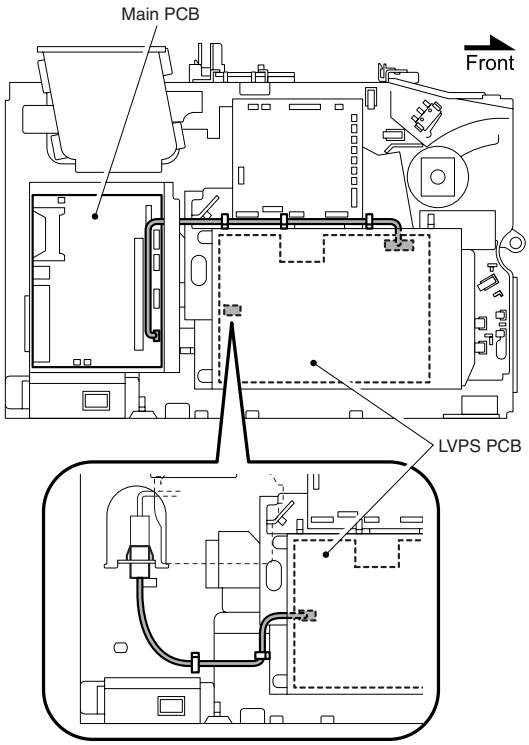

13 · T1 solenoid ASSY / MP solenoid ASSY

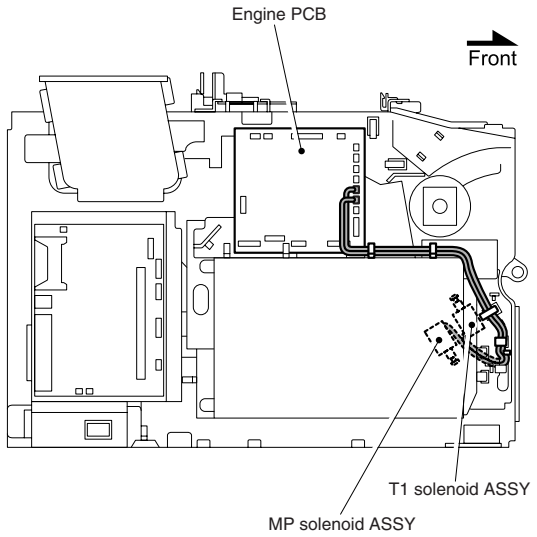

14 · Magnetic clutch regist

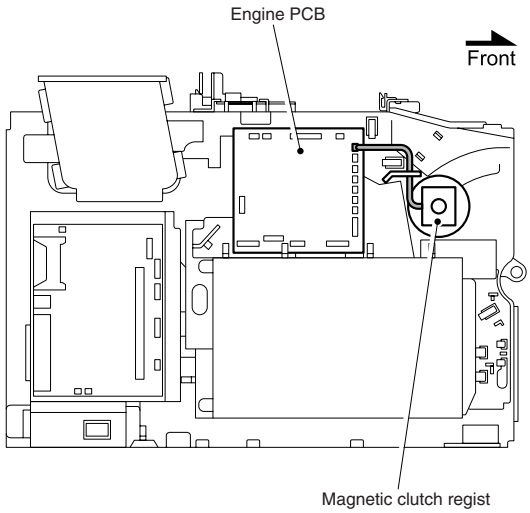

15 · Size SW PCB ASSY

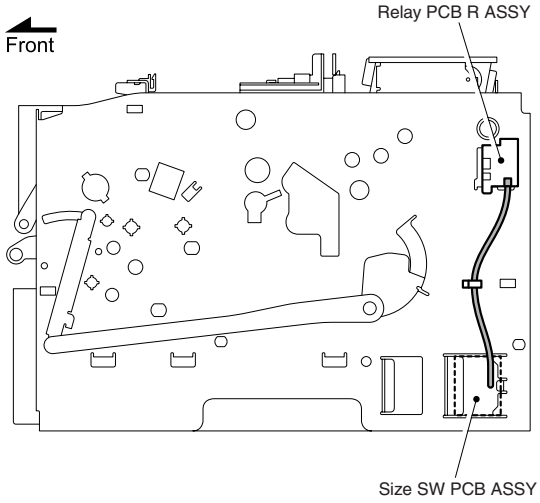

CHAPTER 5 PERIODIC MAINTENANCE

To avoid creating secondary problems by mishandling, follow the warnings below during maintenance work.

WARNING

(1) Always turn off the power switch and unplug the power cord from the power outlet before accessing any parts inside the printer.

(2) Some parts inside the printer are extremely hot immediately after the printer is used. When opening the front cover or rear cover to access any parts inside the printer, never touch the shaded parts shown in the following figures.

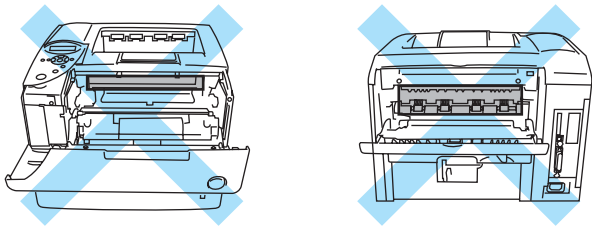

1. CONSUMABLE PARTS

The consumable parts described in this section are parts which are subject to deterioration or damage and should be replaced at least once during the period of warranty of the product if any print quality problem appears.

1.1 Drum Unit

The “CHANGE DRUM SOON” message appears on the LCD display when the drum unit is nearly at the end of its life.

Life expectancy: 30,000 pages
(When printing A4 or Letter-size paper (1page/ job))

NOTE:

There are many factors that determine the actual drum life, such as temperature, humidity, type of paper and toner that you use, etc.

<Replacement Procedure>

(1) Press the cover release button; and then open the front cover.

(2) Take out the drum unit assembly (drum unit with the toner cartridge).

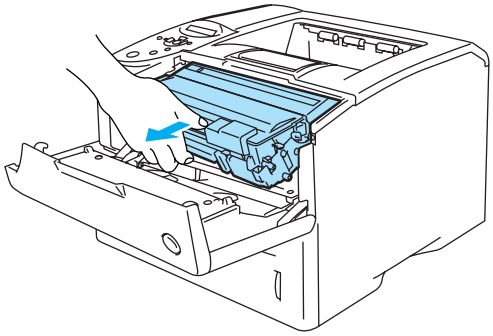

Fig. 5-1

CAUTION:

1) It is recommended to place the drum unit assembly on a piece of disposable paper or cloth in case you accidentally spill or scatter toner.
2) To prevent damage to the printer from static electricity, do not touch the electrodes shown in the figure below.

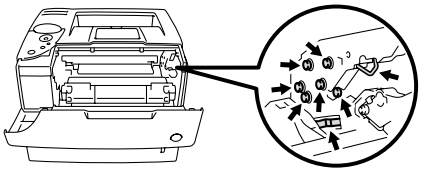

Fig.5-2

(3) Push down the blue lock lever and take the toner cartridge out of the drum unit assembly.

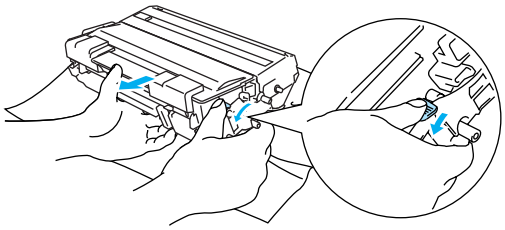

Fig. 5-3

(4) Unpack the new drum unit.

(5) Put the toner cartridge firmly into the new drum unit until you hear it lock into place. If you put the cartridge in properly, the blue lock lever will lift automatically.

(6) Check that the blue tab is on the home position. (Fig.5-5)

(7) Gently wipe the scanner window with a dry, soft cloth.

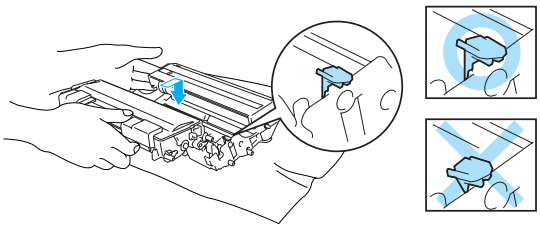

Fig. 5-4

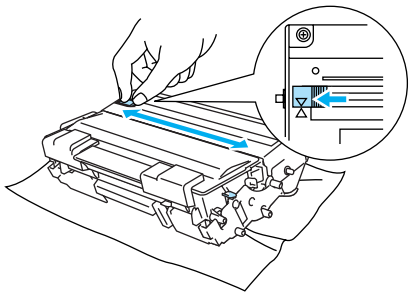

Fig.5-5

(8) Put the drum unit assembly in the printer. Make sure that the printer is turned on and the front cover is open.

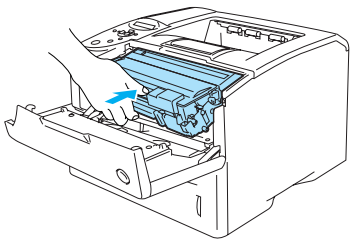

Fig.5-6

(9) Reset the drum counter.

(10) Close the front cover.

CAUTION:

- *For best performance, use only genuine Brother toner. The product should only be used in a clean, dust-free environment with adequate ventilation.*
- *Only unpack a drum unit immediately before you need to install it into the printer. If an unpacked drum unit is subjected to excessive direct sunlight or room light, the unit may be damaged.*
- *Handle the drum unit and toner cartridge carefully. If toner scatters on your hands or clothes, wipe or wash it off with cold water immediately.*
- *Discard the used drum unit according to local regulations. Be sure to seal up the drum unit tightly so that toner powder does not spill out of the unit.*
- *Do not reset the page counter when replacing the toner cartridge only.*
- *It is recommended to clean the printer when you replace the drum unit. Refer to subsection 3. 'PERIODICAL CLEANING' in this Chapter.*
- *Make sure you insert the toner cartridge properly, or it may separate from the drum unit when you pick up the drum unit assembly.*
- *Do not touch the shaded parts shown in the figure below to prevent any degradation to the print quality.*

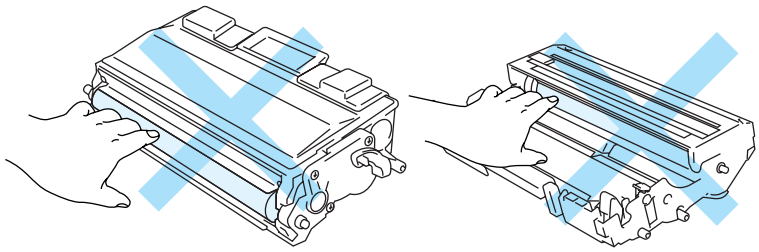

Fig.5-7

1.2 Toner Cartridge

Toner low:	The “TONER LOW” message appears at intervals on the LCD display when the toner cartridge has nearly run out of toner.
Toner life end:	The “TONER LIFE END” message appears on the LCD display when the printer has run out of toner or the toner is not evenly distributed inside the cartridge.
Life expectancy:	7,500 pages / toner cartridge (When printing A4 or Letter size paper at 5% print coverage)

NOTE:
There are many factors that determine the actual toner life, such as temperature, humidity, type of paper that you use, the number of pages per print job, etc.

<Replacement Procedure>

(1) Press the cover release button and then open the front cover of the printer.

(2) Take out the drum unit assembly (drum unit with toner cartridge).

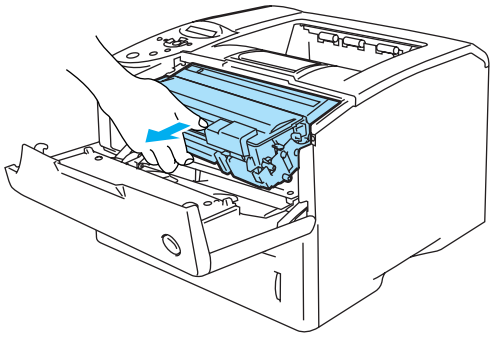

Fig. 5-8

CAUTION:
1) It is recommended to place the drum unit assembly on a piece of disposable paper or cloth in case you accidentally spill or scatter toner.
2) To prevent damage to the printer from static electricity, do not touch the electrodes shown in the figure below.

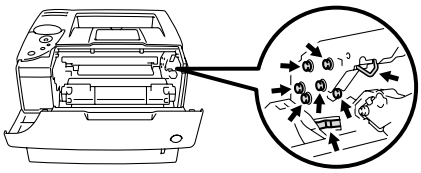

Fig.5-9

(3) Push down the blue lock lever and take the toner cartridge out of the drum unit assembly.

(4) Unpack the new toner cartridge. Hold the cartridge level with both hands and gently rock it from side to side five or six times to spread the toner evenly inside the cartridge.

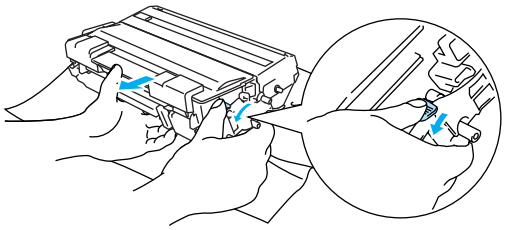

Fig. 5-10

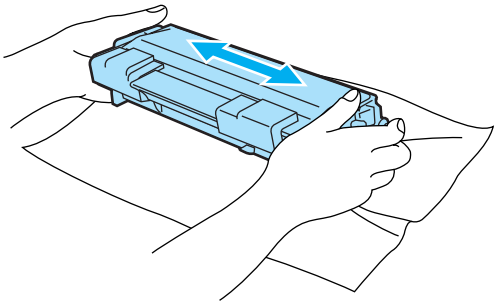

Fig.5-11

(5) Pull off the protective cover.

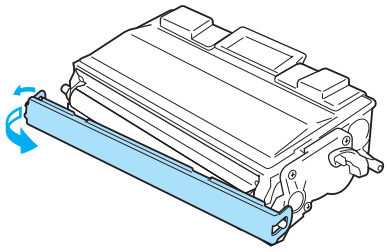

Fig. 5-12

(6) Put the new toner cartridge firmly into the drum unit until you hear it lock into place. If you put it in properly, the lock lever will lift automatically.

(7) Gently wipe the scanner window with a dry, soft cloth.

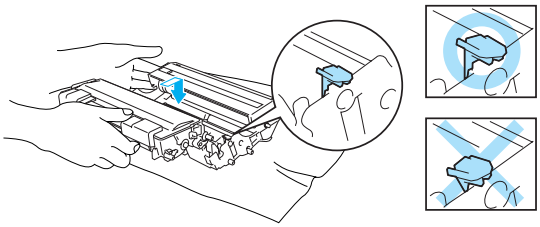

Fig. 5-13

(8) Clean the primary corona wire inside the drum unit by gently sliding the blue tab from right to left and left to right several times. Return the tab to the home position before you put the drum unit back in the printer. If you do not, printed pages may have a vertical stripe.

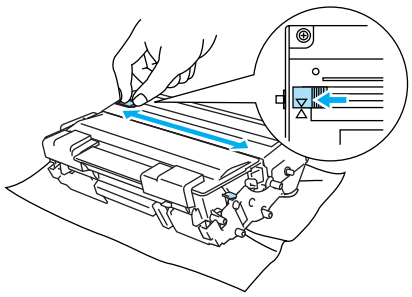

Fig. 5-14

(9) Put the drum unit assembly back in the printer. Close the front cover of the printer.

CAUTION:

- *Handle the drum unit and toner cartridge carefully. If toner scatters on your hands or clothes, wipe or wash it off with cold water immediately.*
- *Be sure to seal the toner cartridge tightly so that toner powder does not spill out of the cartridge.*
- *Discard the used toner cartridge in accordance with local plastic waste regulations.*
- *Only unpack a toner cartridge immediately before you need to install it into the printer. If a toner cartridge is left unpacked for a long period of time, the toner life is shortened.*
- *If an unpacked drum unit is subjected to excessive direct sunlight or room light, the unit may be damaged.*
- *Use a Brother genuine toner cartridge which is specially formulated to ensure top print quality.*
- *Printing with a 3rd party toner or toner cartridge may reduce not only the printing quality but also the quality and life of the printer itself. It may also cause serious damage to the performance and life of a genuine Brother drum unit. Warranty coverage does not apply to problems caused by the use of 3rd party toner or toner cartridges.*
- *Make sure that the wire cleaner on the drum unit is returned to the home position (◢ mark position) before re-installing the drum unit into the printer, or printed pages may have vertical stripes. (Refer to Fig. 5-13.)*
- *Install the toner cartridge immediately after you remove the protective cover. Do not touch the shaded part shown in the figure below;*

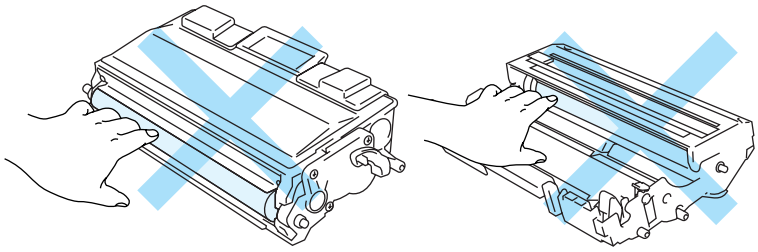

Fig. 5-15

NOTE:

It is recommended to clean the printer when you replace the toner cartridge. Refer to subsection 3. 'PERIODICAL CLEANING' in this Chapter.

2. PERIODICAL REPLACEMENT PARTS

Periodical replacement parts are the parts to be replaced periodically to maintain product quality. These parts would affect the product quality greatly if they lost their function even if they do not appear to be damaged or there is no change in their appearance.)

The periodical replacement parts listed below should be replaced at the service center referring to the service life. For the procedures to replace these parts, refer to subsection 2.1, 2.2, 2.3, 2.4 in CHAPTER 5.

Parts Name	LCD Message	Qty	Approximate Life *1 (number of prints)	Replacement Procedure
Fixing Unit (115V)	REPLACE FUSER	1	150,000 pages	See subsection 2.1 in CHAPTER 5.
Fixing Unit (230V)	REPLACE FUSER	1	150,000 pages	
Paper feeding kit for MP tray *2	REPLACE PF KITMP	1	100,000 pages	See subsection 2.3 in CHAPTER 5.
Paper feeding kit for Tray 1 *2	REPLACE PF KIT1	1	100,000 pages	See subsection 2.2 in CHAPTER 5.
Paper feeding kit for Tray 2 *2	REPLACE PF KIT2	1	100,000 pages	See subsection 2.2 in CHAPTER 5.
Laser Unit	REPLACE LASER	1	200,000 pages	See subsection 2.4 in CHAPTER 5.

NOTE:

**1*

At 5% print coverage (A4 or Letter size). The actual number of printed pages will vary depending on the print jobs and paper you use.

**2*

Paper feeding kit means the paper pick up roller and the separation pad.

NOTE:

- *Always turn off the power switch of the printer and unplug the power cord from the power outlet before replacing the periodical replacement parts.*
- *If the Fixing Unit is replaced after errors related to the Fixing Unit occur, it is necessary to leave the printer power ON for ten minutes after part replacement. This will make the printer to be released from errors.*
- *To reset the count of each periodical replacement parts by operating the LCD panel, refer to "4.2 Parts Life Reset function" on CHAPTER7.*
- *After disconnecting flat cables, check that each cable is not damaged at its end or short-circuited.*
- *When connecting flat cables, do not insert them at an angle. After insertion, check that the cables are not at an angle.*

2.1 Replacing the Fixing Unit

<Uninstalling Procedure>

1) Pull out the paper tray.

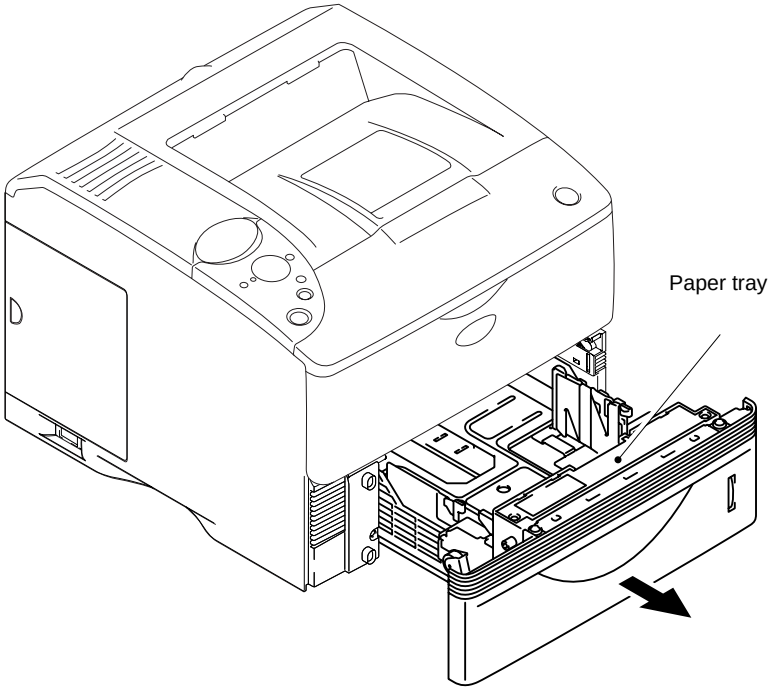

Fig.5-16

2) Remove the DX feed ASSY from the printer.

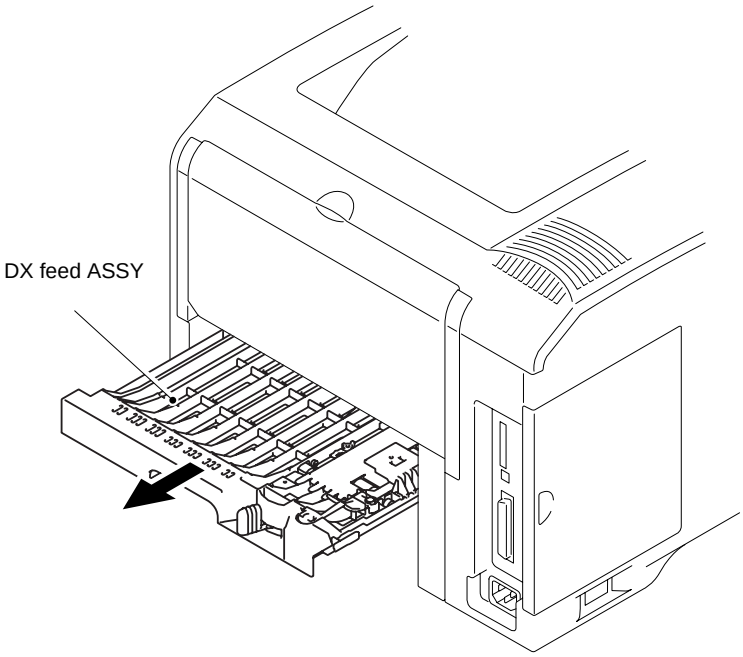

Fig.5-17

3) Open the rear tray.

4) Remove the two shoulder screws, and remove the rear cover ASSY.

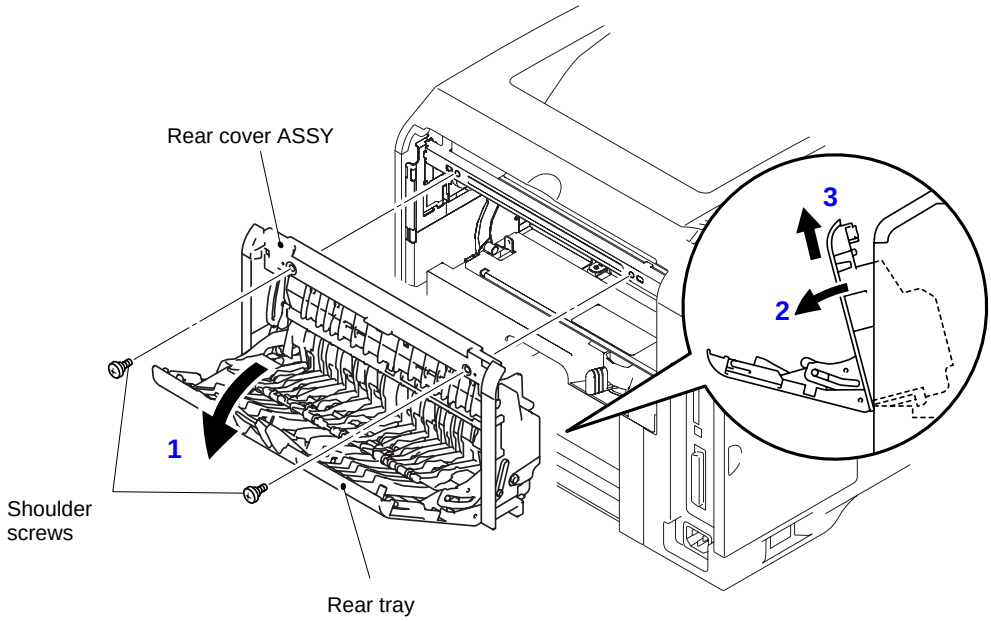

Fig.5-18

5) Disconnect the two connectors.

6) Remove the two cup S M3x6 Taptite screws, and remove the fixing unit.

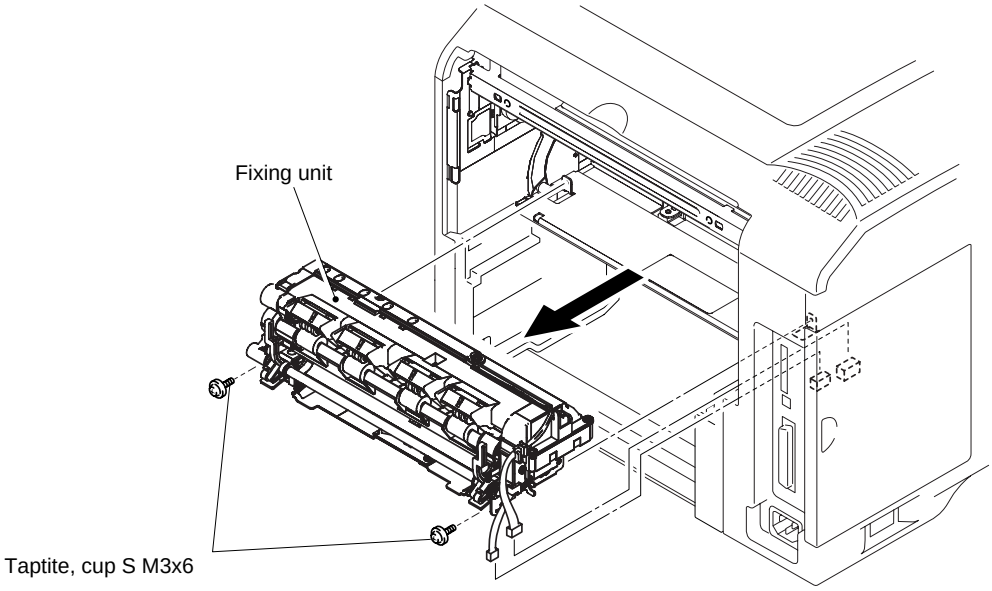

Fig.5-19

<Installing Procedure>

1) Install the fixing unit into the printer.
2) Secure the fixing unit with the two cup S M3x6 Taptite screws.
3) Connect the two connectors.

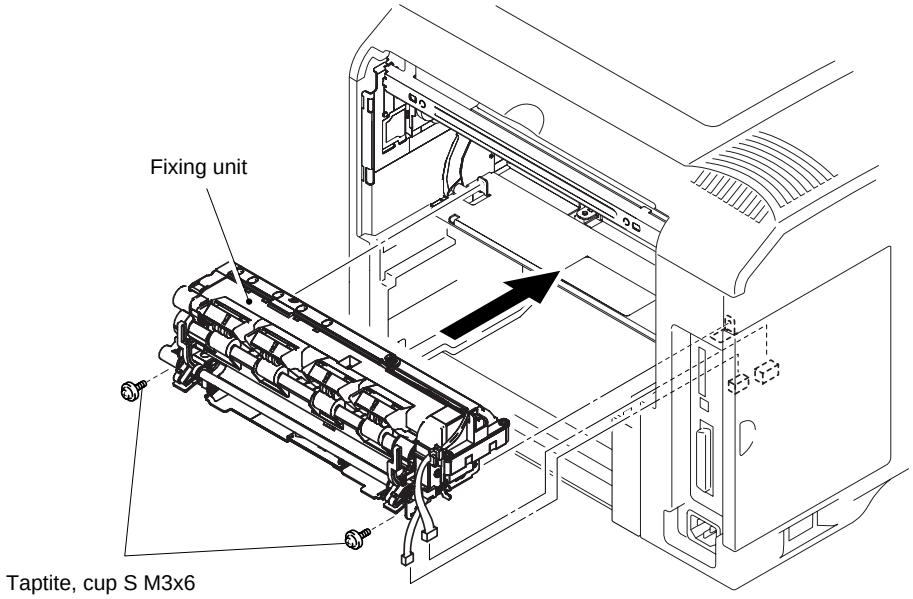

Fig.5-20

4) Set the rear tray.
5) Secure the rear cover ASSY with the two shoulder screws.
6) Close the rear tray.

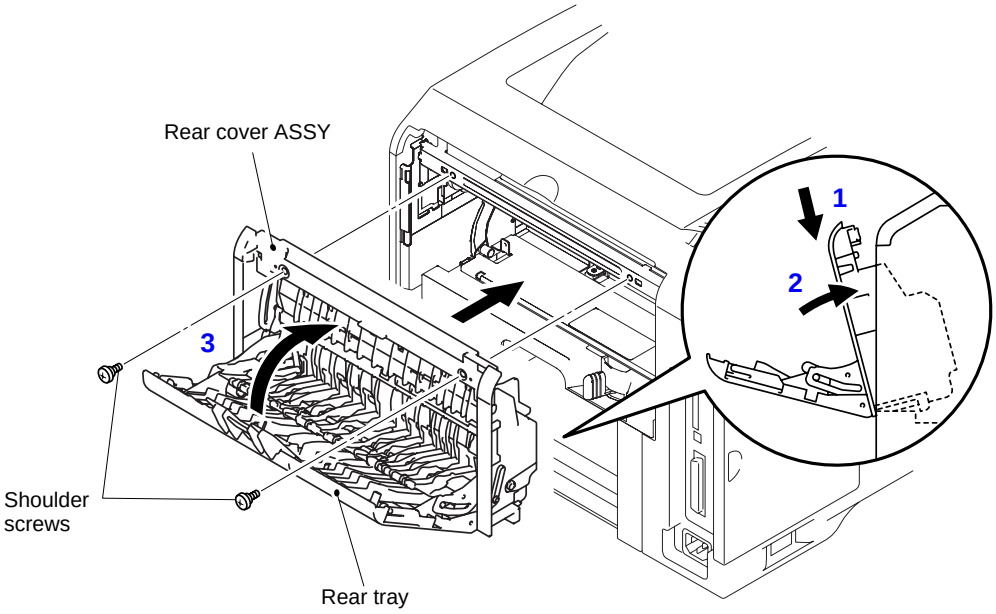

Fig.5-21

7) Install the DX feed ASSY into the printer.

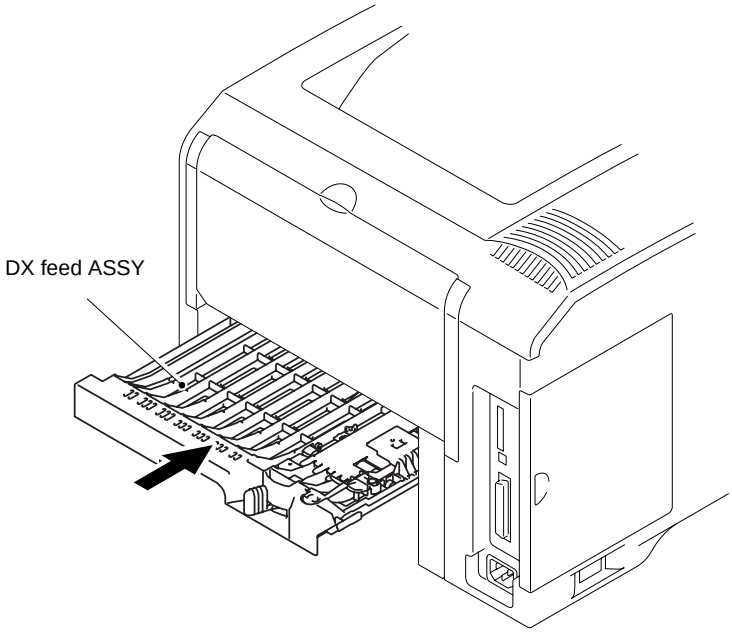

Fig.5-22

8) Put the paper tray into the printer.

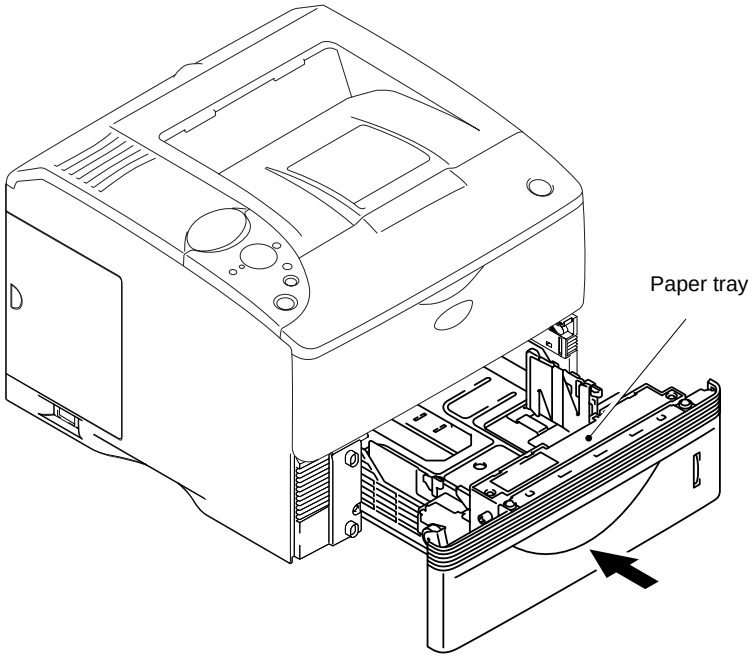

Fig.5-23

2.2 Replacing the Paper Feeding Kit Tray

<Uninstalling Procedure>

1) Pull out the paper tray.

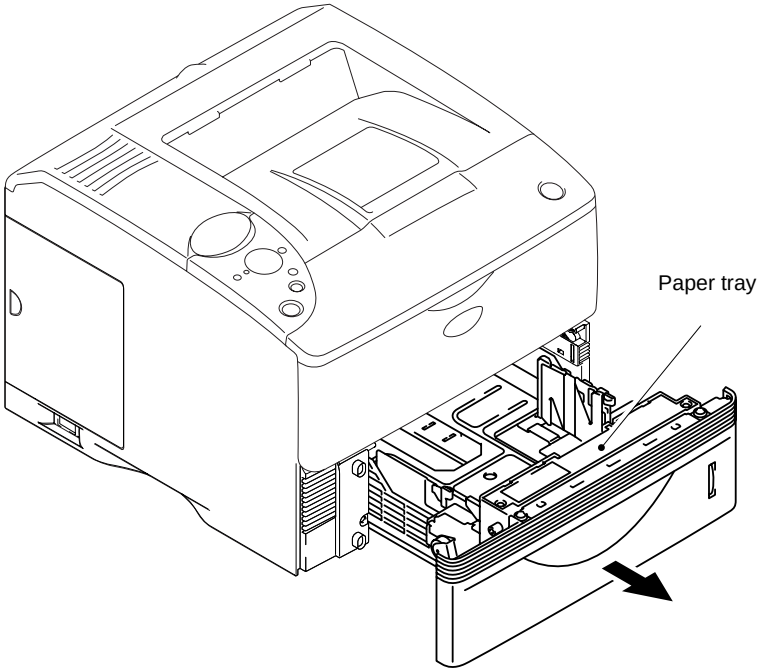

Fig.5-24

2) Remove the separation pad ASSY and the separation pad spring from the paper tray.

NOTE:

Be sure not to lose the separation pad spring when you remove the separation pad ASSY.

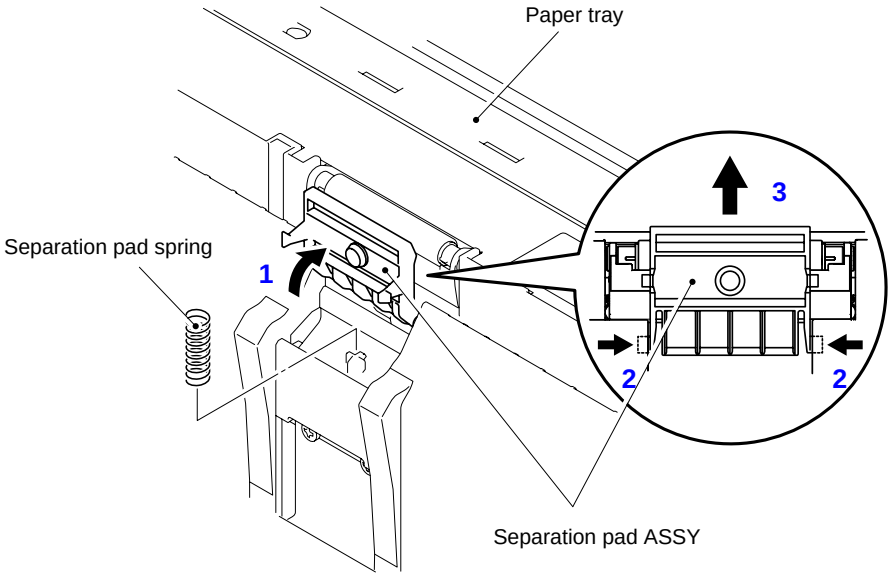

Fig.5-25

3) Turn over the machine.
4) Release the hook, and remove the separation roller ASSY.
5) Release the hook, and remove the feed roller ASSY.

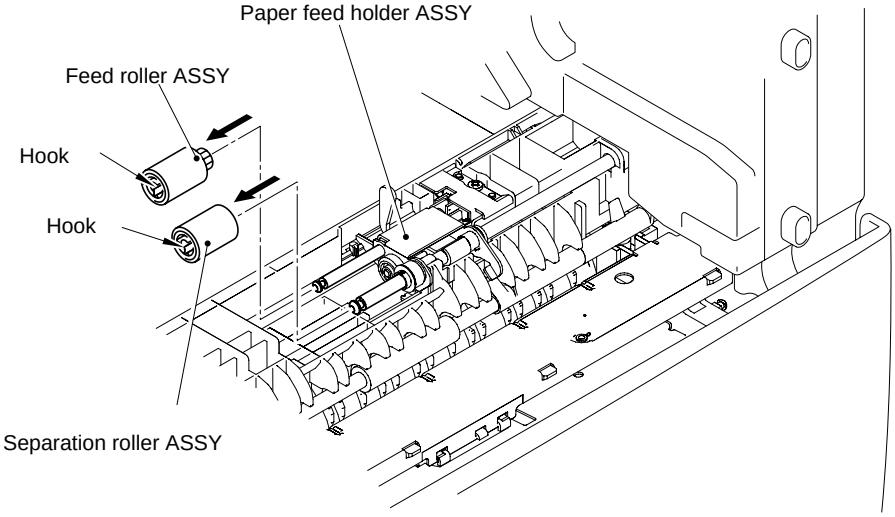

Fig.5-26

<Installing Procedure>

1) Set the feed roller ASSY onto the paper feed holder ASSY.
2) Set the separation roller ASSY onto the paper feed holder ASSY.
3) Place the printer on its base.

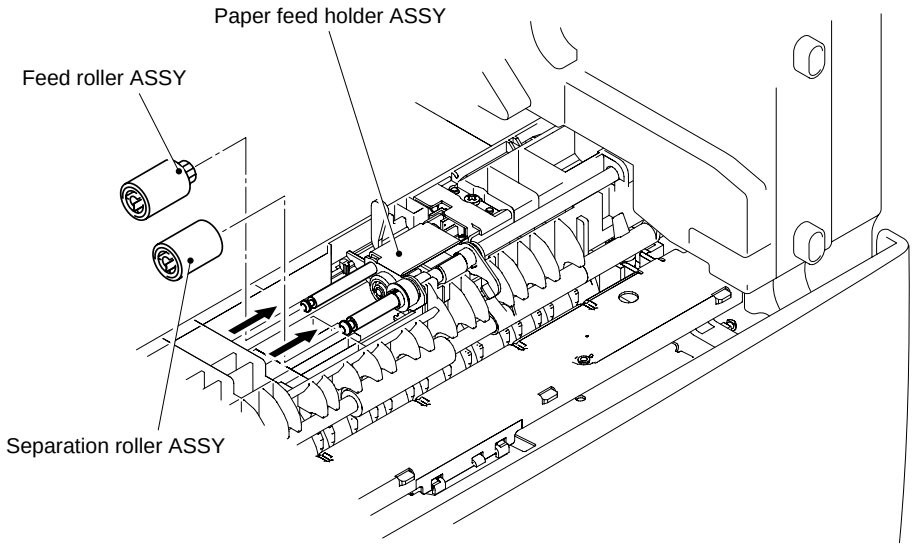

Fig.5-27

4) Fix the separation pad ASSY and separation pad spring onto the paper tray.

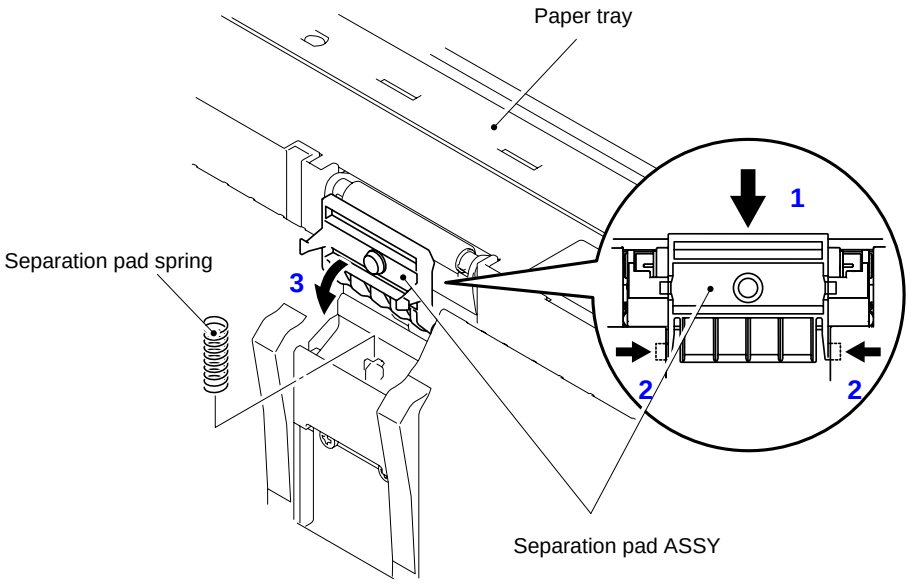

Fig.5-28

5) Put the paper tray into the printer.

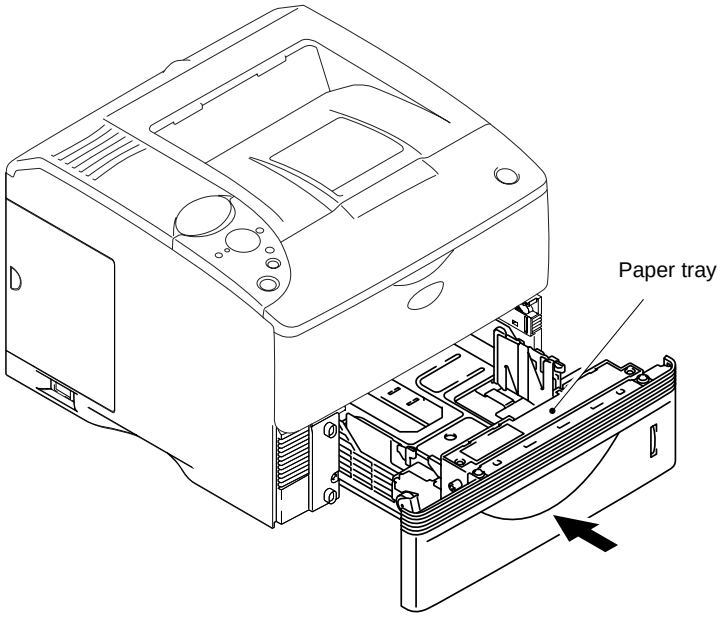

Fig.5-29

2.3 Replacing the Paper Feeding Kit MP

<Uninstalling Procedure>

1) Open the process unit cover ASSY and remove the drum unit.

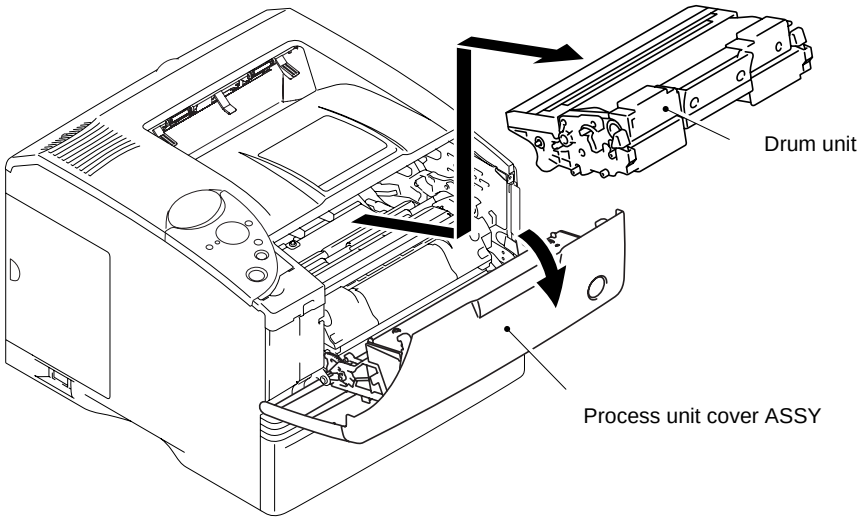

Fig.5-30

2) Open the MP roller cover.
3) Remove the bearing R.
4) Remove the paper pick-up roller ASSY and two roller collars.

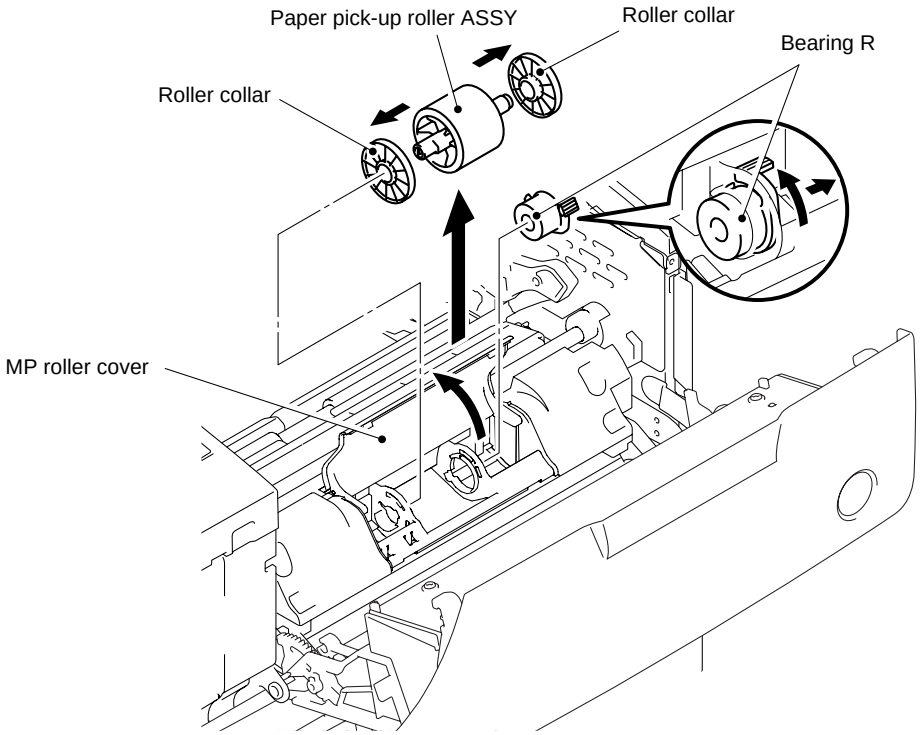

Fig.5-31

5) Remove the separation plate ASSY.

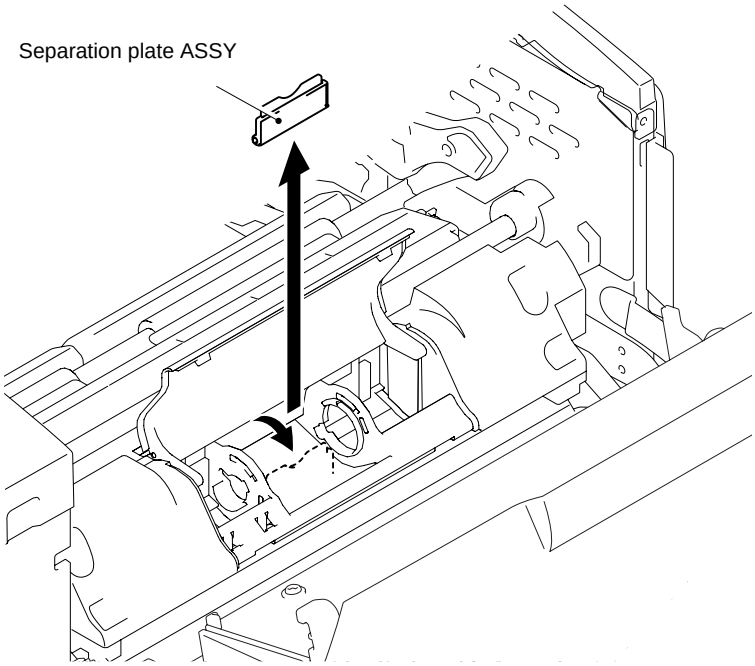

Fig.5-32

<Installing Procedure>

1) Set the separation plate ASSY.

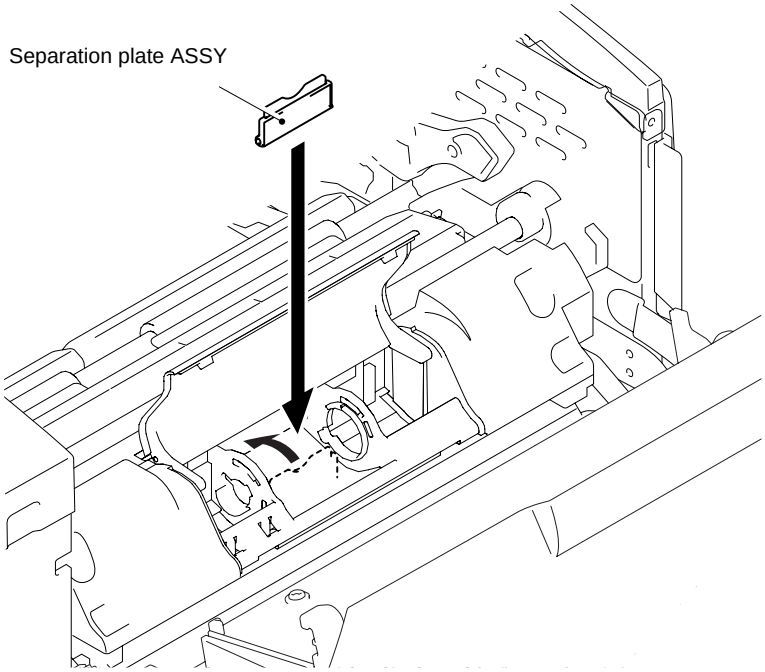

Fig.5-33

2) Set the paper pick-up roller ASSY and two roller collars.
3) Fix the bearing R.
4) Close the MP roller cover.

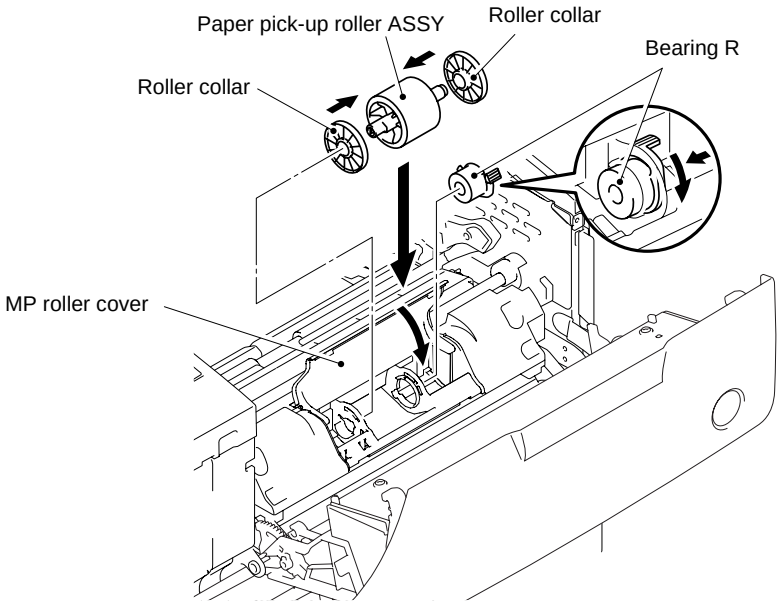

Fig.5-34

5) Install the drum unit into the printer and close the process unit cover ASSY.

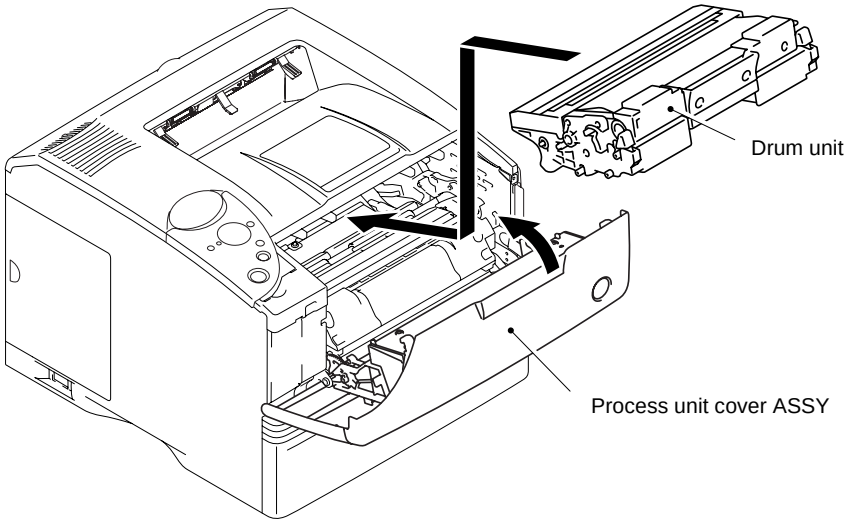

Fig.5-35

2.4 Replacing the Laser Unit

<Uninstalling Procedure>

1) Open the process unit cover ASSY and remove the drum unit.
2) Pull out the paper tray.

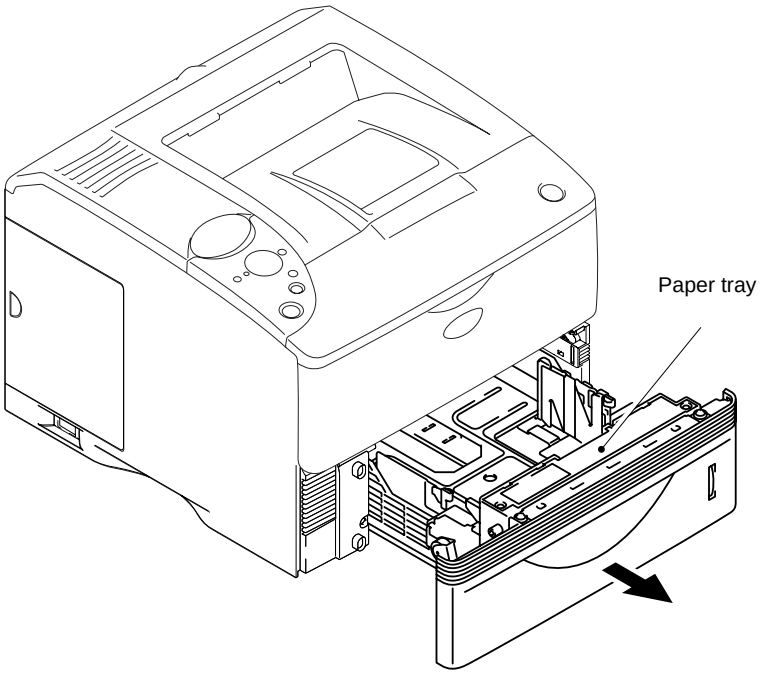

Fig.5-36

3) Remove the DX feed ASSY from the printer.

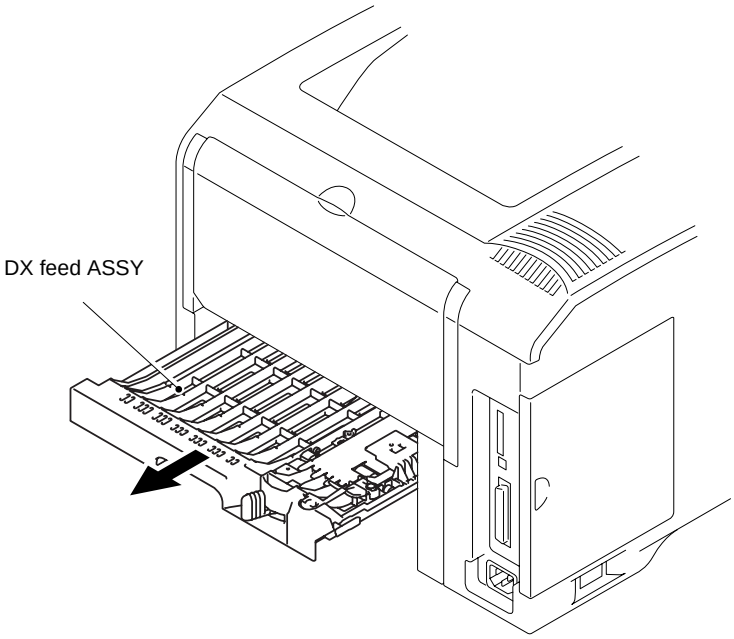

Fig.5-37

4) Open the rear tray.

5) Remove the two shoulder screws, and remove the rear cover ASSY.

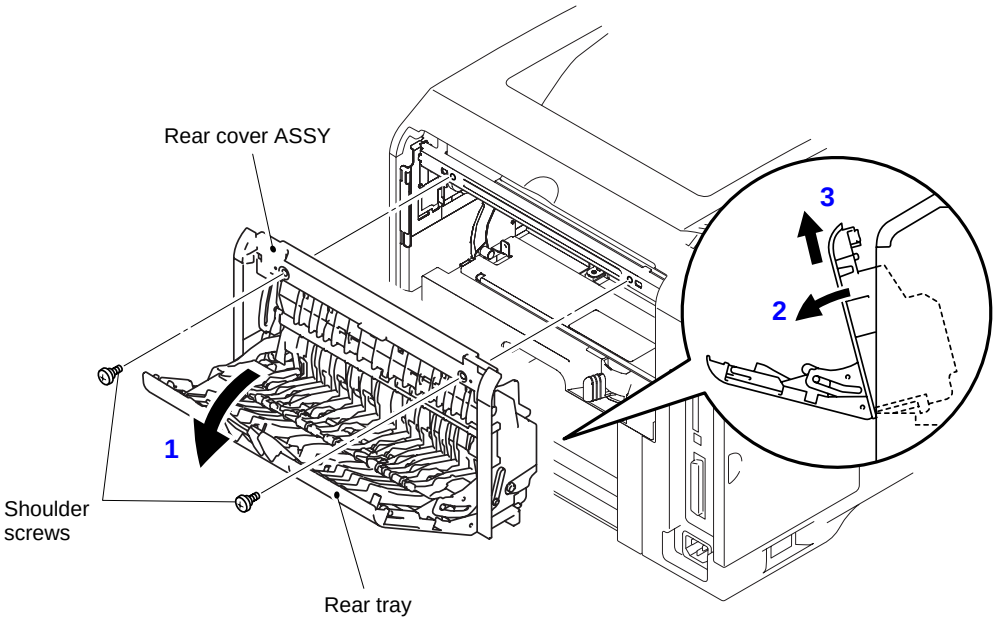

Fig.5-38

6) Open the process unit cover ASSY.

7) Remove the two shoulder screws at the front and another two at the rear.

8) Remove the top cover ASSY as removing the connector of the panel harness ASSY.

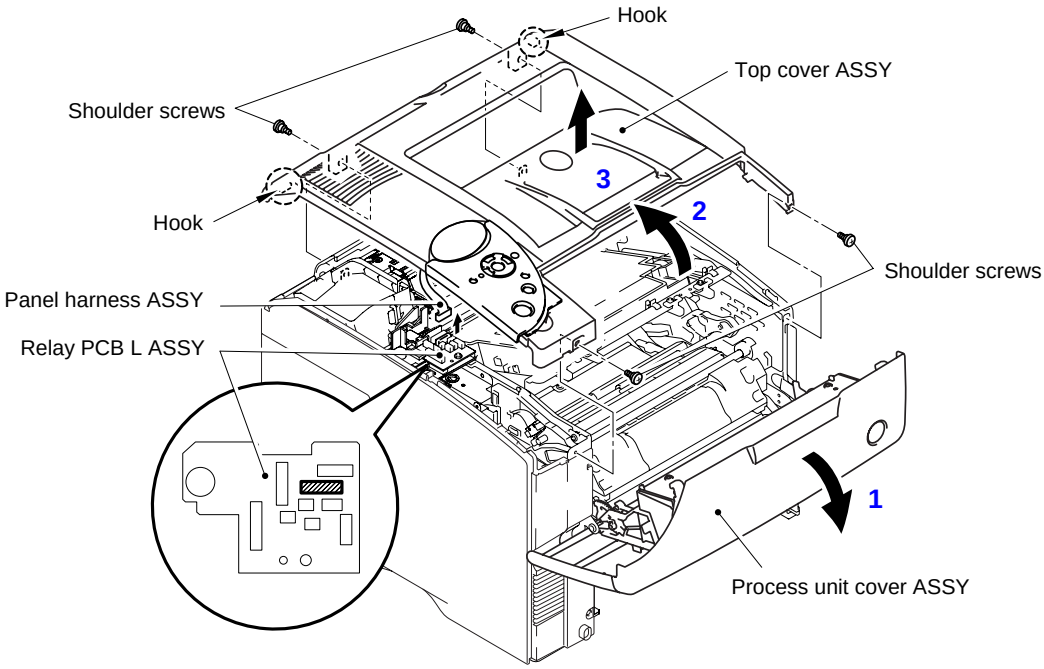

Fig.5-39

9) Disconnect the connector and flat cable.

NOTE:

- *After disconnecting the flat cable(s), check that each cable is not damaged at its end or short-circuited.*

10) Remove the four cup S M3x16 Taptite screws, and remove the laser unit.

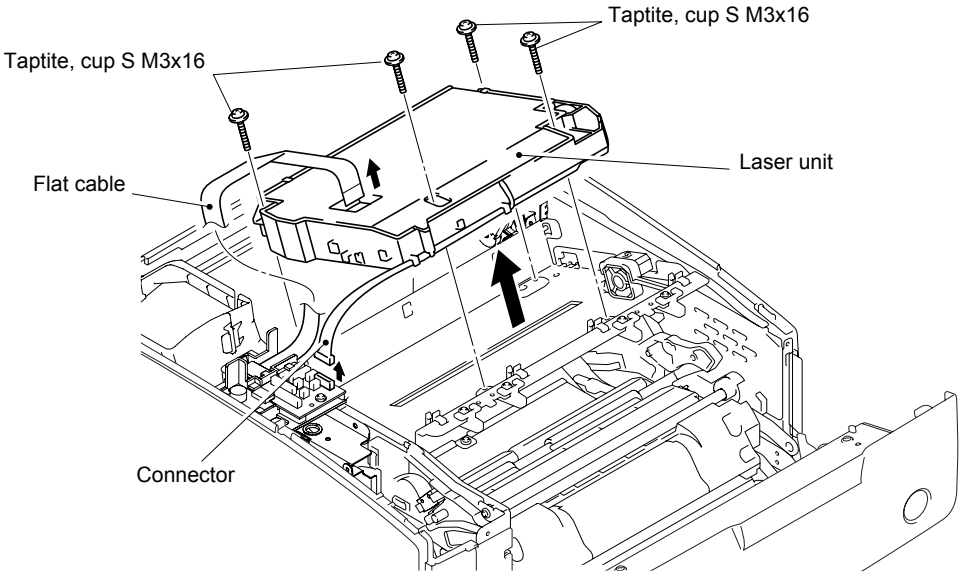

Fig.5-40

<Installing Procedure>

1) Secure the laser unit with the four cup S M3x16 Taptite screws.
2) Connect the connector and flat cable.
   NOTE:
   - *When connecting the flat cable(s), do not insert it at an angle. After insertion, check that the cable is not at an angle.*

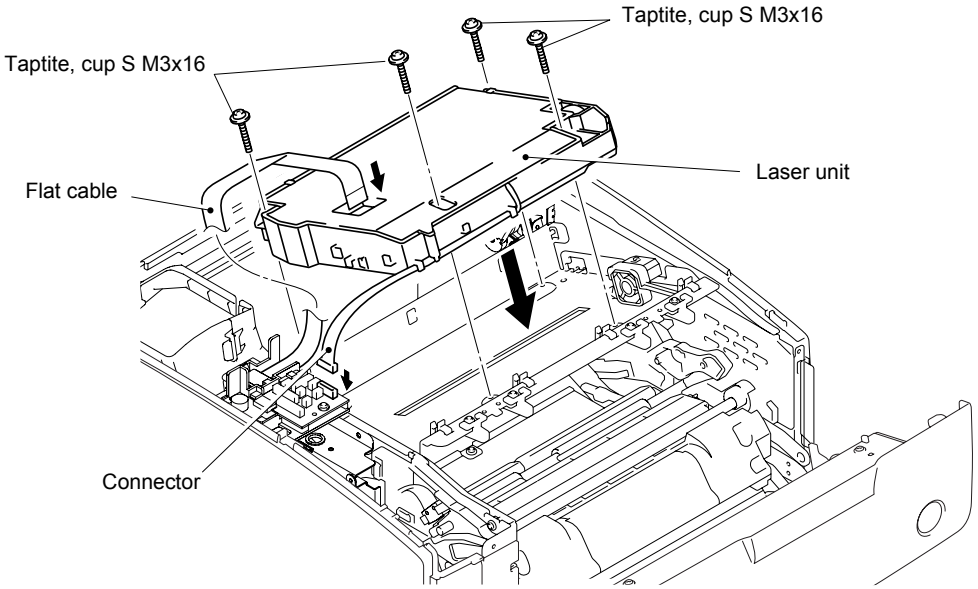

Fig.5-41

3) Connect the panel harness ASSY of the top cover ASSY into the relay PCB L ASSY.
4) Secure the top cover ASSY with the four shoulder screws.

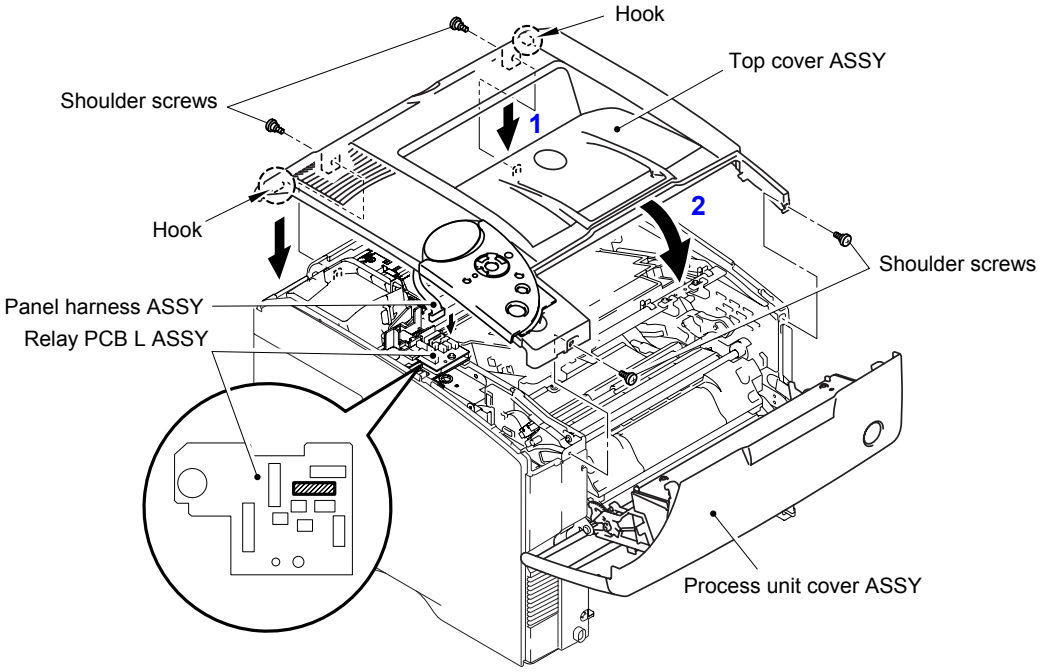

Fig.5-42

5) Secure the rear cover ASSY with the two shoulder screws.
6) Close the rear tray.

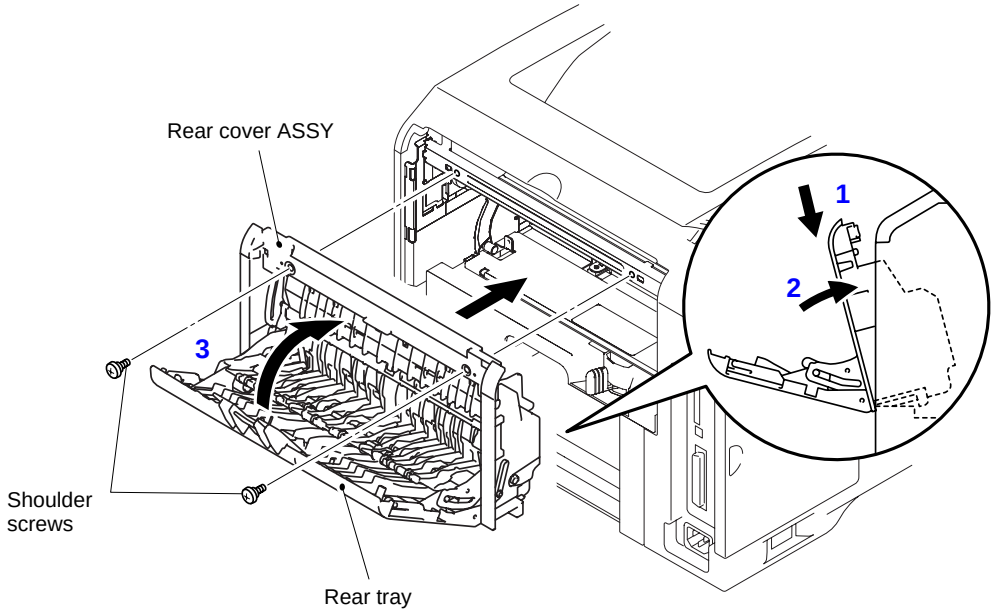

Fig.5-43

7) Install the DX feed ASSY into the printer.

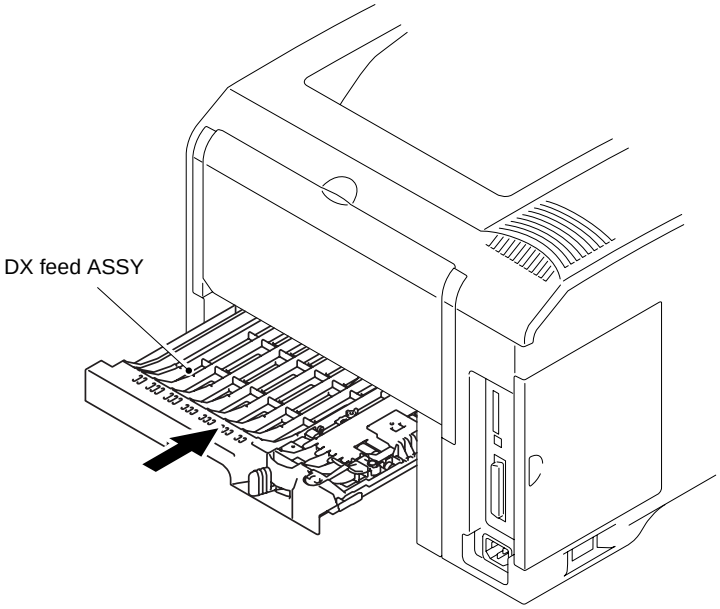

Fig.5-44

8) Install the drum unit into the printer and close the process unit cover ASSY.

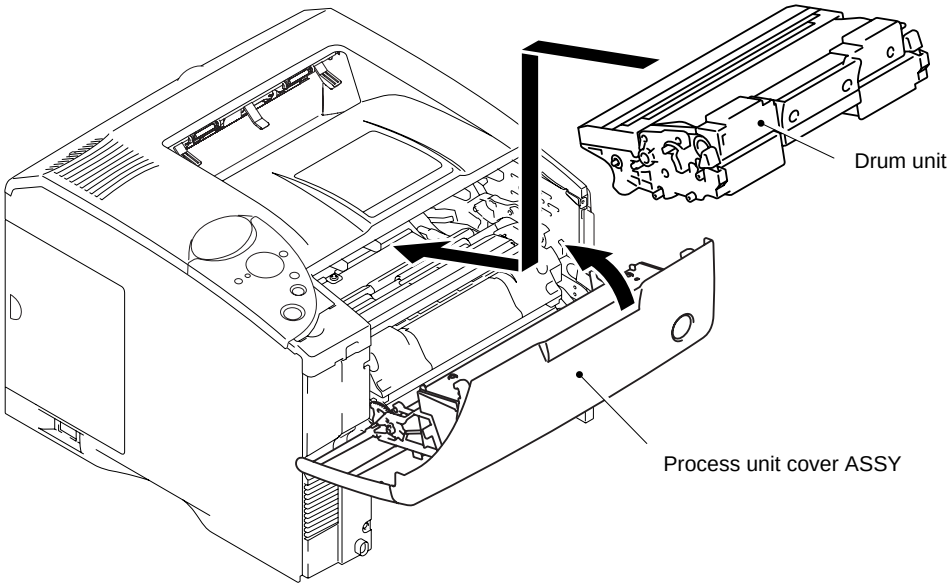

Fig.5-45

9) Put the paper tray into the printer.

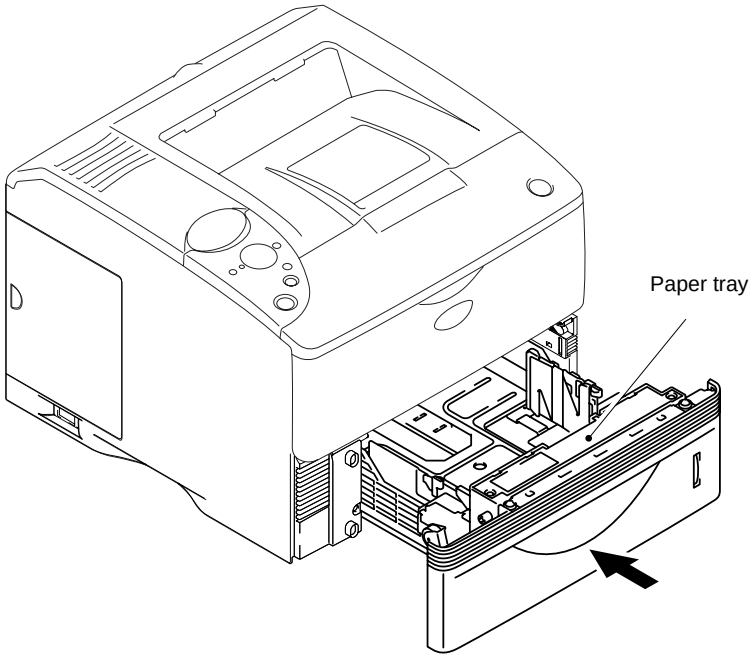

Fig.5-46

3. PERIODICAL CLEANING

Clean the following parts periodically to avoid any printer problems or print image defects.

> **CAUTION:**
> *While drum unit and scanner window cleaning basically can be implemented by the end user, the electrical terminals inside the printer and on the drum unit should be cleaned by a service technician. Instruct the users not to touch those terminals.*

> **WARNING**
> ***There are high voltage electrodes inside the printer. Before cleaning the printer, make sure that the power switch has been turned off and the power cord has been unplugged from the power outlet.***

3.1 Cleaning the Printer Exterior

Clean the printer exterior to keep the printer clean.

1) Turn off the printer power switch, and then unplug the printer power cord.
2) Take the paper tray out of the printer.
3) Open the multi-purpose tray.
4) Wipe the outside of the printer with a soft cloth to remove dust.

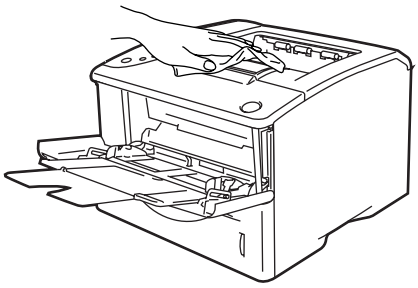

Fig.5-47

5) Remove anything that is stuck inside the paper tray.

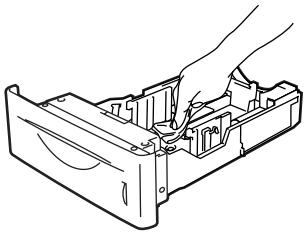

Fig.5-48

6) Put the paper tray back in the printer, and then close the multi-purpose tray.
7) Plug the printer power cord back in, and then turn the printer power switch back on.

CAUTION:

- *Use water or neutral detergents for cleaning. Cleaning with volatile liquids such as thinner or benzene will damage the surface of the printer.*
- *Do not use cleaning materials that contain ammonia. They will damage the printer and the toner cartridge.*

3.2 Cleaning the corona wire

When replacing the drum unit or toner cartridge with a new one, be sure to clean the drum unit.

1) Turn off the printer power switch, and then unplug the printer power cord.
2) Press the cover release button, and then open the front cover of the printer.
3) Take out the drum unit assembly (drum unit with the toner cartridge).

CAUTION:

1) It is recommended to place the drum unit assembly on a piece of disposable paper or cloth in case you accidentally spill or scatter toner.
2) To prevent damage to the printer from static electricity, do not touch the electrodes shown in the figure below.

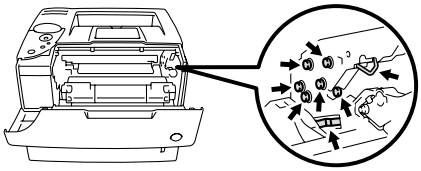

Fig.5-49

4) Clean the primary corona wire inside the drum unit by gently sliding the blue tab from right to left several times. Return the tab to the home position before re-install the drum unit assembly.

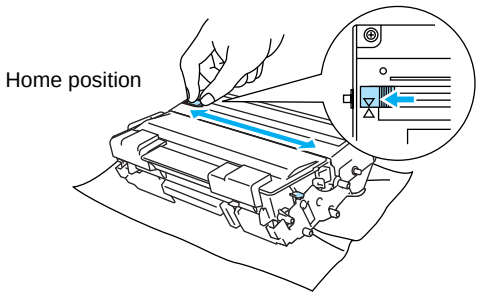

Fig. 5-50

CAUTION:

Make sure that the blue tab on the drum unit is returned to the home position before re-installing the drum unit into the printer, or printed pages may have a vertical stripe.

5) Put the drum unit assembly back in the printer.
6) Close the front cover.
7) Plug the printer power cord back in, and then turn the printer power switch back on.

3.3 Cleaning the Scanner Window

When replacing the drum unit or toner cartridge with a new one, be sure to clean the scanner window.

1) Turn off the printer power switch and unplug the printer power cord.
2) Press the cover release button, and then open the front cover of the printer.
3) Take out the drum unit assembly (drum unit with the toner cartridge).

> ***CAUTION:***
> *1) It is recommended to place the drum unit assembly on a piece of disposable paper or cloth in case you accidentally spill or scatter toner.*
> *2) Be careful not to inhale the toner.*
> *3) After you have just used the printer, some parts inside the printer are extremely hot. When you open the front cover of the printer, never touch the fuser and fixing roller.*

4) Gently wipe the scanner window with a soft dry cloth.

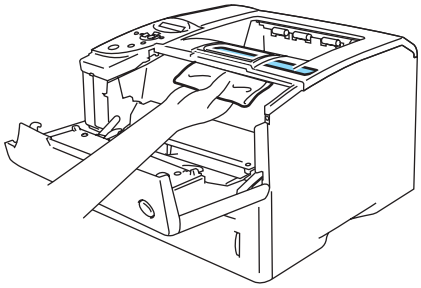

Fig.5-51

5) Put the drum unit assembly in the printer.
6) Close the front cover.
7) Plug the printer power cord back in, and then turn the printer power switch back on.

> ***CAUTION:***
> - *Handle the drum unit carefully since it contains toner. If toner scatters and your hands or cloths get dirty, immediately wipe or wash it off with cold water.*
> - *Do not touch the scanner window with your fingers.*
> - *Do not wipe the scanner window with isopropyl alcohol.*

3.4 Cleaning the Electrical Terminals

To obtain the best print performance, be sure to clean the electrical terminals inside the printer body.

1) Turn off the power switch and unplug the power cord.
2) Remove the drum unit from the printer.
3) Wipe the electrical terminals as shown in the figure below with a soft dry cloth.

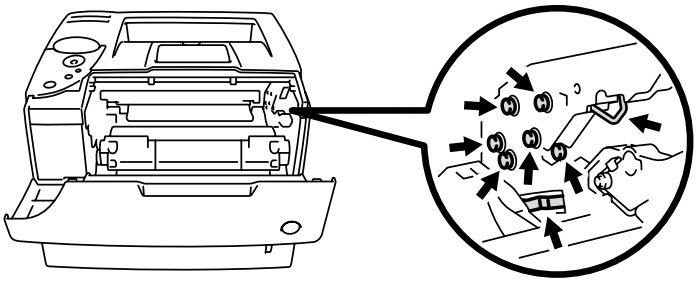

Fig. 5-52

4. SERVICE INFORMATION

Machine life: 600,000 pages/ 5 years

Monthly volume: 60,000 pages

MTBF (Meantime between failure): Up to 4,000 hours

MTTR (Meantime to repair): Average 30 minutes except the periodical maintenance parts (the Paper Feeding Kit) and the printer control boards whose MTTR is average 5 minutes.

CHAPTER 6 TROUBLESHOOTING

1. INTRODUCTION

1.1 Initial Check

(1) Operating environment

Check if:

- The source voltage stays within ±10% from the rated voltage shown on the rating plate.
- The printer is installed on a solid, level surface.
- The room temperature is maintained between 10°C and 32.5°C. The relative humidity is maintained between 20% and 80%.
- The printer is not located in a dusty place.
- The printer is not exposed to ammonia fumes or other harmful gases.
- The printer is not located in a hot or humid area (such as near water or a humidifier).
- The printer is not exposed to direct sunlight.
- The room is well-ventilated.
- The printer is not placed where the ventilation hole of the printer is blocked.

(2) Print paper

Check if :

- A recommended type of print paper is being used. [If the paper is too thick or too thin, or tends to curl, paper jams or paper feed problems may occur, or printed images may be blurred.]
- The print paper is damp. [If so, use fresh paper, and check whether the print quality improves or not.]
- The print paper is short-grained paper or acid paper. [If so, print quality problems may occur.]

For further information on paper, refer to subsection 3.5 ‘Paper’ in CHAPTER 1.

(3) Consumable parts

Check if:

- The “TONER LOW” message appears on the LCD display on the printer control panel when a toner cartridge is installed in the printer. [If the message appears, replace the cartridge with a new one.]

For further information on consumable parts, refer to 1. ‘CONSUMABLE PARTS’ in CHAPTER 5.

(4) Others

Condensation:

When the printer is moved from a cold room into a warm room in cold weather, condensation may occur inside the printer, causing various problems as listed below:

- Condensation on the optical surfaces such as the scanning mirror, lenses, the reflection mirror and the protection glass may cause the print image to be light.
- If the photosensitive drum is cold, the electrical resistance of the photosensitive layer is increased, making it impossible to obtain the correct contrast when printing.
- Condensation on the corona unit may cause corona charge leakage.
- Condensation on the hopper plate and separation pad may cause paper feed troubles.

If condensation has occurred, print several pages or leave the printer for 2 hours to allow it to reach room temperature.

If the drum unit is unpacked soon after it is moved from a cold room to a warm room, condensation may occur inside the unit, which may cause incorrect images. Instruct the user to allow the unit to come to room temperature before unpacking it. This will take one or two hours.

1.2 Warnings for Maintenance Work

To avoid creating secondary problems by mishandling, follow the warnings below during maintenance work.

WARNING

(1) Always turn off the power switch and unplug the power cord from the power outlet before accessing any parts inside the printer.

(2) Some parts inside the printer are extremely hot immediately after the printer is used. When opening the front cover or rear cover to access any parts inside the printer, never touch the shaded parts shown in the following figures.

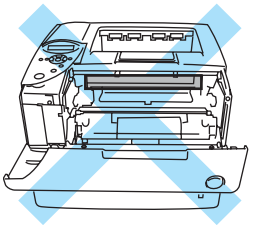

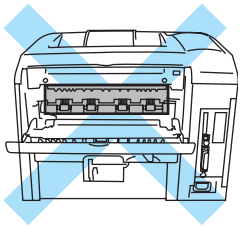

1.3 Identify the Problem

If you encounter any printer error or problem, first identify it referring to the chart below, then see the appropriate section.

NOTE:

The following troubleshooting sections contain both the actions which users should take or check and the ones which service technicians should perform.

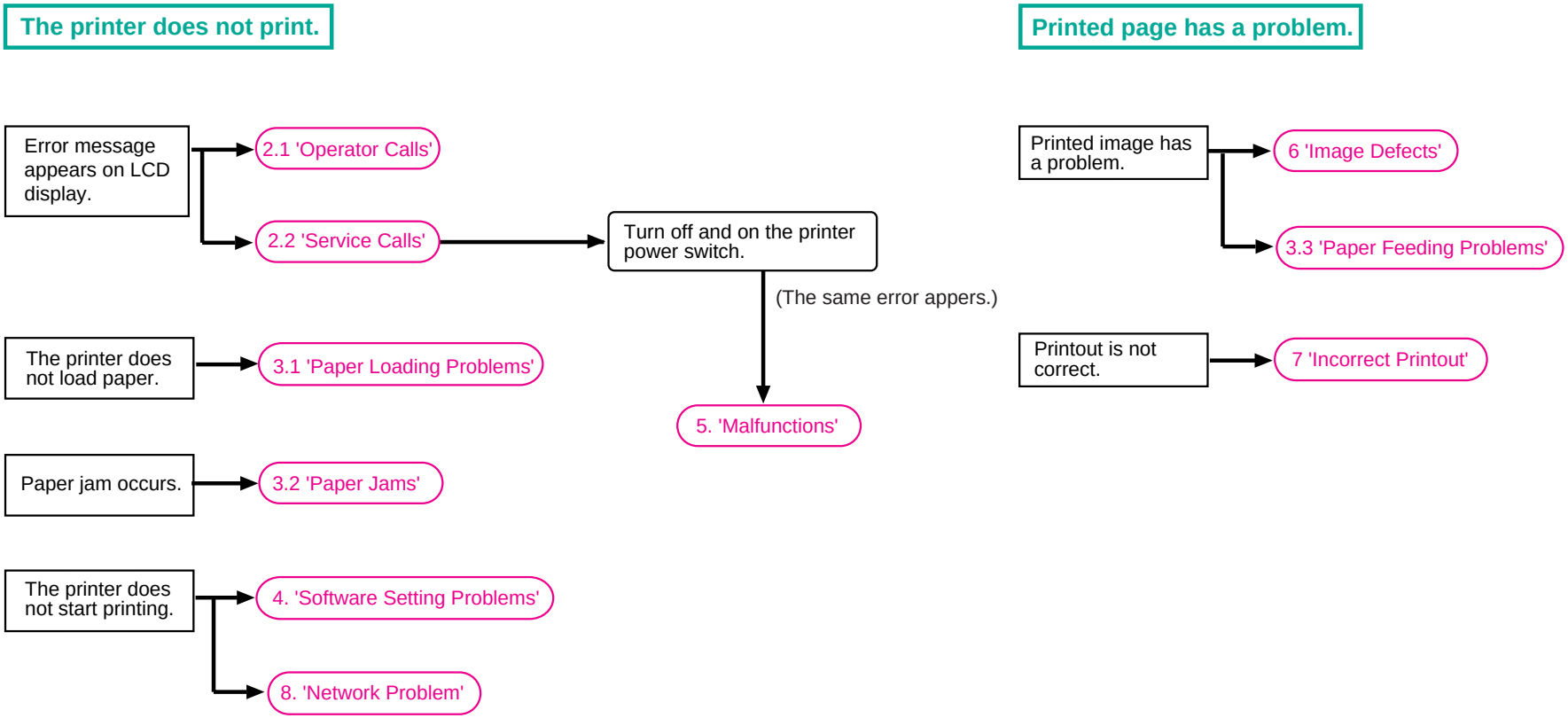

2. OPERATOR CALLS & SERVICE CALLS

2.1 Operator Calls

An 'operator call' which the printer indicates on the LCD display is user recoverable. Identify the error from the table below and take the corrective action described for each indication to correct it. The printer automatically recovers from most errors, but it may also be necessary to reset the printer with the control panel button.

Error Message	Remedy
BACK TRAY CLOSED	Open the back output tray. Push down the two blue levers, and then press **Go**.
BACK TRAY OPEN	Close the back output tray located at the back of the printer.
BUFFER ERROR	Check the interface settings.
CARD ERROR	Make sure of the following: The CompactFlash card is installed properly. The installed CompactFlash card is formatted properly. Turn off the printer. Wait a few seconds, then turn it on again. If this error message appears again, replace the CompactFlash card with a new one.
CARTRIDGE ERROR	Take out the toner cartridge and put it back into the printer again. Refer to subsection 1.2 Toner Cartridge in CHAPTER 5.
CLEAN DRUM UNIT	Open the front cover. Take out the drum unit assembly. Gently slide the blue tab of the drum unit across several times.
DIMM ERROR	Re-install the DIMM correctly. Turn off the printer. Wait a few seconds, and then turn it on again. If this error message appears again, replace the DIMM with a new one.
DOWNLOAD FULL	Add more memory.
DX LEVER ERROR	Move the lever at the back of the printer to the correct paper size position; A4, Letter or Legal.
ERROR FUSER	Turn the power switch off, wait a few seconds and then turn it on again. Leave the printer for 15 minutes with the power on.
FONT FULL	Add more memory.
FRONT COVER OPEN	Close the front cover of the printer.
FUSER COVER OPEN	Close the jam clear cover located behind the back output tray at the back of the printer.

Error Message	Remedy
JAM XXX	Carefully pull out the jammed paper from the indicated area. Refer to subsection 3.2 Paper jams in this chapter.
MANUAL FEED	Put the same size of paper in the multi-purpose tray as is shown on the LCD. If the printer is 'paused', press **Go**.
MEDIATYPE ERROR	Specify the correct type of media.
MEMORY FULL	Add more memory.
NO DX TRAY	Put the duplex tray on the printer properly.
NO PAPER XXX	Put paper in the empty tray.
NO TRAY XXX	Put the paper tray in the printer.
PRINT OVERRUN	Reduce the resolution or add the optional memory. Set **Page Protection** to the correct size.
SIZE ERROR DX	You can only use A4, Letter and Legal size for duplex printing. Check the printer driver setting and put the correct sized paper in the paper tray or multi-purpose tray that is selected in the printer driver.
SIZE ERROR T1/T2	Put the same size paper in the paper tray or multi-purpose tray that is selected in the printer driver.
SIZE MISMATCH	Put the same size paper in the paper tray or multi-purpose tray that is selected in the printer driver, and then press **Go**.
STORAGE FULL	Delete unnecessary macros of fonts, or replace the CompactFlash card with a new one.
TRAY 1 ERROR	Take out the tray 1 from the printer and push it back in firmly.
TRAY 2 ERROR	Take out the tray 2 from the printer and push it back in firmly.
TONER LIFE END	Replace the toner cartridge with a new one. Refer to subsection 1.2 Toner Cartridge in CHAPTER 5.

Maintenance Message	Remedy
CHANGE DRUM SOON	The drum unit is almost at the end of life. Prepare a new drum unit. Refer to subsection 1.1 'Drum Unit' in CHAPTER 5.
TONER LOW	Indicates that the toner cartridge is nearly empty. Purchase a new toner cartridge in order to be ready for when the "TONER LIFE END" message is indicated. Refer to subsection 1.2 'Toner Cartridge' in CHAPTER 5.
REPLACE PF KITMP	Replace the paper feeding kit. (Separation pad spring/ Separation pad assy/ Separation roller assy/ Feed roller assy) Refer to 2 PERIODICAL REPLACEMENT PARTS in CHAPTER 5.
REPLACE PF KIT1	
REPLACE PF KIT2	
REPLACE FUSER	Replace the fixing unit. Refer to subsection 3.15 'Fixing Unit" in CHAPTER 4.
REPLACE LASER	Replace the laser unit. Refer to subsection 3.14 'Laser Unit' in CHAPTER 4.
CHECK NET BOARD	The installed network board is not compatible. Install the recommended network board.
CHECK NET VER.	The firmware version of the installed network board is not up to date. Update the firmware by accessing the Brother Solutions Center at http://solutions.brother.com.

2.2 Service Calls

When each of the following messages appears alternately on the LCD, a user unrecoverable error may have occurred.

Instruct the user to turn off the power switch, wait 5 seconds and then turn it on again. If the error is not cleared and the same service call appears, identify the error from the table on the next page and take the corrective action described for each indication to correct it.

```
ERROR ###   *
↕
SERVICE CALL
```

* ### indicates the error codes.

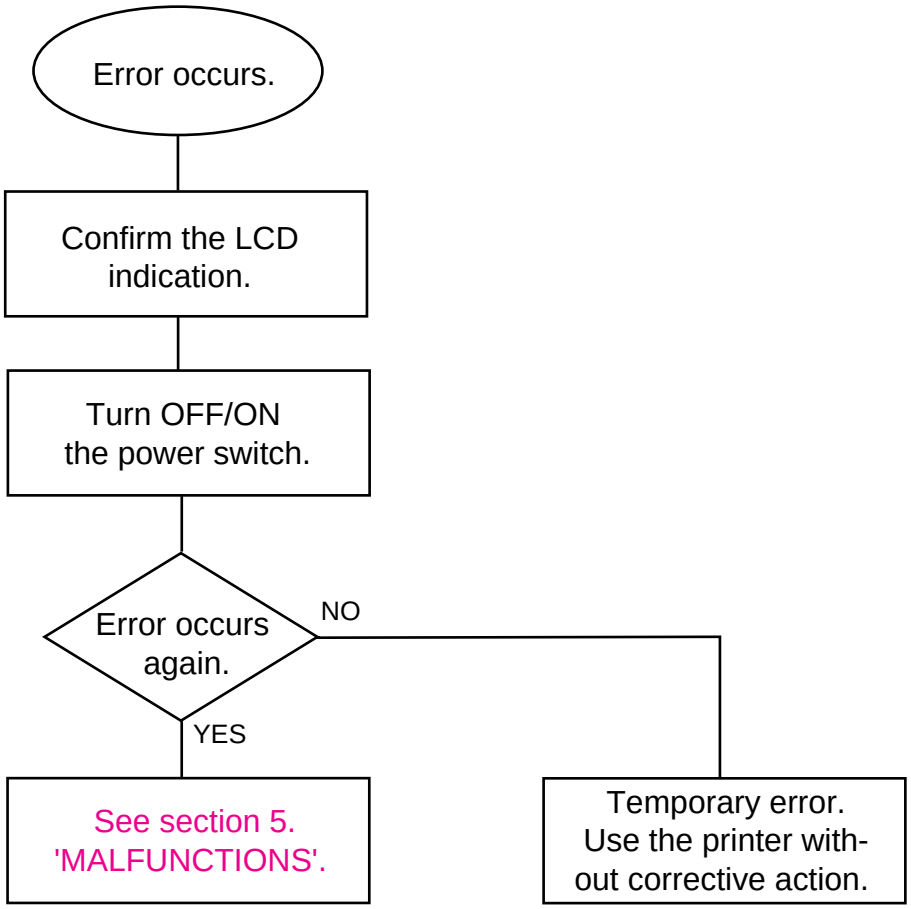

Error Messages	Meaning	Remedy
ERROR S01	Fatal error	Turn off the printer. Wait a few seconds, then turn it on again. If still remains, replace the main PCB.
ERROR S02	Instruction access error	Turn off the printer. Wait a few seconds, then turn it on again. If still remains, replace the main PCB.
ERROR S03	Memory address not aligned	Turn off the printer. Wait a few seconds, then turn it on again. If still remains, replace the main PCB.
ERROR S04	Instruction bus error	Turn off the printer. Wait a few seconds, then turn it on again. If still remains, replace the main PCB.
ERROR S05	Data bus error	Turn off the printer. Wait a few seconds, then turn it on again. If still remains, replace the main PCB.
ERROR S06	Privileged instruction	Turn off the printer. Wait a few seconds, then turn it on again. If still remains, replace the main PCB.
ERROR S07	Breakpoint error	Turn off the printer. Wait a few seconds, then turn it on again. If still remains, replace the main PCB.
ERROR S08	Illegal instruction	Turn off the printer. Wait a few seconds, then turn it on again. If still remains, replace the main PCB.
ERROR S09	No fpu	Turn off the printer. Wait a few seconds, then turn it on again. If still remains, replace the main PCB.
ERROR S10	Arithmetic overflow	Turn off the printer. Wait a few seconds, then turn it on again. If still remains, replace the main PCB.
ERROR S11	Undefined Interrupt	Turn off the printer. Wait a few seconds, then turn it on again. If still remains, replace the main PCB.
ERROR S12	Software 1 Interrupt	Turn off the printer. Wait a few seconds, then turn it on again. If still remains, replace the main PCB.
ERROR S13	Software 2 Interrupt	Turn off the printer. Wait a few seconds, then turn it on again. If still remains, replace the main PCB.
ERROR E41	Error in communication with the engine controller	Turn off the printer. Wait a few seconds, then turn it on again. Refer to M-11 'E41 error' in this chapter.

Error Messages	Meaning	Remedy
ERROR E49	Malfunction of fuser detected by hardware.	Turn off the printer. Wait a few seconds, and then turn it on again. Refer to M-8 'Fuser failure' in this chapter.
ERROR E50	Malfunction of fuser detected	Turn off the printer. Wait a few seconds, and then turn it on again. Refer to M-8 'Fuser failure' in this chapter.
ERROR E51	Malfunction of laser beam detector	Turn off the printer. Wait a few seconds, and then turn it on again. Refer to M-7 'Scanner failure' in this chapter.
ERROR E52	Malfunction of laser unit motor	Turn off the printer. Wait a few seconds, and then turn it on again. Refer to M-7 'Scanner failure' in this chapter.
ERROR E54	Malfunction of main motor	Turn off the printer. Wait a few seconds, and then turn it on again. Refer to M-3 'No paper supplied' in this chapter.
ERROR E55	Malfunction of high-voltage power supply	Turn off the printer. Wait a few seconds, and then turn it on again. Refer to M-4 'Insufficient output from high-voltage power supply unit' in this chapter.
ERROR E60	Malfunction of Fan motor 80 ASSY	Turn off the printer. Wait a few seconds, and then turn it on again. Replace the Fan Motor.
ERROR E80	Laser unit is not installed.	Install the laser unit.
ERROR E81	Fixing unit is not installed.	Install the fixing unit.
ERROR H39	BR-NET typing error	Turn off the printer. Wait a few seconds, and then turn it on again.
ERROR H60	Bus error	Turn off the printer. Wait a few seconds, and then turn it on again.
ERROR H61	Program ROM checksum error	Turn off the printer. Wait a few seconds, and then turn it on again.
ERROR H63	D-RAM error	Turn off the printer. Wait a few seconds, and then turn it on again. Refer to M-10 'ROM error / D-RAM error / NV-RAM error' in this chapter.
ERROR H66	NV-RAM writing error	Turn off the printer. Wait a few seconds, and then turn it on again. Refer to M-10 'ROM error / D-RAM error / NV-RAM error' in this chapter.

Error Messages	Meaning	Remedy
ERROR H67	NV-RAM reading error	Turn off the printer. Wait a few seconds, and then turn it on again. Refer to M-10 'ROM error / D-RAM error / NV-RAM error' in this chapter.
ERROR H68	NV-RAM bus error	Turn off the printer. Wait a few seconds, and then turn it on again. Refer to M-10 'ROM error / D-RAM error / NV-RAM error' in this chapter.
ERROR H73	Flash reading error	Turn off the printer. Wait a few seconds, and then turn it on again.
ERROR H74	Flash writing error	Turn off the printer. Wait a few seconds, and then turn it on again.

3. PAPER PROBLEMS

When any paper related problem occurs, ensure that the paper used meets the recommended paper specifications referring to subsection 3.5 'Paper' in CHAPTER 1.

3.1 Paper Loading Problems

Problem	Remedy
The printer does not load paper.	(1) If paper is in the paper tray, make sure it is straight. If the paper is curled, you should straighten it before printing. Sometimes it is helpful to remove the paper, turn the stack over, and then put it back in the paper tray. (2) Reduce the amount of paper in the paper tray, and then try again. (3) Make sure that manual feed mode is not set in the printer driver. (4) If there is paper dust on the separation roller, wipe it off with a moistened soft cloth. (5) The pickup roller or separation pad needs to be replaced.
The printer does not load paper from the multi-purpose tray.	(1) Fan the paper well and put it back in firmly. (2) Make sure you have chosen the manual feed mode in the printer driver.
The printer does not load envelopes.	The printer can load envelopes from the multi-purpose tray. You must set up your application software to print on the size of envelopes you are using. This is usually done in the page setup or document setup menu of the software. Refer to the software application manual.
Envelope is creased after it is printed.	Open the back output tray, and push down the blue tabs that are at the left-hand and right-hand sides of the back of the printer.
There is a paper jam.	(1) Clear the jammed paper. Refer to 3.2 Paper jams in this chapter. (2) If there is paper dust on the separation roller, wipe it off with a moistened soft cloth. (3) The pickup roller or separation pad needs to be replaced.
The printer feeds multiple pages.	The pickup roller or separation pad needs to be replaced.
The printer does not print to the face-down output tray.	Close the back output tray.
The printed pages are curled, so the face-down output tray can not hold the maximum number of sheets.	(1) Turn over the paper in the paper tray. (2) Change the printer driver setting in Media Type to a thicker seting.

The printer does not print.	(1) Make sure that the cable is connected to the printer. (2) Make sure that the appropriate printer driver is selected.
When printing on normal paper, it creases.	Change the printer driver setting in Media to the Thin setting.
When printing on Legal size paper or longer sized paper, the paper slides off the top output tray.	Pull up the output tray support flap.

3.2 Paper Jams

- If paper jams in the printer, it will stop printing and display the following messages on the LCD display.

JAM TRAY1	Paper jam in the upper tray (TRAY 1)
JAM TRAY2	Paper jam in the lower tray (TRAY 2)
JAM MP TRAY	Paper jam in the multi-purpose tray
JAM INSIDE	Paper jam inside the printer
JAM REAR	Paper jam where the paper comes out of the printer Paper jam in the back output tray
JAM DUPLEX	Paper jam in the duplex unit

- Check the jam location and follow the instructions to remove the jammed paper. Refer to subsection 3.2.1 'Clearing jammed paper' in this Chapter.
- After you have removed all the jammed paper, open the front cover and then close it again to start printing.
-

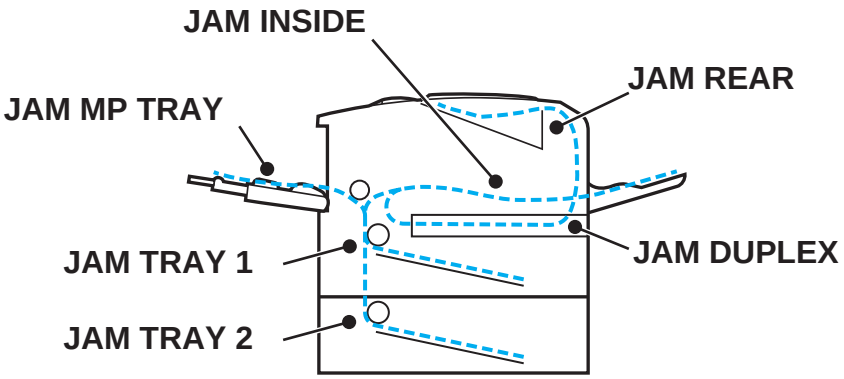

Fig. 6-1

3.2.1 Clearing jammed paper

Clear the jammed paper following the procedures below;

JAM TRAY 1 (Upper paper tray)

JAM TRAY 2 (Optional lower tray)

(1) Pull the paper tray completely out of the printer.

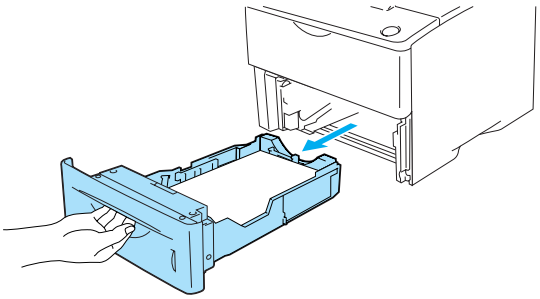

Fig. 6-2

(2) Open the process cover of the printer.

(3) Use both hands to slowly pull out the jammed paper.

NOTE:

If you cannot pull out a small piece of jammed paper, you can remove it by turning the dial as shown in Fig.6-4.

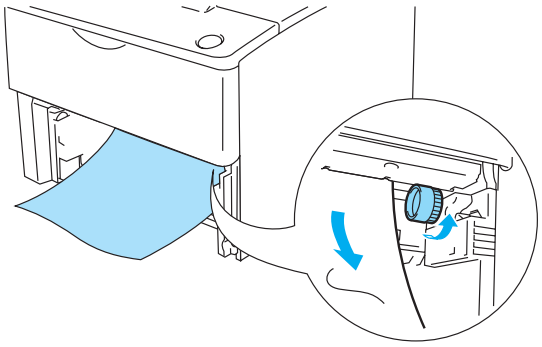

Fig.6-4

(3) Put paper below the maximum paper mark. While pressing the blue paper-guide release lever, slide the paper guides to fit the paper size. Check that the guides are firmly in the slots.

(4) Put the paper tray firmly back in the printer.

(5) Open the front cover of the printer, and then close it to resume printing.

> **CAUTION:**
> *Do not take out the paper tray while paper is feeding from a lower paper tray because this will cause a paper jam.*

JAM MP TRAY

(1) Press the cover release button and then open the front cover of the printer.

(2) Take out the drum unit assembly (drum unit with the toner cartridge).

(3) Remove the jammed paper from the multi-purpose tray.

(2) Fan the paper stack, then put it back in the multi-purpose tray.

(3) When loading paper in the multi-purpose tray, make sure it touches the back of the tray and stays below the maximum paper mark.

(4) Open the front cover of the printer and close it, or press **Go** to start printing.

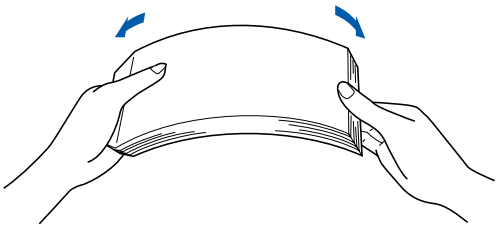

Fig. 6-5

JAM INSIDE **(paper jam inside the printer)**

(1) Press the cover release button and then open the front cover of the printer.

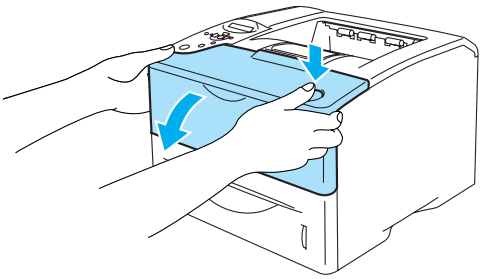

Fig. 6-6

(2) Take out the drum unit assembly (drum unit with the toner cartridge).

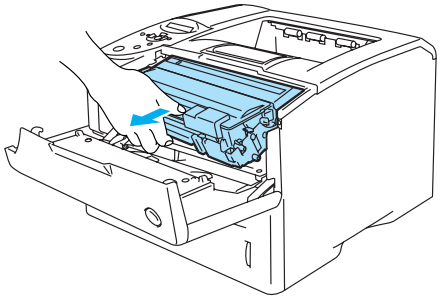

Fig.6-7

(3) Use both hands to slowly pull out the jammed paper.

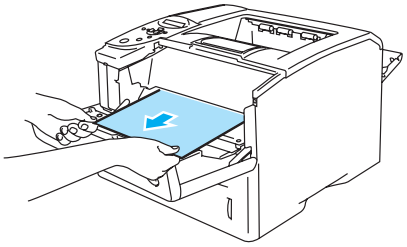

Fig.6-8

(4) Push down the blue lock lever of the drum unit assembly and take the toner cartridge out of the drum unit assembly. Remove a piece of jammed paper if there is any inside the drum unit.

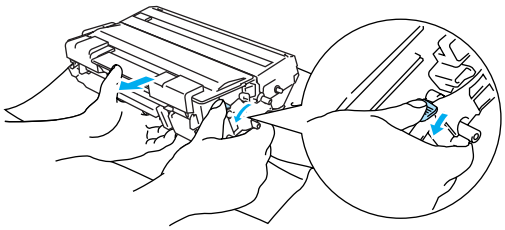

Fig.6-9

(5) Put the drum unit assembly back in the printer (press firmly).

(6) Close the front cover of the printer.

WARNING

After you have just used the printer, some parts inside the printer are extremely hot. When you open the front cover of the printer, never touch the fuser or the fixing roller.

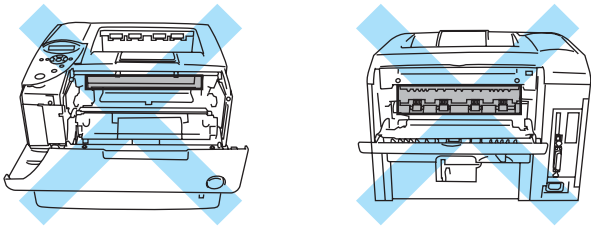

CAUTION:

- *After you have removed the jammed paper, print a few test pages. This is to make sure that the printed pages have no toner stains on them before you restart the print job.*
- *Remove the jammed paper carefully so you do not spread toner.*
- *Take care not to stain your hands and clothes with toner. Wash toner stains immediately with cold water.*
- *We recommend that you put the drum unit assembly on a piece of disposable paper or cloth in case you accidentally spill the toner.*
- *Handle the toner cartridge carefully. If toner scatters on your hands or clothes, wipe or wash it off with cold water immediately.*
- *Do not touch the shaded parts shown in the figure below to avoid any degradation to the print quality.*

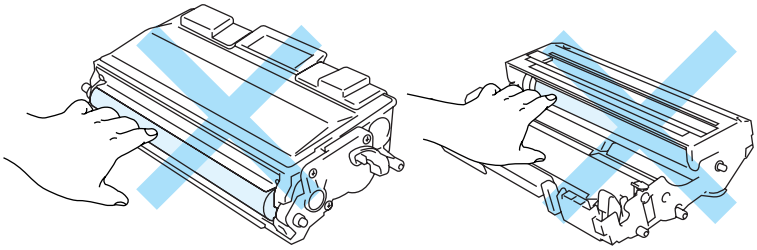

- *To prevent damage to the printer from static electricity, do not touch the electrodes shown in the figure below.*

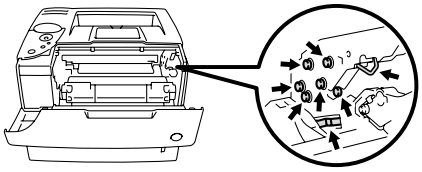

JAM REAR (paper jam behind the back output tray)

(1) Press the cover release button and then open the front cover of the printer.

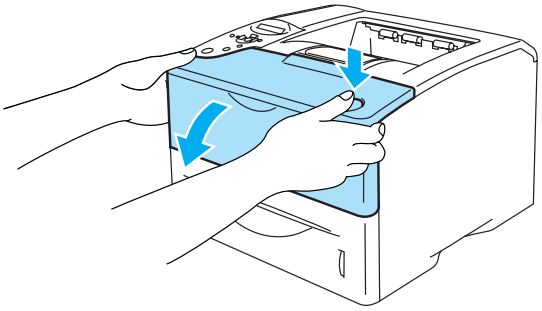

Fig. 6-10

(2) Take out the drum unit assembly (drum unit with the toner cartridge).

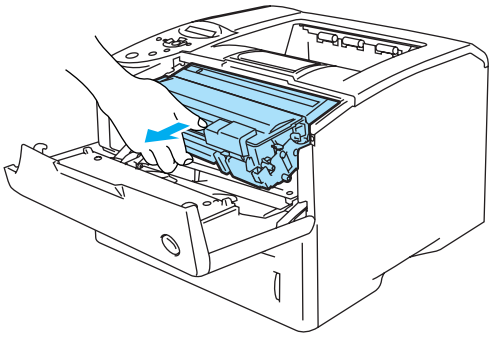

Fig. 6-11

CAUTION:

- *We recommend that you place the drum unit assembly on a piece of disposable paper or cloth in case you accidentally spill or scatter toner.*
- *To prevent damage to the printer from static electricity, do not touch the electrodes shown in the figure below.*

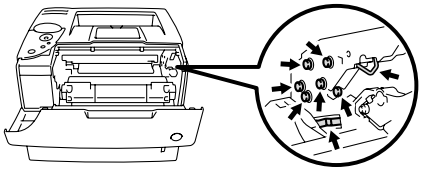

(3) Use both hands to slowly pull out the jammed paper.

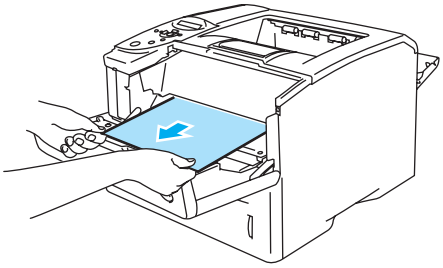

Fig. 6-12

(4) Open the back output tray.

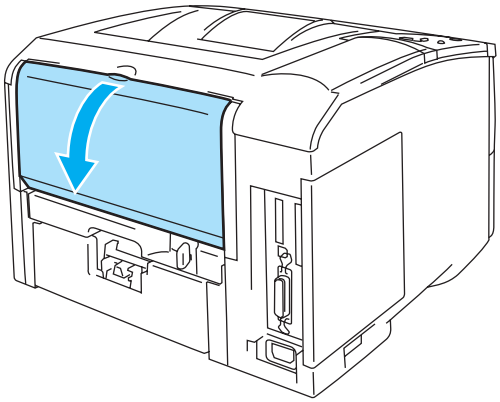

Fig.6-13

(5) Push down the blue tabs at the left and right had sides.

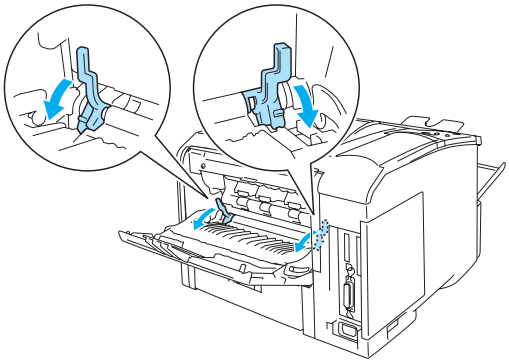

Fig.6-14

(6) Open the jam clear cover by pushing the levers inward at the left and right hand sides. Pull the jammed paper out of the fuser unit.

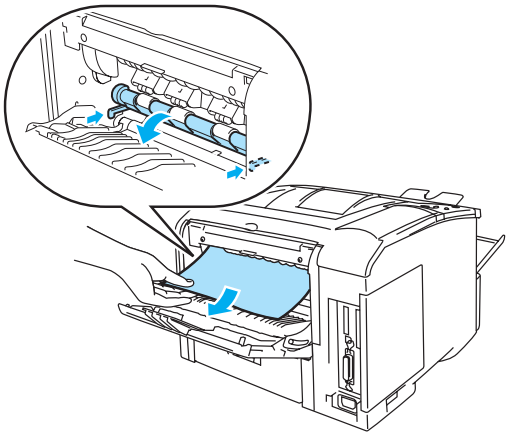

Fig.6-15

(7) Close the jam clear cover.

(8) Close the back output tray.

(9) Put the drum unit assembly back in the printer (press firmly).

(10) Close the front cover of the printer.

CAUTION:

After you have just used the printer, some parts inside the printer are extremely hot. When you open the front cover of the printer, never touch the fuser or the fixing roller.

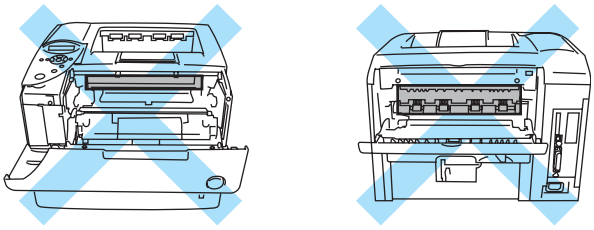

JAM DUPLEX (paper jam in the duplex unit)

(1) Open the back output tray.

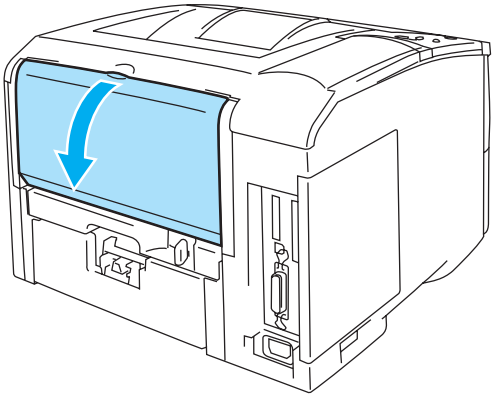

Fig. 6-16

(2) Pull the jammed paper out of the fuser unit.

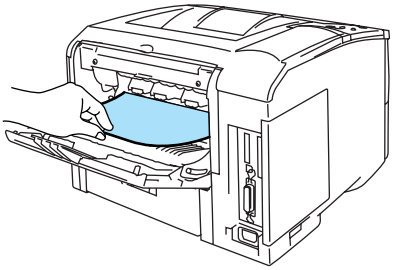

Fig. 6-17

(3) Close the back output tray. If the paper jam cannot be cleared, go to the next step.

(4) Pull the duplex tray and paper tray out of the printer.

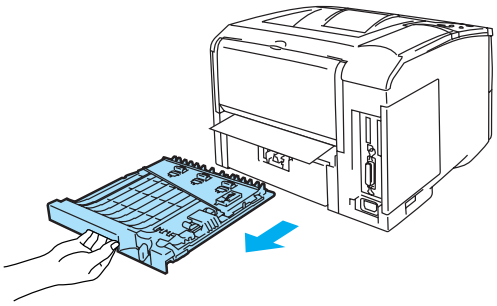

Fig. 6-18

(5) Pull the jammed paper out of the printer.

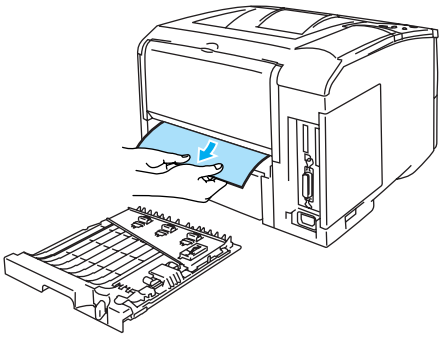

Fig. 6-19

(6) Put the duplex tray and paper tray back in the printer.

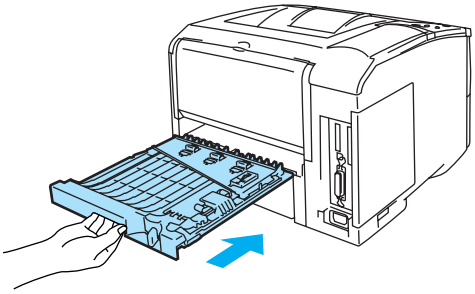

Fig. 6-20

NOTE:

- *The JAM DUPLEX message appears if you remove a sheet of paper from the face down output tray after only one side has printed.*
- *The paper sizes you can use for the duplex printing function are A4, Letter or Legal.*
- *If the paper adjustment lever for duplex printing is not set correctly for the paper size, paper jams may occur and printing will be out of position on the page.*

3.2.2 Causes & countermeasures

The causes for paper jam problems vary depending on the location of the paper jam. When a paper jam occurs inside the printer, you have to find the location of the paper jam first, remove the jammed paper and then take the appropriate countermeasure referring to the table below;

Problem	Type of Jam	Cause	Remedy
Jam when the printer is turned on.	Paper stuck	The front registration sensor or paper eject sensor is turned on.	Remove the paper inside the printer. If there is no paper, check the suspect sensors referring to subsection 3.2 'TEST MENU/ SENSOR TEST' in Chapter7.
Top of paper stopped at 350mm from the second exit roller. Next paper is not fed.	Jam caused by paper length detected as longer than 400mm (16 in).	The front registration sensor is not returning properly and is not turning off.	Check front registration sensor motion referring to subsection 3.2 'TEST MENU/ SENSOR TEST' in Chapter7.
Bottom of paper stopped around the transfer roller.	Jam caused by paper length detected as shorter than 80mm.	The front registration sensor was turned off early. Malfunction of actuator or hardware noise.	Check the front registration sensor referring to subsection 3.2 'TEST MENU/ SENSOR TEST' in Chapter7.
Top of paper stopped between the paper feed roller and the pick-up roller.	Jam caused by a paper feed delay.	Paper was not fed in at the proper timing due to paper dust or wear of the rubber pick-up roller.	Remove the paper dust attached to the pick-up roller. If the rubber is worn out, replace it with a new one.
Top of paper stopped at 50mm from the contact point of the heat roller and pressure roller.	Jam caused by the paper not being sensed when ejected from the paper eject sensor.	The paper eject sensor is not working properly and has not turned off. (single printing)	Check sensor motion referring to subsection 3.2 'TEST MENU/ SENSOR TEST' in Chapter7.
Jam after paper is ejected.	Jam caused by the paper not being sensed when ejected from the paper eject sensor.	The paper eject sensor or front registration sensor is not working properly and has not turned off. (continuous printing)	Check sensor motion referring to subsection 3.2 'TEST MENU/ SENSOR TEST' in Chapter7.

3.3 Paper Feeding Problems

Even if the paper is printed and ejected without any problems such as paper jams, paper feeding problems below may appear.

Users can clear these problems by following the 'User Check' items for each problem. Even if the same problem occurs again, follow the procedures in the table below.

F-1	Double feeding

User Check

Check the paper used meets the recommended paper specifications.

Possible cause	Step	Check	Result	Remedy
Separation pad	1	Is the surface of the separation pad worn out?	Yes	Replace the paper feeding kit.

F-2	Wrinkles or creases

User Check

(1) Check that paper is loaded into the paper tray correctly.

(2) Check the paper used meets the recommended paper specifications.

(3) Try printing using the straight-through output path.

(4) Turn over the stack of paper in the tray or try rotating the paper 180° in the tray.

Possible cause	Step	Check	Result	Remedy
Paper	1	Is the problem solved if new paper is used?	Yes	Instruct the user how to store paper so that it does not absorb moisture.
Fixing unit entrance guide	2	Is the entrance guide dirty?	Yes	Clean the entrance guide.
Fixing unit	3	Is the pressure roller dirty?	Yes	Clean the pressure roller.
			No	Replace the fixing unit.

F-3	Page skew

User Check

(1) Check that the paper or other media is loaded into the paper tray correctly and that the paper guides are not too tight or too loose against the paper stack.

(2) If using the manual feed slot, check how to load paper into the manual feed slot correctly.

(3) The paper tray may be too full. Load paper below 53 mm in depth.

(4) Check the paper used meets the recommended paper specifications.

F-4	Curl or Wave

User Check

(1) Check the paper used meets the recommended paper specifications. Both high temperature and humidity will cause paper to curl.

(2) If the printer is used infrequently, the paper may have sat for too long in the paper tray. Turn over the stack of paper in the paper tray. Also, try rotating the paper 180° in the paper tray.

(3) Try printing using the straight-through output path.

NOTE:

For no paper supplied as the cause of a malfunction, see M-3 'No paper supplied' in 5. 'MALFUNCTIONS' in this Chapter.

F-5	Prints only single side of the paper when duplex printing

User Check

Check the size of the paper used meets the recommended paper specifications (A4 or Letter).

4. SOFTWARE SETTING PROBLEMS

The printer may not print the data correctly if there are incorrect software settings.

S-1	"There was an error writing to LPT1: (or BRUSB) for the printer" error message appears.

User Check

(1) Check that the printer cable is not damaged or broken. Check also that the cable is connected to the correct interface connectors of both the printer and PC.

(2) Check that the correct printer is selected if you have an interface switching device.

(3) Check that the appropriate printer driver is selected as 'Set as Default'. Check also that the correct print port is set for the selected printer driver.

(4) Check that the printer is not connected to the same port which is also connected to a mass storage device or scanner. Remove all other devices and connect the port to the printer only. Turn off the printer status monitor in the device options tab in the printer driver.

(5) If the print port is set as an ECP port, change it to a normal port.

(6) Try printing the test page referring to subsection 4.5.1 'Information' "PRINT TEST" in Chapter 2.

(7) Try resetting the factory settings.

Possible cause	Step	Check	Result	Remedy
Failure inside the printer	1	Is it possible to print the test page with the method of subsection 4.5.1 'Information' "PRINT TEST" in Chapter 2?	No	Identify the error type, then refer to the specified section of this chapter.
Main PCB failure	2	Is it possible to print with another PC and printer cable?	No	Replace the main PCB.
			Yes	This problem may appear under the specified system environment. Check the environment which the user used.

S-2	Unable to print from application software under DOS.

User Check

(1) Check that the DOS application software interface settings match that of your printer.

(2) Check if the printer has any printer alarms active.

(3) Check if the appropriate printer is selected in your application software.

Possible cause	Step	Check	Result	Remedy
Failure inside the printer	1	Is it possible to print the test page with the method of subsection 4.5.1 'Information' "PRINT TEST" in Chapter 2?	No	Identify the error type, then refer to the specified section of this chapter.
Main PCB failure	2	Is it possible to print with another PC and printer cable?	No	Replace the main PCB.
			Yes	This problem may appear under the specified system environment. Check the environment which the user used.

S-3	Unable to print from application software with an Apple Macintosh Computer.

User Check

(1) Check that the supplied Macintosh printer driver is installed in the System Folder and it is selected with Chooser.

(2) Check the PORT selection within the Chooser. It should match the port to which you physically attached the printer cable.

Possible cause	Step	Check	Result	Remedy
Failure inside the printer	1	Is it possible to print the test page with the method of subsection 4.5.1 'Information' "PRINT TEST" in Chapter 2?	No	Identify the error type, then refer to the specified section of this chapter.
Main PCB failure	2	Is it possible to print with another PC, printer cable?	No	Replace the main PCB.

S-4	This printer does not appear in Chooser with iMac and Power Macintosh G3/G4 with USB.

User Check

(1) Check the printer is turned on.

(2) Check the USB interface cable is connected correctly.

(3) Check the printer driver is installed correctly.

Possible cause	Step	Check	Result	Remedy
Printer connection	1	Select 'Apple System Profiler' in Apple Menu. Are the following items indicated in the USB box of the Device and Volumes tab? • Product ID: HL-6050 (0X24), HL-6050D/6050DN (0X25) • Vender: Brother International Corporation (or 0x4f9)	No	Check the printer is turned on and the USB interface cable is connected correctly. Check that the USB cable used is the shielded twisted pair type and 5 m or less. Try to connect the printer and PC with the USB cable directly.
Driver installation	2	Are there the following files in the Extensions Folder of System Folder? <For System 8.6 or higher> • BR_Backgrounder • BR_PrintMoniter(USB) • HL-6050/6050D/6050DN • USBPrintDriver <For System 8.1, 8.5, 8.51> • BR_Backgrounder • BR_PrintMoniter(USB) • HL-6050/6050D/6050DN • USBPrintDriver(BRB)	No	Try to re-install the printer driver.
			Yes	Turn off the printer and PC power switch, and check all connections between them. Then, turn them on again.

**NOTE:*
The value or alphabet following 'BR' is a product ID.

5. MALFUNCTIONS

When taking countermeasures for malfunctions as described in this section, check connectors for contact failure before measuring the voltage at the specified connector pins.

M-1	No light or abnormal light on LCD

M-1-1	Main PCB LED is OFF

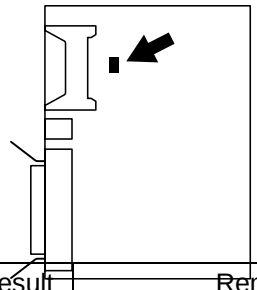

Possible cause	Step	Check	Result	Remedy
Supply voltage	1	Is the correct voltage present at the outlet?	No	Inform the user that the correct voltage is not supplied at the outlet.
Harness connection failure	2	Is the connection of connector CN4 on the main PCB correct?	No	Reconnect the connector.
Low-voltage power supply PCB	3	Is the problem solved by replacing the low-voltage power supply PCB?	Yes	Replace the low-voltage power supply PCB.

M-1-2	Main PCB LED is ON (Dimmed)

Possible cause	Step	Check	Result	Remedy
Main PCB	1	Is the problem solved by replacing the main PCB?	Yes	Replace the main PCB.

M-1-3	Main PCB LED is ON (Fully lit up)

Possible cause	Step	Check	Result	Remedy
Harness connection failure	1	Is the connection of connector CN3 on the main PCB correct?	No	Reconnect the connector.
Panel unit	2	Is the problem solved by replacing the panel unit?	Yes	Replace the panel unit.

⚠ *WARNING*

If you analyze malfunctions with the power plug inserted into the power outlet, special caution should be exercised even if the power switch is OFF because it is a single pole switch.

M-2	Main motor does not rotate

Possible cause	Step	Check	Result	Remedy
Failure of connector	1	Is the connection of connector CN2 on the engine PCB correct?	No	Reconnect the connector.
Main motor	2	Is the problem solved by replacing the main motor?	Yes	Replace the main motor.
Engine PCB	3	Is the problem solved by replacing the engine PCB?	Yes	Replace the engine PCB.
Main PCB	4	Is the problem solved by replacing the main PCB?	Yes	Replace the main PCB.

M-3	No paper supplied

Possible cause	Step	Check	Result	Remedy
Separation pad / pick-up roller failure	1	Is the surface of the separation pad or the pick-up roller dirty or worn out?	Yes	1) Clean the surface of the separation pad or pick-up roller. 2) Replace the separation pad or pick-up roller.
Failure of connector	2	Is the contact of the solenoid connector on the engine PCB good?	No	Reconnect the connector.
Engine PCB circuit	3	Set paper in the manual paper slot and make a test print by pressing the control panel button.	Yes	Replace the engine PCB.
Paper pick-up clutch solenoid		Does the voltage between pins 2 (SOLENOID) and 1 (24V) of the CN8 connector on the engine PCB change from approx. 24V DC to 0V within the specified time?	No	Replace the paper pick-up solenoid.
Main PCB	4	Is the problem solved by replacing the main PCB?	Yes	Replace the main PCB.

M-4	Insufficient output from high-voltage power supply unit

Possible cause	Step	Check	Result	Remedy
High-voltage contact	1	Do any of the terminals on the high-voltage contacts have dirt or contact burns?	Yes	Clean the terminals.
High-voltage power supply PCB	2	Check the connections of the connector between the high-voltage power supply and the engine PCB are secured correctly.	Yes	Replace the high-voltage power supply PCB
			No	Reconnect the connector between the high-voltage power supply and the engine PCB.

M-5	Fixing heater temperature failure

Possible cause	Step	Check	Result	Remedy
Poor thermistor harness contact	1	Is the contact of connector P6 on the engine PCB good?	No	Reconnect the connector.
Blown thermal fuse	2	Remove the fixing unit and measure the resistance of the thermal fuse. Is it open circuit?	Yes	Replace the fixing unit.
Thermistor failure	3	Is the thermistor installed properly?	Yes	Replace the fixing unit.
			No	Reinstall the thermistor properly.
Halogen heater lamp failure	4	Remove the fixing unit and measure the resistance of the halogen heater lamp. Is it open circuit?	Yes	Replace the halogen heater lamp.

M-6	BD failure

Possible cause	Step	Check	Result	Remedy
Harness connection failure	1	Is connector CN5 on the main PCB secured correctly?	No	Reconnect the connector securely.
			Yes	Replace the laser unit.

M-7	Scanner failure

Possible cause	Step	Check	Result	Remedy
Harness connection failure	1	Is the connection of the scanner motor connector P3 on the engine PCB secure?	No	Reconnect the connector securely.
Power supply input	2	Is the voltage between pins 2 (+24V LPS) and 1 (GND) of connector CN15 on the engine PCB 24V DC?	No	Check if +24V DC is supplied between pins 3 (+24V LPS) and 4 (+24V GND) of connector CN3 on the engine PCB. If not, check the power supply output on the low-voltage power supply PCB.
			Yes	Replace the laser unit.

M-8	Fuser failure

Possible cause	Step	Check	Result	Remedy
Poor thermistor harness contact	1	Is the contact of connector CN4 on the engine PCB good?	No	Reconnect the connector.
Blown thermal fuse	2	Remove the fixing unit and measure the resistance between the input connectors. Is it open circuit?	Yes	Replace the fixing unit.
Thermistor failure	3	Is the thermistor installed properly?	Yes	Replace the fixing unit.
			No	Reinstall the thermistor properly.
Halogen heater lamp failure	4	Remove the fixing unit and measure the resistance of the halogen heater lamp. Is it open circuit?	Yes	Replace the halogen heater lamp.
Heater harness connection failure	5	Is the heater harness connector connected to the low-voltage power supply PCB and fixing unit secure?	No	Reconnect the connectors securely.

NOTE:

- *This problem will be cleared if leaving the printer power ON for ten minutes.*
- *This problem will be cleared as well with the following procedure. Make sure that the heater is cooled down sufficiently. Press the **Go** switch and the **Set** switch together until the back light turns green. "**GO TEST MODE**" will be shown on a display panel by pressing the **Go** switch and the **Set** switch for a while. Turn off the power switch after verifying the "GO TEST MODE" message on a display panel. **Be warned, however, that this operation will melt the fixing unit if the heater is hot.***

M-9	ROM error / D-RAM error / NV-RAM error

Possible cause	Step	Check	Result	Remedy
Main PCB	1	Is it possible to print the test page with the method of subsection 4.5.1 'Information' "PRINT TEST" in Chapter 2?	No	Replace the main PCB.
Software bug	2	Does this problem appear when printing specific data or printing under a specific environment?	Yes	Inform the Brother office of the used specific data, printer condition and system environment.

M-10	SXX error

Possible cause	Step	Check	Result	Remedy
Main PCB	1	Is it possible to print the test page with the method of subsection 4.5.1 'Information' "PRINT TEST" in Chapter 2?	No	Replace the main PCB.
Software bug	2	Does this problem appear when printing specific data or printing under a specific environment?	Yes	Inform the Brother office of the used specific data, printer condition and system environment.

M-11	E41 error

Possible cause	Step	Check	Result	Remedy
Process unit ground wire connection	1	Is the ground wire on the process unit secured correctly?	No	Secure the ground wire correctly with the shoulder screw If the ground wire is bent, fix it to a right shape with a pair of pliers.
Corona failure	2	Is the corona wire on the process unit dirty?	Yes	Clean the corona wire with the wire cleaner.
High-voltage power supply PCB failure	3	Is the high-voltage power supply PCB fixed correctly?	Yes	Reinstall the high-voltage power supply PCB correctly.
Metallic parts failure (electrostatic discharge when feeding paper)	4	Are any metallic parts loose?	Yes	Secure the parts correctly.

6. IMAGE DEFECTS

6.1 Image Defect Examples

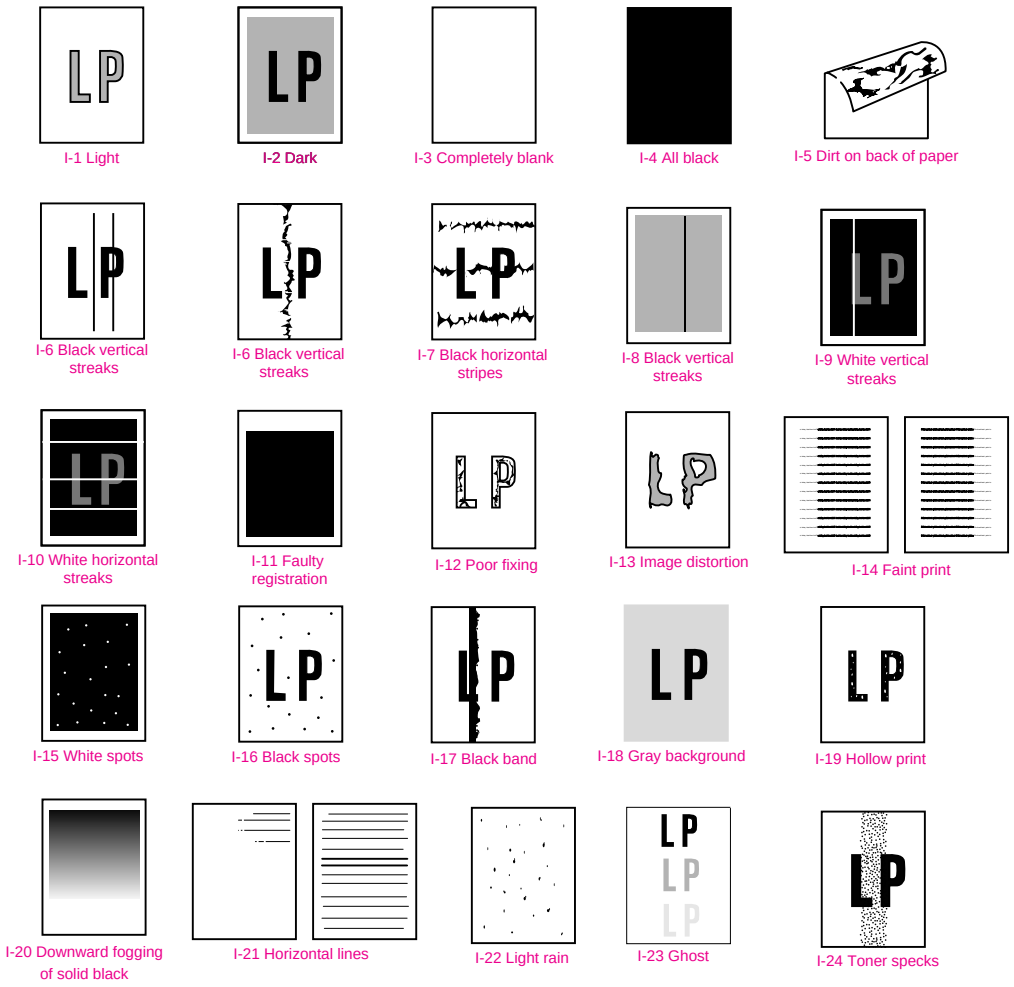

Fig. 6-21

The diameter and circumference of each roller are listed below;

No.	Parts Name	Diameter (Circumference)
1	F Roller AML	ϕ 12.0 mm (37.7 mm)
2	Paper Feed Roller	ϕ 14.0 mm (44.0 mm)
3	Transfer Roller	ϕ 15.20 mm (47.7 mm)
4	Photosensitive Drum	ϕ 29.97 mm (94.1 mm)
5	Heat Roller	ϕ 34.3 mm (107.7 mm)
6	Pressure Roller	ϕ 30.0 mm (94.2 mm)
7	Development Roller	ϕ 20.0 mm (46.5 mm)

6.2 Troubleshooting Image Defect

Several types of the image defects can be cleared by end users. For those defects, instruct the user to check the 'User Check' items described in each table. Even if the same image defect appears, the following procedures should be followed in the event of specific image defects.

See also subsection 6.3 'Location of Ground Contacts' in this Chapter for information about the location of the grounding contacts.

> **CAUTION:**
> *When using the printer for a special job, such as printing of name cards, print quality cannot be guaranteed.*

I-1	Light

LP

User Check

(1) Check the printer's environment. Conditions such as humidity, high temperatures, etc. may cause this situation to occur.

(2) If the whole page is light, toner save mode may be on. Disable toner save mode within Printer Properties tab of the driver.

(3) Try installing a new toner cartridge or drum unit.

Possible cause	Step	Check	Result	Remedy	Ground contacts
Toner sensing failure (printer side)	1	Can printing be started with the drum unit and toner cartridge removed?	Yes	Check if the toner sensor is dirty and check the toner sensor connection.	
Toner sensing failure (toner cartridge side)	2	Is the problem solved when 4 or 5 pages are printed after the toner cartridge is replaced with a full one?	Yes	The wiper of the toner cartridge is defective. Replace the toner cartridge.	
Drum connection failure	3	Are all the contacts between the drum unit and printer body connected correctly?	No	Clean contact electrodes both on the drum unit and in the printer body.	(1), (4), (5), (6)
High-voltage power supply PCB failure	4	Is the harness connection between the high-voltage power supply PCB and the engine PCB correct?	Yes	Replace the high-voltage power supply PCB.	
Engine PCB / Main PCB failure	5	Is the harness connection between the engine PCB and the main PCB correct?	Yes	Replace the engine PCB or the main PCB.	
Dirt on the scanner window	6	Is there any dirt on the scanner window?	Yes	Wipe it off with a soft clean paper.	
Laser unit failure	7	Is the problem solved after replacing the laser unit?	Yes	Replace the laser unit.	

I-2	Dark

LP

User Check

(1) Check the paper used meets the recommended paper specifications.

(2) Check the printer's environment. High temperature and high humidity conditions can increase the amount of background shading.

(3) Clean the corona wire with the wire cleaner.

(4) Try installing a new toner cartridge or drum unit.

Possible cause	Step	Check	Result	Remedy	Ground contacts
Corona failure (contact failure)	1	Are the charge electrodes between the printer body and the drum unit dirty?	Yes	Clean both electrodes.	(3)
Drum unit failure	2	Is the problem solved after replacing the drum unit?	Yes	Replace the drum unit with a new one.	
Toner cartridge failure	3	Is the problem solved after replacing the toner cartridge?	Yes	Replace the toner cartridge with a new one.	
High-voltage power supply PCB failure	4	Is the connections of the connector between the high-voltage power supply PCB and the engine PCB secured correctly?	Yes	Replace the high-voltage power supply PCB.	
Main PCB failure	5	Are there any disconnected connectors?	No	Replace the main PCB.	
Engine PCB failure	6	Are there any disconnected connectors?	No	Replace the engine PCB.	

I-3	Completely blank

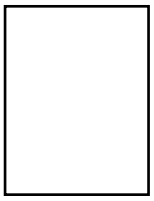

Possible cause	Step	Check	Result	Remedy	Ground contacts
Developing bias contact failure	1	Are the developing bias contacts between the printer body and drum unit dirty?	Yes	Clean the electrodes at both sides.	(4)
Drum unit	2	Are the drum shaft and drum electrode of the printer body connected correctly?	Yes	Clean the shaft and the electrode.	(1)
			No	Check the connection between the shaft and the electrode.	(1)
Drum unit failure	3	Is the problem solved after replacing the drum unit?	Yes	Replace the drum unit.	
Toner cartridge failure	4	Is the problem solved after replacing the toner cartridge?	Yes	Replace the toner cartridge with a new one.	
Scanner harness connection failure	5	Is the scanner harness connected securely? (Check if there is any play in the connection.)	No	Reconnect the connector correctly.	
Main PCB failure	6	Are printing signals being input to the laser unit? Is the problem solved after replacing the main PCB?	Yes	Replace the main PCB.	
Laser unit failure	7	Is the scanner mirror broken or loose?	Yes	Replace the laser unit.	
			No	Replace the high-voltage power supply PCB.	

I-4	All black

[redacted]

User Check

(1) Clean the corona wire of the drum unit.

(2) The drum unit may be damaged. Install a new drum unit.

Possible cause	Step	Check	Result	Remedy	Ground contacts
Corona failure	1	Is the corona wire dirty?	Yes	Clean the corona wire with the wire cleaner.	(2)
	2	Is the corona wire broken?	Yes	Replace the drum unit.	
	3	Are the charge electrodes between the printer body and the drum unit dirty?	Yes	Clean both electrodes.	(3)
Harness connection	4	Is the laser unit connected to the main PCB correctly?	No	Connect the harness between the laser unit and the main PCB correctly.	
High-voltage power supply PCB failure	5	Is the problem solved after replacing the high-voltage power supply PCB?	Yes	Replace the high-voltage power supply PCB.	
Main PCB failure	6	Is the problem solved after replacing the main PCB?	Yes	Replace the main PCB.	

I-5	Dirt on the back of paper

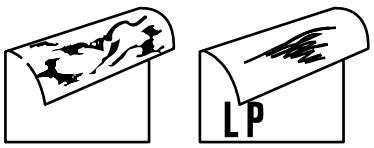

Possible cause	Step	Check	Result	Remedy
Fixing unit dirty	1	Is the pressure roller dirty? Is any other area in the printer dirty?	Yes	Clean the pressure roller referring to the following procedure.
Dirt in the drum unit	2	Is the transfer roller dirty? Is the problem solved after replacing the drum unit?	Yes	Replace the drum unit
			No	Replace the high-voltage power supply PCB.

NOTE:
This problem may disappear after printing approximately 10 pages of completely blank sheets.

How to clean the pressure roller

Clean the pressure roller as follows;

(1) Set three or more sheets of paper in the paper tray.

(2) Turn off the power switch of the printer.

(3) While holding down the **Go** switch, press **–** switch, **+** switch, and then **Set** switch. The LCD display shows “TEST MENU”.

(4) Press the **Set** switch and “SINGLE TEST PRINT” will appear on the LCD display.

(5) Press the **+** switch and “REPEAT TEST PRINT” will appear on the LCD display.

(6) Press the **Set** switch and “TEST PRINT NORMAL” will appear on the LCD display.

(7) Press the **+** switch four times and “TEST PRINT WHITE” will appear on the LCD display.

(8) Press the **Set** switch and release it immediately. A blank page is printed while cleaning the pressure roller.

(9) Press the **Job Cancel** switch after printing three or more pages to stop printing.

I-6	Black and blurred vertical streaks

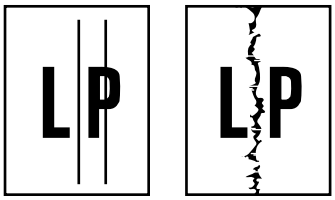

User Check

(1) Clean the corona wire in the drum unit.

(2) Check that the corona wire cleaner is at the home position.

(3) Check that the toner cartridge is not empty.

(4) The drum unit may be damaged. Install a new drum unit.

(5) The toner cartridge may be damaged. Install a new toner cartridge.

Possible cause	Step	Check	Result	Remedy
Corona failure	1	Is the vertical block streak about 10mm wide? (Check if the wire cleaner is at its home position.)	Yes	Return the wire cleaner to its home position.
Dirt in the paper feed system	2	Is the paper tray or feed system on the drum unit dirty with toner?	Yes	Clean the toner off.
Scratch on the drum	3	Is the drum surface scratched?	Yes	Replace the drum unit.
Cleaning failure	4	Is the drum surface dirty with toner in streaks?	Yes	Replace the drum unit.
Scratch on the heat roller	5	Is the surface of the heat roller scratched?	Yes	Replace the fixing unit.

NOTE:

- *If you print the same pattern (especially vertical streaks) continuously, electrostatic charge performance of the drum will decrease temporarily and black vertical streaks may appear on the paper.*
- *This problem may occur with noise due to the corona wire being dirty. In that case, clean the corona wire with the wire cleaner.*

I-7	Black and blurred horizontal stripes

User Check

(1) The drum unit may be damaged. Install a new drum unit.

(2) Check the paper used meets the recommended paper specifications.

(3) Clean the printer interior and the corona wire in the drum unit.

Possible cause	Step	Check	Result	Remedy	Ground contacts
Scratch on the drum	1	Are the horizontal stripes at 94mm (photosensitive drum) intervals?	Yes	The photosensitive drum was scratched. Replace the drum unit.	
Toner stuck on the developer roller	2	Are the horizontal stripes at 39mm (developer roller) intervals?	Yes	After printing several pages, the problem will disappear. If not, replace the toner cartridge.	
Scratch on the heat roller	3	Are the horizontal stripes at 107.7mm (heat roller) intervals?	Yes	Replace the heat roller.	
Corona contact failure	4	Are the charge electrodes between the printer body and the drum unit dirty?	Yes	Clean both electrodes.	(3)
High-voltage power supply PCB failure	5	Is the problem solved after replacing the high-voltage power supply PCB?	Yes	Replace the high-voltage power supply PCB.	

I-8	Black vertical streaks (in a gray background)

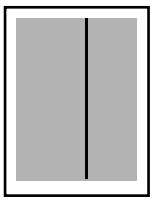

Possible cause	Step	Check	Result	Remedy	Ground contacts
Translucent stain on the scanner window	1	Is there any dirt on the scanner window?	Yes	1) Clean the scanner window. 2) If it is not effective, replace the laser unit.	
Corona failure	2	Is the corona wire dirty?	Yes	Clean the corona wire with the wire cleaner.	(2)

I-9	White vertical streaks

User Check

(1) Try to wipe the scanner window with a soft cloth.

(2) The toner cartridge may be damaged. Install a new toner cartridge.

(3) Check the printer's environment. High temperature and high humidity conditions can cause this problem.

(4) Damp (wet) paper might be used. Try to change to freshly unpacked paper.

Possible cause	Step	Check	Result	Remedy
Transfer failure	1	Is the transfer roller scratched?	Yes	Replace the drum unit.
Condensation	2	Has condensation occurred inside the printer?	Yes	Try to print several pages or leave the printer 2 hours to allow it to reach room temperature.

I-10	White horizontal stripes

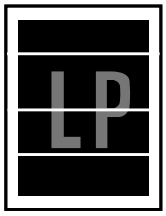

User Check

(1) Check the paper used meets the recommended paper specifications. A rough surfaced paper, damp paper or thick media can cause the problem.

(2) Check that the appropriate media type is selected in the printer driver.

(3) The problem may disappear by itself. Try printing multiple pages to clear this problem especially if the printer has not been used for a long time.

(4) The drum unit may be damaged. Install a new drum unit.

Possible cause	Step	Check	Result	Remedy	Ground contacts
Developing bias contact failure	1	Are the developing bias contacts between the printer body and toner cartridge dirty?	Yes	Clean the electrodes at both sides.	(4)

I-11	Faulty registration

Possible cause	Step	Check	Result	Remedy
Excessive paper load	1	Is the paper loaded in the paper tray more than 27mm high?	Yes	Instruct the user to keep paper loads below 27mm in depth.
Print paper	2	Is the specified weight of the recommended paper being used?	No	Recommend to use the specified types of paper.
	3	Is the first printing position within ±1mm of the tolerance specification?	Yes	Adjust the Y offset by using the utility software supplied.
Rear regist sensor position incorrect	4	Is the rear registration sensor off from the correct position?	Yes	Reposition the sensor to the correct position.

I-12	Poor fixing

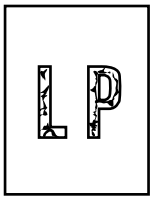

Possible cause	Step	Check	Result	Remedy
Print paper	1	Is thick paper of more than 43lb being used?	Yes	Recommend to use the specified types of paper.
Toner sensing failure (When printing is faint.)	2	Is the problem solved by replacing the drum unit or the toner cartridge?	Yes	1) Toner is empty. 2) The toner sensing is defective. Clean the toner sensor. 3) If the wiper in the toner cartridge is broken, replace the toner cartridge with a new one.
Fixing unit thermistor failure	3	Is the thermistor fitted correctly?	No	Fit the thermistor correctly.
Low-voltage power supply PCB failure	4	Is the problem solved by replacing the low-voltage power supply PCB?	Yes	Replace the low-voltage power supply PCB.

I-13	Image distortion

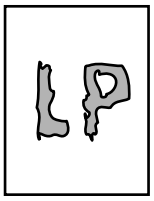

Possible cause	Step	Check	Result	Remedy
Laser unit installation	1	Is the laser unit secured to the frame incorrectly? (Check if there is any play.)	Yes	Secure the unit correctly and tighten the screws.
Scanner LD emission failure Scanner motor rotation failure	2	Is the laser diode or the scanner motor defective?	Yes	Replace the laser unit.
Scanner connection failure	3	Is the scanner harness connected properly? (Check if it is coming loose.)	No	Connect the harness correctly.

I-14	Faint print

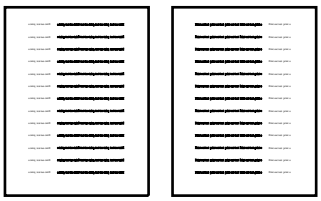

Possible cause	Step	Check	Result	Remedy
Printer installation	1	Is the printer placed horizontally?	No	Place the printer on a flat surface.
Toner cartridge	2	Does the problem happen immediately after replacing the toner cartridge with a new one?	Yes	Remove and carefully shake the toner cartridge horizontally.
Scanner window dirty	3	Is the scanner window dirty?	Yes	Clean the scanner window with a soft dry cloth.
Laser unit failure	4	Is the problem solved by replacing the laser unit?	Yes	Replace the laser unit.

I-15	White spots

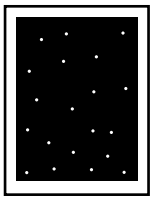

User Check

(1) If the problem is not solved after printing a few pages, the drum unit may have glue from label stock on the photosensitive drum surface. Refer to Step 1 in the table below and NOTE in the next page.

(2) The drum unit may be damaged. Install a new drum unit.

Possible cause	Step	Check	Result	Remedy
Drum unit failure	1	Are the white spot at 94mm intervals?	Yes	1) If toner or glue remains stuck, wipe it off gently with a cotton swab. (Refer to NOTE in the next page.) 2) If the drum surface is scratched, replace the drum unit.
Drum unit failure	2	Is the problem solved after replacing the drum unit?	Yes	Replace the drum unit.
No toner	3	Is the toner in the toner cartridge almost empty?	Yes	Replace the toner cartridge with a new one.
Print paper	4	Is the problem solved after changing to specified freshly unpacked paper?	Yes	Damp (wet) paper might be used. Recommend to change freshly unpacked paper.
Environment	5	Does the problem still appear after the printer has warmed up?	Yes	1) Replace the drum unit. 2) Advise the user of the specified print environment.

NOTE:

Clean the drum unit as follows:

(1) Remove the toner cartridge from the drum unit. Place the printing samples in front of the drum unit, and find the exact position of the image defect.

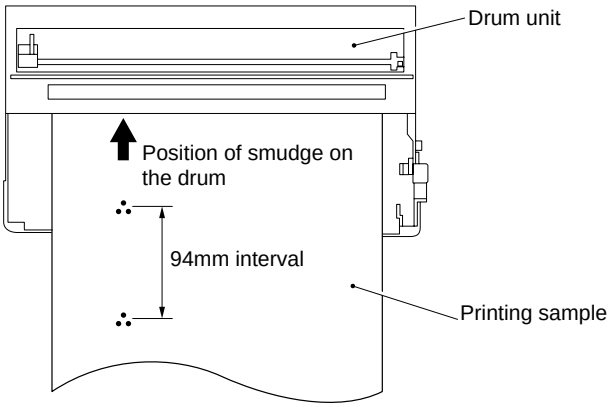

Fig. 6-22

(2) Turn the drum gear by hand while looking at the surface of the photosensitive drum.

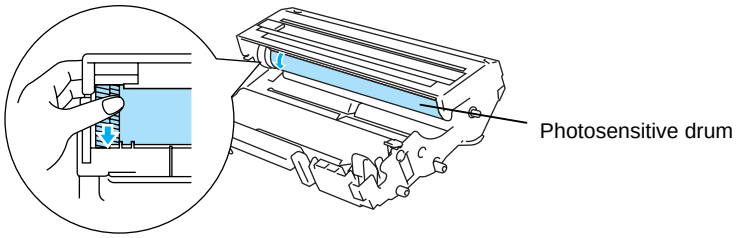

Fig. 6-23

(3) Wipe the surface of the photosensitive drum with a cotton swab until the dust or paper powder on the surface comes off.

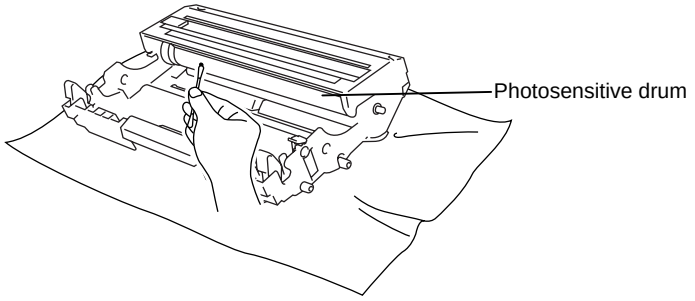

Fig. 6-24

CAUTION:

- *Do not wipe the surface of the photosensitive drum with something sharp. (ball-point pen etc.)*
- *Use cleaning liquid which is a 50-50 mixture of ethyl alcohol and pure water.*

I-16	Black spots

User Check

(1) If the problem is not solved after printing a few pages, the drum unit may have glue from label stock on the photosensitive drum surface. Refer to Step 1 in the table below and NOTE in the previous page.

(2) The drum unit may be damaged. Install a new drum unit.

Possible cause	Step	Check	Result	Remedy	Ground contacts
Drum unit	1	Are the spots at 94mm intervals? (The problem is not solved after printing a few pages.)	Yes	1) If toner or glue remains stuck, wipe it off gently with a cotton swab. (Refer to NOTE in the previous page.) 2) If the photosensitive drum is scratched or deteriorated (exposed), replace the drum unit.	
Drum connection failure	2	Is the contact between the drum unit and printer body connected correctly?	No	Clean contact electrode both on the drum unit and in the printer body.	(8)
Fixing unit	3	Are the spots at 107.7mm intervals? (The problem is not solved after printing a few pages.)	Yes	1) Check and clean the heat roller with a cloth dampened with alcohol. 2) Replace the fixing unit.	
High-voltage power supply PCB failure	4	Is the problem solved after replacing the high-voltage power supply PCB?	Yes	Replace the high-voltage power supply PCB.	

I-17	Black band

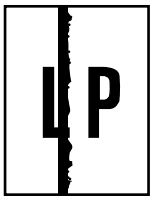

Possible cause	Step	Check	Result	Remedy	Ground contacts
Corona failure	1	Is the wire cleaner at its home position?	No	Return the wire cleaner to its home position.	(2)
Corona failure	2	Is the corona wire dirty?	Yes	1) Clean the corona wire. 2) If the problem still appears after cleaning, replace the drum unit.	(2)

I-18	Gray background

LP

Possible cause	Step	Check	Result	Remedy
Print paper	1	Does the paper being used meet the paper specification (weight, etc.).	No	Recommend to use the specified types of paper.
			Yes	Recommend to change to freshly unpacked paper.
Toner sensing failure (printer side)	2	Does the “Ready” message appear on the LCD display even after removing the drum unit and toner cartridge?	Yes	Toner sensor failure. Clean the toner sensor and check the toner sensor connection.
Toner cartridge failure	3	Is the problem solved after replacing the toner cartridge?	Yes	Replace the toner cartridge.
Drum unit failure	4	Is the problem solved after replacing the drum unit?	Yes	Replace the drum unit.
			No	Replace the high-voltage power supply PCB.

NOTE:
The following cases increase the possibility of this problem.

- *Acid paper is being used.*
- *The drum unit is at the end of its life.*
- *There is dust or paper powder.*

I-19	Hollow print

LP

User Check

(1) Check the paper used meets the recommended paper specifications.

(2) Select the ‘Thick paper mode’ in the printer driver, or use thinner paper than you are currently using.

(3) Check the printer’s environment, conditions such as high humidity may cause this situation to occur.

Possible cause	Step	Check	Result	Remedy
Print paper	1	Is thick paper of more than 43lb being used or extremely rough surface paper?	Yes	Recommend to use the specified types of paper.
			No	Refer and compare with I-15.

I-20	Downward fogging of solid black

Possible cause	Step	Check	Result	Remedy
Toner cartridge failure	1	Is the problem solved after replacing the toner cartridge?	Yes	Replace the toner cartridge.
High-voltage power supply PCB failure	2	Is the problem solved after replacing the high-voltage power supply PCB?	Yes	Replace the high-voltage power supply PCB.

I-21	Horizontal lines

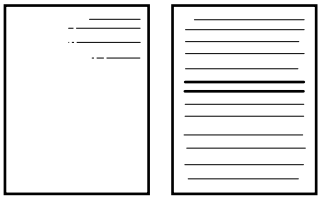

Possible cause	Step	Check	Result	Remedy	Ground contacts
Paper tray contacts	1	Are the ground contacts on the back side of the paper tray connecting correctly?	No	Clean the contacts.	(9)

I-22	Light rain

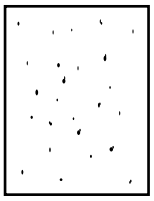

Possible cause	Step	Check	Result	Remedy	Ground contact
Drum unit failure	1	Is the problem solved after replacing the drum unit?	Yes	Replace the drum unit.	
Drum connection failure	2	Is the contact between the drum unit and printer body connected correctly?	No	Clean contact electrode both on the drum unit and in the printer body.	(8)
High-voltage power supply PCB failure	3	Is the problem solved after replacing the high-voltage power supply PCB?	Yes	Replace the high-voltage power supply PCB.	

I-23	Ghost

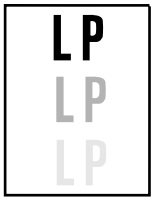

User Check

(1) Check the paper used meets the recommended paper specifications. Damp paper, thick media or rough surfaced paper can cause the problem.

(2) Check the printer's environment. High temperature and high humidity conditions can cause the problem.

(3) Check that the appropriate media type is selected in the printer driver.

(4) Try installing a new drum unit.

Possible cause	Step	Check	Result	Remedy
Driver setting	1	Is thin paper such as 64g/m^2 used under the thick paper mode?	Yes	1) Change the current mode to the normal mode from the driver setting. 2) Print 5 or 6 blank pages if this problem occurs.
Drum unit failure	2	Is the problem solved after replacing the drum unit?	Yes	Replace the drum unit.
High-voltage power supply PCB failure	3	Is the problem solved after replacing the high-voltage power supply PCB?	Yes	Replace the high-voltage power supply PCB.

I-24	Toner specks

User Check

(1) Check the paper used meets the recommended paper specifications. A rough surfaced paper may cause the problem.

(2) The toner cartridge may be damaged. Install a new toner cartridge.

(3) The drum unit may be damaged, or may be nearly at the end of life. Install a new drum unit.

6.3 Location of Grounding Contacts

6.3.1 Process unit

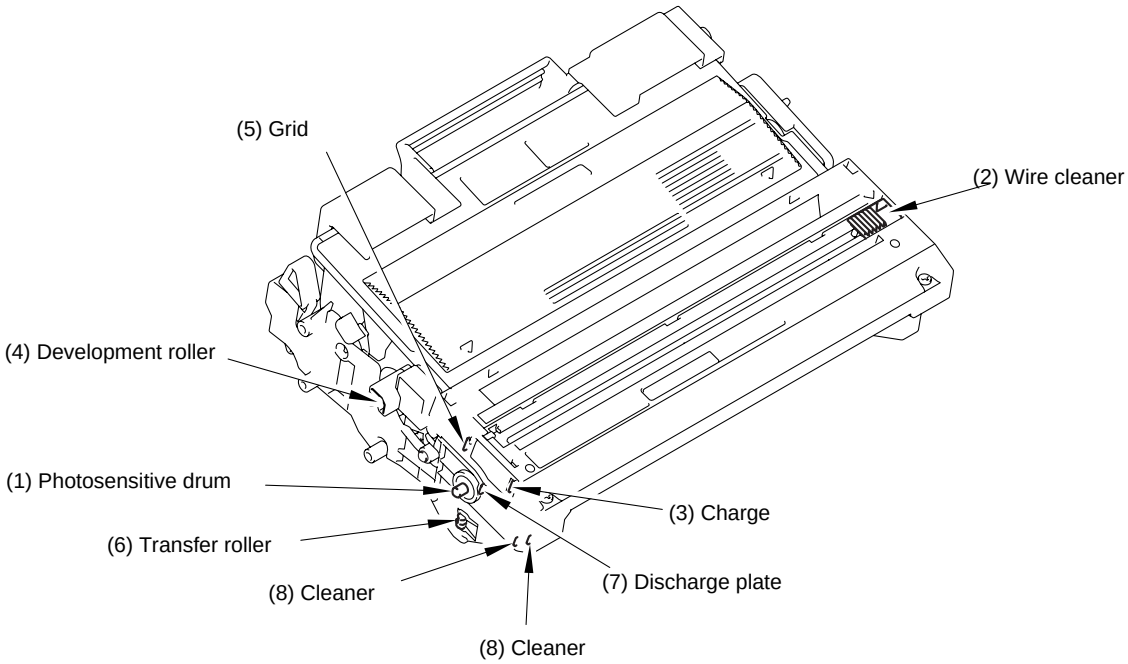

Fig. 6-25

6.3.2 Printer body & Paper tray

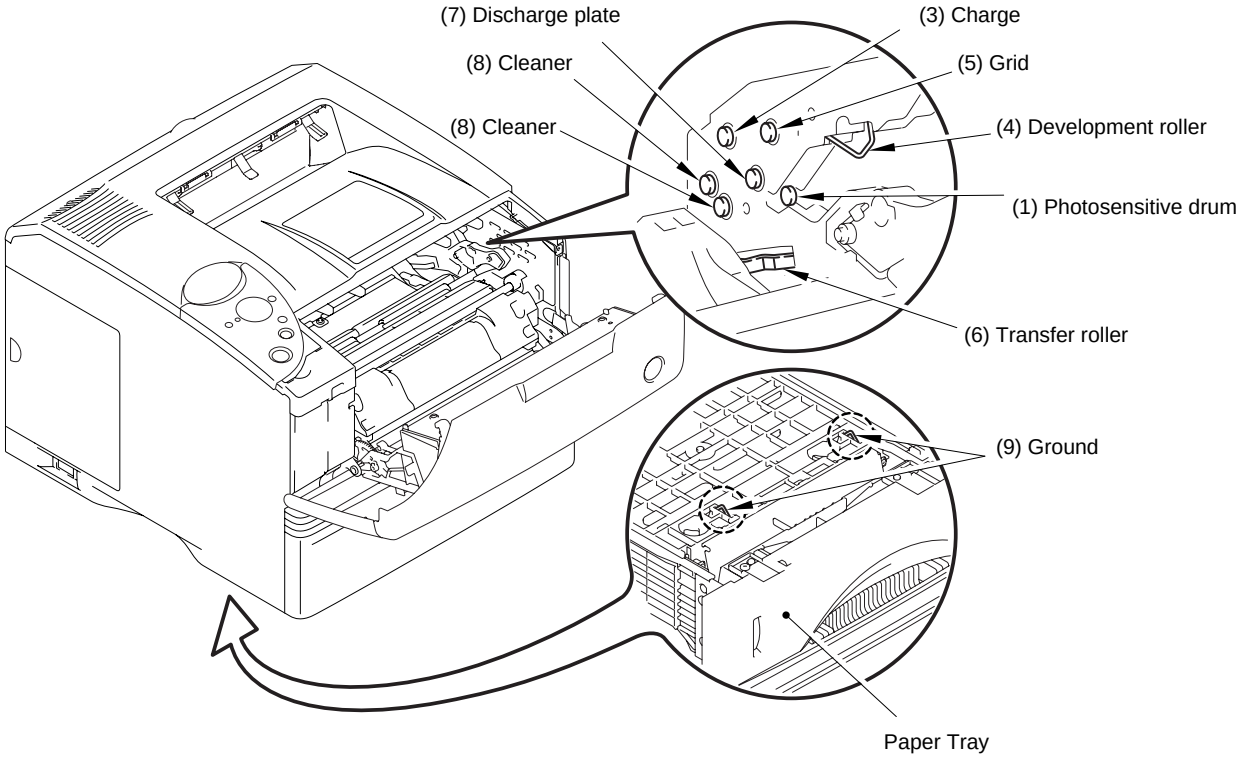

Fig. 6-26

7. INCORRECT PRINTOUT

When the data is not printed correctly as it is seen on the PC screen, follow the procedures below in the event of a specific error.

P-1	The printer prints unexpectedly or it prints garbage.

User Check

(1) Check if the printer cable is not too long. It is recommended to use a parallel cable of less than 2 meters (6.6 feet) in length.

(2) Check that the printer cable is not damaged or broken. Check also that the printer cable is connected to the correct interface connectors of both the printer and PC.

(3) If an interface switching device is used, remove it and connect the computer directly to the printer and try again.

(4) Check that the appropriate printer driver is selected as 'Set as Default'. Check also that the correct print port is set for the selected printer driver.

(5) Check that the printer is not connected to the same port which is also connected to a mass storage device or scanner. Remove all other devices and connect the port to the printer only. Turn off the printer status monitor in the device options tab in the printer driver.

(6) If the print port is set as an ECP port, change it to a normal port.

(7) Try printing the test page referring to subsection 4.5.1 'Information' "PRINT TEST" in Chapter 2.

(8) Try resetting the factory settings.

Possible cause	Step	Check	Result	Remedy
Failure inside the printer	1	Is it possible to print the test page with the method of subsection 4.5.1 'Information' "PRINT TEST" in Chapter 2.	No	Identify the error type, then refer to the specified section of this chapter.

NOTE:

If the printer prints garbage or incorrect fonts, instruct the user to use the 'Troubleshooting for Printer won't print' tool of the self-diagnostics tools. If the problem cannot be solved, instruct user to use the 'Diagnostics' tool described in the Appendix so that you can get a log file to investigate the cause of the problem. For details on the self-diagnostics tools, see 6. 'HOW TO USE SELF-DIAGNOSTICS TOOLS" IN CHAPTER7.

P-2	Unable to print full pages of a document with the “PRINT OVERRUN” message.

User Check

(1) Press the **Go** switch on the control panel to print the data remaining in the printer.

(2) If this does not clear the error, reduce the complexity of your document or reduce the printer resolution.

(3) Expand the printer memory by adding a commercially available DIMM.

(4) Change the following setting in the printer driver and try again. The best combination of settings below will vary depending on your document.

Graphic Mode / TrueType™ mode / Use Printer TrueType™ Fonts.

NOTE:

This problem may appear if the data is too complex. If it is not cleared by taking the actions above, it will be impossible to print such data under the printer specifications.

P-3	Unable to print full pages of a document with the “MEMORY FULL” message.

User Check

(1) Press the **Go** switch on the control panel to print the data remaining in the printer.

(2) Reduce the complexity of your document or reduce the printer resolution.

(3) Expand the printer memory by adding a commercially available DIMM.

NOTE:

This problem may appear if the data is too complex.

Possible cause	Step	Check	Result	Remedy
Unable to recognize DIMM	1	Check the memory size in Print Configuration. Is it the default size?	Yes	Expand the memory size by adding DIMM. If the memory is already at the maximum size, it will be impossible to print the data under the printer specifications.
DIMM / main PCB failure	2	Try installing DIMM into another printer, then check the memory size in Print Configuration. Is it possible to print the data?	Yes	Replace the DIMM.
			No	Replace the main PCB.

P-4	Headers or footers are not printed out even though they are viewed on PC screen.

User Check

Most laser printers have a restricted area that cannot be printed on. Usually the first two lines and last two lines of text cannot print (leaving 62 printable lines). Adjust the top and bottom margins in your document to allow for this.

P-5	The printer sometimes prints a couple of characters and then ejects the page.

User Check

(For DOS environment only)

The application printer emulation setting and the printer's emulation do not match. Check in the application software which printer you have selected to make sure the printer is set up correctly. Remember that the printer emulates widely used printer selections:

HP LaserJet, Brother BR-Script Level 3, Epson FX-850, IBM Proprinter XL

Try setting the printer into HP emulation and then select the HP LaserJet 6P printer in the application software.

8. NETWORK PROBLEM

If the error related to network occurs, refer to the following sections;

8.1 Installation Problem

If you cannot print over the network, check the following:

(1) Make sure that the printer is powered on, is on-line and ready to print.

Verify that the printer and the configuration are good by printing the printer settings page. (To print the printer settings page press the Network Test button for less than 5 seconds. See section 5. 'NETWORK BOARD OPERATION' in CHAPTER 2.) If the test fails, the network firmware setting may be corrupted. In this event, try to restore the factory default settings of the print server by pressing the Network Test button on the back panel of the printer for more than 5 seconds. Once you have done that, turn the printer power off and then on again, and try to print out the printer settings page.

(2) If the printer settings page is printed but you cannot print documents, try the following

NOTE:

If none of the following steps are successful, there is almost certainly a hardware or network problem!

a) If you are using TCP/IP:

Try pinging the print server from the host operating system command prompt with the command

ping *ipaddress*,

Where *ipaddress* is the print server IP address (note that in some instances it can take up to two minutes for the print server to load its IP address after setting the IP address). If a successful response is received, then proceed to the *UNIX, TCP/IP Windows NT 4.0/LAN Server, Windows98/95/Me Peer to Peer (LPR), Internet Printing or Web Browser troubleshooting section.* Otherwise, proceed to step (3), and then go to subsection 8.3 'TCP/IP Troubleshooting'.

b) If you are using Novell system:

Verify that the print server can be seen on the network. To do this, login as the SUPERVISOR (not as someone with supervisor privileges) or ADMIN (for Netware 4 or later servers), go into PCONSOLE or NWADMIN, select PRINT SERVER INFORMATION, and select the name of the print server (make sure that you have entered the print server name). If you can see Print Server Status and Control in the menu, then the Brother print server is visible to the network, proceed to subsection 8.11 'Novell NetWare Troubleshooting'. Otherwise, go to step (3).

c) If you are running AppleTalk for Macintosh:

Make sure that you can see the print server name under the LaserWriter 8 icon in the Chooser. If it is visible, then the connection is good, so proceed to subsection 8.12 'AppleTalk Troubleshooting'. Otherwise, go to step (3). If you use the 'Simple Network Configuration Capabilities of Apple® Mac OS® X' function, please visit the Brother Solutions Center web site on: http://solutions.brother.com

(3) If you cannot make any of the connections in step (2), check the following:

a) Make sure the printer is turned on and on-line.

b) Check the cabling, network connection, and print out a configuration page in the Network Statistics information to see if bytes are being transmitted and received.

c) Check to see if there is any LED activity.

Brother print servers have two LEDs on the back panel of the printer. The upper side LED shows Link shows Link/Speed status. The lower side LED shows Activity (Receive/Transmit) status.

- No light:

  If the both of two LEDs are off, then the print server is not connected to the network.

- Link/Speed LED is orange: Fast Ethernet

  The Link/Speed LED will be orange if the print server is connected to a 100Base TX Fast Ethernet network.

- Link/Speed LED is green: 10BaseT Ethernet

  The Link/Speed LED will blink if the print server is receiving or transmitting data.

(4) If you are using a repeater or hub, make sure that SQE (heartbeat) is turned off at the hub (if applicable). Also, if you have a hub or multi-port repeater, verify that the hub or repeater port is good by trying the print server on a different port or on the other hub or multi-port repeater.

(5) If you have a bridge or router located between the print server and host computer, make sure that the device is set up to allow the print server to send and receive data from the host. For example, a bridge can be set up to only allow certain types of Ethernet addresses to pass through (a process known as filtering); therefore, such a bridge must be configured to allow Brother print server addresses. Likewise, a router can be set up to pass only certain protocols, so be sure that the desired protocol can be passed through to the print server.

(6) If the job exits the queue but does not print, make sure that you are not trying to print a text job to a PostScript printer. If you have a printer that is capable of automatic language switching, make sure that the printer is not forced into PostScript mode.

8.2 Intermittent Problem

If the print server and printer start up OK, but you intermittently have problems printing, check the following:

(1) If you can print small jobs but large graphics jobs are distorted or incomplete, make sure that you have adequate memory in your printer and the latest printer driver installed on your computer. The latest Brother printer drivers can be downloaded from http://solutions.brother.com

(2) Check the individual protocol troubleshooting sections in this chapter for additional causes of intermittent printer problems.

8.3 TCP/IP Troubleshooting

If you are using TCP/IP and cannot print to the print server and you have checked the hardware and network as described in the previous steps, then check the following:

NOTE:

It is always a good idea to try the following in order to eliminate the possibility of setup errors.

- *Turn off the printer and then on again,*
- *Delete and recreate the print server and create a new print queue in order to eliminate the possibility of setup errors.*

(1) The problem may be the result of mismatched or duplicate IP address. Verify that the IP address is correctly loaded into the print server (via the configuration page). Make sure that no other nodes on the network have this address (DUPLICATE IP ADDRESS ARE THE BIGGEST CAUSE OF TCP/IP PRINTING PROBLEMS).

(2) If you used BRCONFIG or NCP to enter the IP address, make sure that you exited the remote console properly with a CTRL-D or EXIT and that you turned the printer off and then on again (it may take up to two minutes for the IP address to take effect).

(3) Make sure that the TCP/IP protocol of the print server is enabled.

(4) If you used rarp, make sure that you started the rarp daemon on any workstation using the rarpd, rarpd-a, or equivalent command. Verify that the /etc/ethers file contains the correct Ethernet address and that the print server name matches the name in the /etc/hosts file.

(5) If you used bootp, make sure that you started the bootp daemon on any UNIX workstation and bootp is enabled (i.e., the “#” is removed from the bootp entry) in the /etc/bootptab file is correctly configured.

(6) Also verify that host computer and the print server are either on the same subnet, otherwise that the router is properly configured to pass data between the two devices.

8.4 UNIX Troubleshooting

(1) Make sure that the /etc/printcap file (if applicable) is typed in correctly. In particular, look for missing ":" and "\" characters, because a small error *anywhere* in the file can have *major* consequences. Also check the /usr/spool directory to make sure that you have created a valid spool directory.

(2) If you are using a Linux operating system, the X-Window Print tool program that is included with Linux may not properly configure the etc/printcap file for lpd operation, then you might also edit the etc/printcap file and change the following line in the entry for the printer.

```
if
:lp = /dev/null: \

then to
:lp = :\
```

(3) If you are using a Berkeley-based UNIX, make sure that the daemon is started on Berkeley based systems with the command lpc start *printer*, where *printer* is the name of the local print queue.

(4) If you are using an AT&T-based UNIX, make sure the printer is enabled (enable *printer*, where *printer* is the name of the local print queue).

(5) Make sure that the lpr/lpd remote line printer service are running on the host computer (refer to your host computer documentation for information on how to do this).

(6) If you are having trouble printing more than one job at a time, try increasing the IP timeout using the SET IP TIMEOUT command or using BRAdmin.

(7) If text or PCL jobs are run together, try setting the service (remote printer) with EOT set to string number 2 (<ESC>E). For example:

SET SERVICE BRN_xxxxxx_P1 EOT 2

(8) If PostScript jobs fail to print or are run together, try setting the service (remote printer) with EOT set to string number 3 (control-D). For example:

SET SERVICE BRN_xxxxxx_P1 EOT 3

(9) If the lines of a text file are staggered, make sure that you have specified a remote printer (rp) name of TEXT in your /etc/printcap file.

(10) If you are using Sun Solaris V2.4 or earlier, there is a bug which causes long print jobs to fail when using a print server. If you are having trouble printing long jobs (over 1MB), add the line mx#0 to your etc/printcap file entry.

(11) If you cannot print from DEC TCP/IP Service for VMS (UCX), make sure that you have version 2.0B or later of this software, because earlier versions will not work with Brother print servers.

8.5 Windows NT 4.0/LAN Server (TCP/IP) Troubleshooting

If you are having trouble printing with Windows NT 4.0 or LAN Server, check the following:

(1) Make sure that TCP/IP and TCP/IP print service are installed and running on the Windows NT system or the LAN Server file server.

(2) If you are using DHCP and you have not created a reservation for the print server, make sure that you enter the NetBIOS name of the print server in the Name or address of server providing lpd box.

8.6 Windows 95/98/Me Peer to Peer Print (LPR) Troubleshooting

If you are having trouble printing on a Windows 95/98/Me Peer to Peer network (LPR method), check the following:

(1) Make sure that the Brother LPR Port driver is correctly installed and configured according to the Windows 95/98/Me Peer to Peer chapters in the Network User's Guide.

(2) Try to turn the Byte Count on in the Configure port area of printer driver properties.

You may find that during the installation of BLP software, the screen that prompts you for a Port name is not displayed. This may happen on some Windows 95/98/Me computers. Press the ALT and TAB keys to make it appear.

8.7 Windows 95/98/Me Peer to Peer (HP JetAdmin Compatible Method) Troubleshooting

If you are having trouble printing on a Windows 95/98 Peer to Peer network, check the following (HP JetAdmin compatible method):

(1) If the print server does not show up under JetAdmin on a Windows 95/98 Peer to Peer network, try removing all of the Windows 95/98/Me network software from the Network Control panel and then reinstalling them as follows:

- First install the IPX/SPX-Compatible Protocol (or the TCP/IP protocol if you are using a later version of JetAdmin), the Client for Microsoft Networks, and the network adapter card driver.
- Install the Latest HP JetAdmin software.
- Restart the system, and then add the HP JetAdmin service.

8.8 Windows 95/98/Me/NT 4.0 Peer to Peer Print (NetBIOS) Troubleshooting

If you are having trouble printing on a Windows 95/98/Me/NT 4.0 or later Peer to Peer network (NetBIOS), check the following:

(1) Make sure that the Brother NetBIOS Port driver is securely installed and configured according to the Windows 95/98/Me/NT 4.0 Peer to Peer (NetBIOS) chapters. You may find that during the installation of the port driver, the screen that prompts you for a Port name is not displayed. This happens on some Windows 95/98/Me/NT 4.0 computers. Press the ALT and TAB keys to make it appear.

(2) Make sure that the print server is configured to be in the same workgroup or domain as the test of your computers. It may take several minutes for the print server to appear in the network neighborhood.

8.9 Brother Internet Print (TCP/IP) Troubleshooting

(1) The first step in troubleshooting is to make sure that you have a valid E-mail connection on both the sending PC and the receiving print server. Try sending an E-mail message from the PC to a user at the remote site who can receive mail via the POP3 server. If this does not work, there may be an E-mail configuration problem on the PC, on the local E-mail server, or on the remote POP3 server. Double check to make sure that the E-mail parameters that you configured on the PC and on the remote print server match those that are configured on the E-mail servers.

(2) If you can print small files OK but are having problems printing large files, the problem may be in the e-mail system. Some E-mail systems have difficulties printing large files. If the file does not reach its destination intact, then the problem is with the E-mail system.

(3) You can also enable the partial e-mail print facility on your client PC, this will split the e-mail up into fragments which should then not overwhelm your e-mail server. To do this, select the property dialog of the Brother Internet Print Port.

8.10 Windows 95/98/Me/2000/XP IPP Troubleshooting

Want to use a different Port number other than 631

If you are using Port 631 for IPP printing, you may find that your firewall may not let the print data through. If this is the case, use a different power number (port 80), or configure your Firewall to allow Port 631 data through.

To send a print job using IPP to a printer using Port 80 (the standard HTTP port) enter the following when configuring your Windows 2000/XP system.

`http://ip_address/ipp`

Get More Info option in Windows 2000 not working

If you are using a URL of:

`http://ip_address:631` or `http://ip_address:631/ipp`, the **Get More Info** option in Windows 2000 will not function. If you wish to use the **Get More Info** option, use the following URL:

`http://ip_address`

This will then force Windows 2000/XP to use Port 80 to communicate with the Brother print server.

Windows 95/98/Me clients not able to get the driver from a Windows 2000/XP system.

You must be using version 4.0 or later of Internet Explorer and the **Microsoft Internet Print Services** software must be installed on your client computers.

8.11 Novell Netware Troubleshooting

If you cannot print from NetWare and you have checked the hardware and network as described in the previous steps, first verify that the Brother print server is attached to the server queue by going to PCONSOLE, selecting PRINT QUEUE INFORMATION, and then CURRENTLY ATTACHED SERVERS. If the print server does not appear in the list of attached servers, then check the following:

NOTE:

It is always a good idea to try followings in order to eliminate the possibility of setup errors

- *Turn the printer off and then on again to force the printer to rescan the Netware queue.*
- *Delete and recreate the print server and create a new print queue in order to eliminate the possibility of setup errors.*

(1) If you changed the login password, you must change the password in *both* the Brother print server (using the SET NETWARE PASSWORD command if you are using the BRConfig software) or by using a web browser or the BRAdmin application and in the file server (using the PCONSOLE Print Server Information Change Password command).

(2) If you created the print queue using PCONSOLE and instead of BRAdmin, make sure that you have enabled at least one NetWare file server using the SET NETWARE SERVER *servername* ENABLED command.

(3) Have you exceeded your NetWare user limit?

(4) Make sure that the print server name you used in PCONSOLE *exactly* matches the name that is configured in the print server, and make sure it is defined as a Queue Server for the print queue.

(5) If you are running both 802.3 and Ethernet II frames on different file servers on your network, there is a possibility that the print server may not make a connection to the desired file server. Try forcing the frame type to the desired one using the SET NETWARE FRAME command from the print server remote console or using BRAdmin.

(6) If you are using DOS CAPTURE statement and losing portions of your print job, try setting the TIMEOUT parameter in your CAPTURE statement to a higher value (at least 50 seconds for Windows).

8.12 AppleTalk Troubleshooting

If you cannot print from an AppleTalk for Macintosh computer and you have checked the hardware and network as described in the previous steps, then check the following:

(1) Make sure that you are running Phase 2 AppleTalk and that you have selected the correct network interface from the Apple Talk Control Panel on the Macintosh.

(2) Make sure that the AppleTalk protocol of the print server is enabled.

(3) If you have a large network, make sure that you have the Laser Writer V8.xx or equivalent driver, since earlier versions may cause PostScript errors. Also, verify that you get the correct printer information when you select **Printer Info** from the **Setup** button in the Chooser.

(4) Make sure that you have selected the correct Printer Description File (PPD) from the Chooser (otherwise PostScript errors may result)

(5) Verify that you have selected the correct AppleTalk zone. Because the print server gets its zone information from router broadcasts, it may not be in the zone you expect, and will therefore not show up in the Chooser. If this is the case, you may need to force the zone name using BRAdmin, a web browser or the SET APPLETALK ZONE command from TELNET.

8.13 DLC/LLC Troubleshooting

If you are having trouble printing with DLC/LLC, check the following:

(1) Make sure that the DLC/LLC protocol is enabled using either BRAdmin, a web browser or TELNET.

(2) Make sure that the MAC address of the Windows setting is the same as shown in the printer settings page.

8.14 Web Browser Troubleshooting (TCP/IP)

(1) If you can not connect to the print server using your web browser it may be worth checking the Proxy Settings of your browser. Look in the Exceptions setting and if necessary, type in the IP address of the print server. This will stop your PC from trying to connect to your ISP or proxy server every time you wish to look at the printer server.

(2) Make sure that you are using the proper Web Browser, we recommend Netscape Navigator version 4.0 or later/ Microsoft Internet Explorer version 4.0 or later.

CHAPTER 7 SERVICE SUPPORT SOFTWARE

1. ENTERING HIDDEN FUNCTION MENU MODES

HL-6050/6050D/6050DN has 3 entrances into the hidden function menu;

1. Power on.
   Press the **Go** switch and the **Set** switch (Professional Menu mode).
   See section 2. 'PROFESSIONAL MENU MODE' in this chapter.
2. Power on.
   While holding down the **Go** switch, press the **+** switch once and then the **Set** switch (Service Menu mode). See section 3. 'SERVICE MENU MODE' in this chapter.
3. Power on and press the specified switch(es) and others. See section 4. 'OTHER HIDDEN FUNCTION MENUS' in this chapter.)

2. PROFESSIONAL MENU MODE

The Professional Menu mode enables to customize various functions for specific users and may be opened to users if necessary.

2.1 Enabling and Disabling Professional Menu Mode

Entering the Professional Menu Mode

Turn the machine on.
Press the **Go** switch and **Set** switch together to enter the Professional Menu mode.

Accessing the Required Menu

Use either "**+**" or "**–** " switch to scroll through the menu listing. To select an item, press the "**Set**" switch. Then the sub-menu will appear.
Scroll through the sub menu items using the "**+/–**" switches. To go back to a higher level, select the "exit …" menu in the same level using the "**+/–**" switches.

Inputting a Value or Setting for a Professional Menu Mode

Enter the required mode as explained above. The setting appearing on the display is the current setting.
Select the required setting using the "**+/–**" switches, then press the "**Set**" switch. The previous value remains if the "**Set**" switch is not pressed.

Exiting the Professional Menu Mode

There are three options to exit the Professional Menu mode; either to press "**Go**" switch at any sub menus, to press the "**–**" switch consecutively to go up roots till exiting the Professional Menu mode, or to go down the menu using "**+/–**" switches till the menu "exit MENU" appears, and then press the "**Set**" switch to exit the mode.

2.2 Function Table

The following printer settings and function will be available with this operation.

Title & Subtitle		Item to be Set	Description
TRAY SETTING			
	MANUAL FEED	**PAPER IN=CONT***	Feeds paper automatically when printing using the manual feed function.
		PAPER IN=STOP	Feeds paper by pressing the **Go** switch when printing using the manual feed function.
RESET SETTINGS		**RESET SETTING1**	Selects the “user setting 1” as the current printer setting.
SAVE SETTINGS		**SAVE SETTING1**	Saves the current printer setting as the “user setting 1”.
SAVE FONT			This menu is effective when CompactFlash is installed in LaserJet emulation.
	PRIMARY FONT	**SET ID=####**	Saves the current primary fonts in LaserJet emulation into the storage devices; CompactFlash.
	SECONDARY FONT	**SET ID=####**	Saves the current secondary fonts in LaserJet emulation into the storage devices; CompactFlash.
	DOWNLOAD FONT	**DOWNLOAD=####**	Saves the downloaded fonts in LaserJet emulation into the storage devices; CompactFlash.
SAVE MACRO		**SET ID=####**	Saves the macro in LaserJet emulation into the storage devices; CompactFlash. This menu is effective when CompactFlash is installed and macro is effective in LaserJet emulation.
SPOOL PRINT		**COLLATE=ON***	Enables and disables collating function when re-printing; secure print, proof print or public print
		COLLATE=OFF	
TRAYCOMMAND MODE		**TRAY COM.=NORM.***	HP LaserJet 4 compatible.
		TRAY COM.=SPEC.	HP LaserJet 3 compatible.

Title & Subtitle		Item to be Set	Description
READOUT SELECT		**READOUT=ON**	When receiving DC3 in FX emulation, ignores the data received before DC1.
		READOUT=OFF*	Not ignore the data even DC3 is received.
FONT SELECT			
	SCALABLE FONT This menu is effective when CompactFlash is installed in LaserJet emulation	**FONT=ALL***	Enables all scalable fonts when selecting PCL font setting.
		FONT=LJ4	Disables the fonts below when selecting PCL font setting. *Atlanta, Bermuda Script, PC Brussels, Copenhagen, Germany, Portugal, Calgary, San Diego, US Roman*
	FONT SELECT	**PRIMARY FONT**	Selects primary fonts in LaserJet emulation.
		SECONDARY FONT	Selects secondary fonts in LaserJet emulation.
	IBM CHR SET MODE	**IBM E1H=Esszet***	Places “Esszet” on E1h of IBM character set.
		IBM E1H=Beta	Places “Beta” on E1h of IBM character set.
	W BOLD ON/OFF	**W BOLD=OFF***	ON: Makes a reprinted character bold. (Print speed would get slow.)
		W BOLD=ON	
	DLFNT Bd/It	**DLFNT Bd/It=NO***	YES: Creates bold and italic font from download fonts.
		DLFNT Bd/It=YES	
	B PROD ON/OFF	**B PROD=ON***	ON: Creates bold and italic font from bitmap fonts.
		B PROD=OFF	
	CONDENCE SELECT	**CONDENC=16.66p***	Selects the pitch for EPSON / IBM condensed characters.
		CONDENC=17.14p	
	OEM FONT SELECT	**OEMFONT=DISABLE***	Enables and disables to select European Parliament fonts.
		OEMFONT=ENABLE	
	DARKFONT SELECT	**DARKFONT=DISABLE***	Enables and disables to select bold brougham.
		DARKFONT=ENABLE	
	BRO FONT SELECT	**BROBITM=DISABLE***	Enables and disable the built-in 10/12 pitch Brougham bitmap font.
		BROBITM=ENABLE	
	ISR FONT SELECT	**ISRFONT=DISABLE***	Enables and disables to select Hebrew font.
		ISRFONT=ENABLE	

Title & Subtitle		Item to be Set	Description
FONT SELECT			
	300DPI PRIORITY	**3B PRIO=LOW***	The priority of selection for 300dpi bitmap fonts is standard (=low).
		3B PRIO=HIGH	The priority of selection for 300dpi bitmap fonts is higher than scalable font. The compatibility of font selection manner with HP LaserJet 4 is not maintained if you choose 3B PRIO=HIGH.
	FX/XL SCALE FONT	**SCAL.F=NORMAL***	Only similar size fonts are selectable as scalable is selected.
	(EPSON/IBM Emulation mode)	**SCAL.F=ALL SIZE**	All fonts are selectable.
	FX/XL SCALE ITA.	**ITA=OBLIQUE***	Makes upright font oblique to have italic as scalable font is selected.
	(Epson/IBM Emulation mode)	**ITA=ITALIC SEL**	Uses the upright font to have italic as scalable font is selected.
PAPER&TRAY SIZE		**DEF PAPER=A4***	Printers to be shipped to the other area than USA, Canada, Mexico, and Chile have the A4 size setting by default.
		DEF PAPER=LT	Printers to be shipped to USA, Canada Mexico and Chile have the Letter size setting by default.
PARALLEL MENU			
	STB/ACK DELAY	**CDCC BSSL=L***	ACK signal is sent out before BUSY signal goes down. This is chosen by default.
		CDCC BSSL=H	ACK signal is sent out when BUSY signal goes down.
REPRINT ON/OFF		**REPRINT=ON***	Follows the user menu's setting which selects either enabling or disabling reprint function.
		REPRINT=OFF	Disables reprint function.
AUTO HRC ON/OFF		**AUTO HRC=OFF***	Enables and disables automatic HRC control.
		AUTO HRC=ON	
APPLETALK AT/PS		**APPLE TALK=PS***	Switches the emulation to the PS mode when AppleTalk receives data.
		APPLE TALK=AUTO	The auto emulation function switches emulations.

Title & Subtitle	Item to be Set	Description
PS BINARY SELECT	**PS BINARY=ASCII***	Handle the data as ASCII. Ctrl-T, Ctrl-C etc. are handled as the control codes. This is chosen by default.
	PS BINARY=BIN	Binary data can be printed. Ctrl-T, Ctrl-C etc. does not work.
PS QUOTE BINARY	**PS QUOTEBIN=OFF***	Not accept the binary data even with special codes.
	PS QUOTEBIN=ON	Accepts the binary data with special codes.
PS IMAGE MASK	**PS IMAGEMSK=OFF***	ON: Makes print speed faster with an OS/2 driver.
	PS IMAGEMSK=ON	
PS CELL MODE	**PS CEIL=FLOOR***	Modulates calculation diffusion of PostScript.
	PS CEIL=CEIL	
PS STATUS ECHO	**STATUS ECHO=ON***	Enables and disables PS calculation.
	STATUS ECHO=OFF	
PROTECT OFF MODE	**PRO.OFF=AUTO***	Carries out the page protect if it is turned OFF.
	PRO.OFF=NORMAL	Carries out the page protect.
HP ESC E COMMAND	**HP ESC E=RESET***	Reset a printer with ESC E.
	HP ESC E=F/F	Carries out form feed with ESC E.
PS300RESO	**PS300RESO=NO***	Does not reduce the resolution automatically.
	PS300RESO=IF 2M	Reduces the resolution to 300dpi when the total memory is 2Mbytes.
	PS300RESO=FORCE	Reduces the resolution to 300dpi.
COPY PAGES	**COPY PAGES=ON***	OFF: 1 page is fixed for the copy page number.
	COPY PAGES=OFF	

Title & Subtitle	Item to be Set	Description
JOB TIMEOUT SEL	**TIMEOUT=ON***	PJL JOB TIMEOUT is effective.
	TIMEOUT=OFF	PJL JOB TIMEOUT does not carry out.
DEMO PAGE ON/OFF	**DEMO PAGE=ON***	Adds and removes “DEMO PAGE” into the user menu.
	DEMO PAGE=OFF	
PICKUP RETRY SET	**PICKUP RETRY=2***	Set number of re-trying of paper feeding. The number can be selected in the range from 0 to 7. 2 is chosen by default.
JOB CANCEL TIME	**TIME OUT=???sec**	Selects time (1 to 255 seconds) “job cancel” job becomes time out
PSCOPYPAGE	**PSCOPYPAGE=L3***	L2: Changes the PS copypage operator from Level3 to Level2.
	PSCOPYPAGE=L2	
1JOB1PAGE SEL	**1JOB1PAGE=SX***	Duplex=ON makes the printing speed of 1 page of data faster.
	1JOB1PAGE=DX	Sets up the printing mode. (Simplex/Duplex)
APPLEUSBPS	**BINARY=OFF***	Enables to print PS Pure Binary data via Mac USB.
	BINAY=ON	
MP CAS ADJUST	**MPTRAY YADJUST**	Adjusts the position of starting scanning in each paper tray.
	PCTRAY YADJUST	-100 to100 dot (300dpi)
	DUPLEX YADJUST	
	MPTRAY XADJUST	Adjusts the position of starting scanning in each paper tray.
	TRAY1 XADJUST	-100 to 750 dot (300dpi)
	TRAY2 XADJUST	
	DUPLEX XADJUST	
NET HEAP SIZE	**HEAPSIZE=xxxxK**	Changes the size of Heap size area used in BR-Net. (K byte)
PS FONT CACHE	**CLEAR CACHE=OFF***	ON: Clears the Font Cache when the Job is complete.
	CLEAR CACHE=ON	
POWER SAVE	**POWER SAVE=ON***	Enables and disables power save function.
	POWER SAVE=OFF	
TONER LOW LEVEL	**LOWLEVEL=DEFAULT***	Toner check duty level: 2%
	LOWLEVEL=SLOW1	Toner check duty level: 8%
	LOWLEVEL=SLOW2	Toner check duty level: 12%
	LOWLEVEL=NOTHING	Does not show “TONER LOW”.

3. SERVICE MENU MODE

By enabling the Service Menu mode provides, you will get various printer information. This mode is not open to users.

3.1 Entering the Service Menu Mode

Turn the machine on.

While holding down the **Go** switch, press the **+** switch once and then the **Set** switch.

3.2 Function Table

The following information will be available with this operation.

Title	Subtitle	Description
SERVICE INFO	**PAGE COUNT**	Displays the number of printing pages.
	JAM COUNT **JAM MP TRAY** **JAM TRAY1** **JAM TRAY2** **JAM INSIDE** **JAM REAR** **JAM DUPLEX**	Displays the number of jam occurrence.
	REPLACE COUNT	
	TONER	Displays the number of the toner cartridge unit replacement.
	DRUM UNIT	Displays the number of the drum unit replacement.
	PF KIT MP	Displays the number of the PF kit replacement. PF kit MP/1/2= PF kit for MP Tray/Tray 1/Tray 2.
	PF KIT 1	
	PF KIT 2	
	FUSER UNIT	Displays the number of the fuser unit replacement.
	LASER UNIT	Displays the number of the laser unit replacement.
	COVERAGE	Displays the average coverage (when printing Letter size paper at 100% print coverage). COVERAGE counter will be effective until the page counter counts up to 100,000 pages.

Title	Subtitle	Description
SERVICE INFO	**PRINT PAGES**	Displays the number of pages when printing each paper size. PRINT PAGES counter will be effective until it counts up to 100,000 pages for each paper size. ENVELOPE: C5, COM10, DL/ MONARCH OTHER PAGE: User defined size, MP Tray size=ANY
	A4/LTR PAGE	
	LGL/A4LONG PAGE	
	B5/EXE PAGE	
	ENVELOPE PAGE	
	OTHER PAGE	
ERROR HISTORY	**1:#######** **2:#######** **3:#######** **……** **10:#######**	Displays the 10 latest errors in order of newest to the oldest. *NOTE: "COVER OPEN" and "NVRAM ERROR" are not displayed in the history.* *If an error occurs consecutively, it will be displayed only once.*
LIFE PERIOD	**DRUM UNIT**	Displays the drum unit life period.
	PF KIT	Displays the PF kit life period.
	FUSER UNIT	Displays the fixing unit life period.
	LASER UNIT	Displays the laser unit life period.
	DEVELOPER	Displays the Developer life period.
DEVELOPER	**ON*/OFF**	Not used.
DRUM LIFE CHK %		Sets up the timing of showing "CHANGE DRUM SOON" message. Default setting: 90%

Title	Subtitle	Description
MODIFY COUNT	**JAM COUNT**	Displays the total number of paper jam occurrence. (JAM MP TRAY + JAM TRAY 1 + …… + JAM DUPLEX)
	JAM MP TRAY **JAM TRAY1** **JAM TRAY2** **JAM INSIDE** **JAM REAR** **JAM DUPLEX**	The number of paper jam occurrence can be changed only to 0. (Reset only)
	DEVELOPER	Displays the number of the Developer turning.
	REPLACE COUNT	
	TONER	Displays the number of the toner cartridge replacement.
	DRUM UNIT	Displays the number of the drum unit replacement.
	PF KITMP	Displays the number of the PF kit replacement. PF kit MP/1/2= PF kit for MP Tray/Tray 1/Tray 2.
	PF KIT 1	
	PF KIT 2	
	FUSER UNIT	Displays the number of the fixing unit replacement.
	LASER UNIT	Displays the number of the laser unit replacement.
	REMAIN LIFE	
	DRUM UNIT	Displays the drum unit remaining life counters. (page)
	DRUM UNIT2	Displays the drum unit remaining life counters. (rotation)
	PF KIT MP	Displays the PF kit remaining life counters. PF kit MP/1/2= PF kit for MP Tray/Tray 1/Tray 2.
	PF KIT 1	
	PF KIT 2	
	FUSER UNIT	Displays the fixing unit remaining life counters.
	LASER UNIT	Displays the laser unit remaining life counters.
RESET COUNT	**CLEAR COVERAGE**	Initialize average coverage counter.
	CLEAR ERROR HIST	Initialize error history.
NV-RAM DEBUG	**NV-RAM HEX PRINT**	Prints NV-RAM HEX dump.

Title	Subtitle	Description
SCANNER UNIT	**START TUNING**	Carries out the automatic correction of twin laser. *This operation needs to be carried out after replacing the laser unit and the main PCB.
PPDS SUBSET	**ON/OFF**	SUPPORTS the PPDS Subset command in the FX Emulation mode.
TEST MENU	**FAN TEST**	Carries out movement test of FANs.
	FAN 1=ON/OFF*	Carries out movement test of main fan.
	FAN 2=ON/OFF*	Carries out movement test of LVPS fan.
	FAN 3=ON/OFF*	Carries out movement test of scanner fan.
	MOTOR TEST	Carries out movement test of MOTORs.
	MAIN MOTOR=ON/OFF*	
	SCAN MOTOR=ON/OFF*	
	SENSOR TEST	Carries out movement test of SENSORs.
	REGI-MAE=ON/OFF	Regist front sensor
	EJECT=ON/OFF	
	MP PAPER=ON/OFF	
	T1 PAPER=ON/OFF	
	T2 PAPER=ON/OFF	
	REGI-ATO=ON/OFF	Regist rear sensor
	T2 REGI=ON/OFF	
	REAR COVER=ON/OFF	ON: OPEN
	DX LEVER=ON/OFF	ON: A4
	DX UNIT=ON/OFF	ON: OPEN
BUZZER	**=OFF**	OFF: Sets the buzzer function to “OFF” compulsory.
	=ON*	

Title	Subtitle	Description
MAINTENANCE PRINT		Prints the maintenance information. (The contents are the same as the second page of Print Settings.) <Developing Bias: xxx V> is added to an end. xxx: The counter of the developer unit is 0 = 500V The counter of the developer unit is 7500 = 400V The counter of the developer unit is more than 7500 = 400V *There is a bug if the value is other than 400V to 500V.

4. OTHER HIDDEN FUNCTION MENUS

4.1 Hidden Function Menus Enabled by Pressing Switch(es) When Turning the Machine on

The following settings and function will be available by holding down the specified switch(es) while turning the machine on.

Switch(es)	Display	Description
Go	**DEMO MODE=OFF*** **DEMO MODE=ON**	Enables and disables DEMO MODE. If this function is ON (default setting), the user can set a printer to work as a demo machine. It turns OFF automatically when the printing data is sent to the printer.
Reprint		Continuously print the test pattern sheet.
–	**HEX DUMP MODE**	Hex dump mode. Printer reset is needed to exit this function. You can print data as hexadecimal code.
+		Version check
Set		Clears NVRAM. **This function is not normally used.**
Set & Back		Rewrites the data on the ROM.
Go & +	**DRAM CHECK START**	Checks DRAM.
Go & Back		Printer starts by skipping the following functions: 1) Rewriting the data on the Flash Rom by using the CompactFlash Card 2) Clearing the NVRAM by using the CompactFlash Card
– & +	**LINE TEST** **LT MX DX**	Printer test mode. **DO NOT USE.**
– & Set	**HIGHVOLT CHECKER**	Checks the high-voltage power supply. **DO NOT USE.**
Go & Set	**GO TEST MODE**	Cancellation of E50 (FUSER MULF)

4.2 Parts Life Reset Function

This function is used by service specialists only when changing the periodical replacement parts to clear the life counter.

To operate this function, press the "**Go**" and "**+**" switches together until the menu "RESET PARTS LIFE" appears on the LCD display. Select the required item (part name) using the "**+/–** " switches, then press the "**Set**" switch. See subsection 2 'PERIODICAL REPLACEMENT PARTS' in CHAPTER 5 for more information about the periodical replacement parts.

Title	Subtitle	Description
RESET PARTS LIFE	**DRUM UNIT**	Initializes the counter of the drum unit to zero.
	PF KITMP	Initializes the counter of the paper feeding kit to zero. PF kit MP/1/2= PF kit for MP Tray/Tray 1/Tray 2.
	PF KIT1	
	PF KIT2	
	FUSER UNIT	Initializes the counter of the fixing unit to zero.
	LASER UNIT	Initializes the counter of the laser unit to zero.
	DEVELOPER	Initializes the counter of the developer unit to zero.

5. PRINT SETTINGS

If you want to know the drum unit life or the number of printed pages, you should print out the Print Settings.

5.1 Printing out the Print Settings

(1) Press the **Set** switch three times.

(2) Print the Print Settings.

NOTE:

The descriptions printed in Print Configuration vary depending on the countries.

<Sample - for Europe>

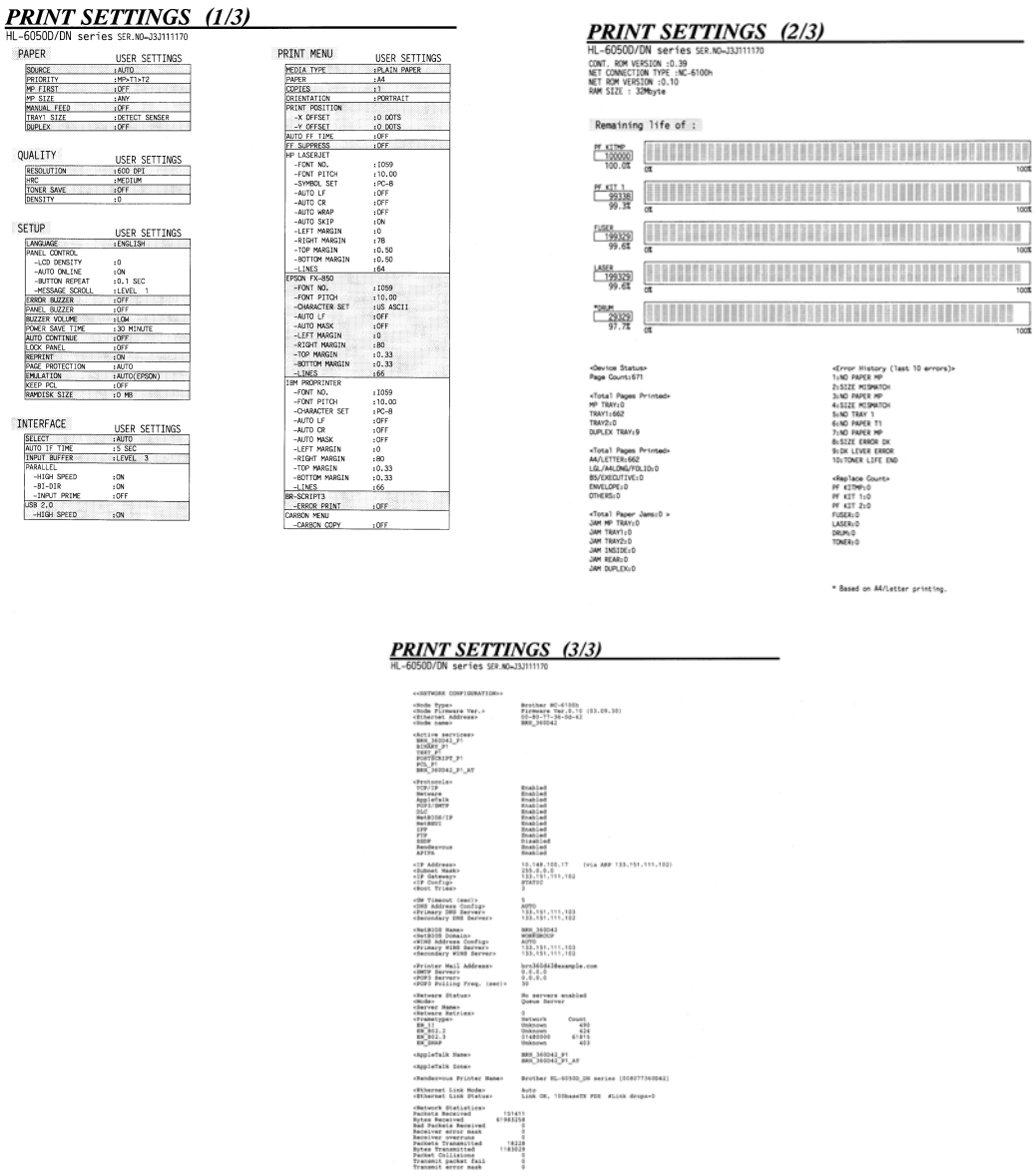

PRINT SETTINGS (1/3)

HL-6050D/DN series SER.NO=J3J111170

PAPER	USER SETTINGS
SOURCE	:AUTO
PRIORITY	:MP>T1>T2
MP FIRST	:OFF
MP SIZE	:ANY
MANUAL FEED	:OFF
TRAY1 SIZE	:DETECT SENSER
DUPLEX	:OFF

QUALITY	USER SETTINGS
RESOLUTION	:600 DPI
HRC	:MEDIUM
TONER SAVE	:OFF
DENSITY	:0

SETUP	USER SETTINGS
LANGUAGE	:ENGLISH
PANEL CONTROL	
-LCD DENSITY	:0
-AUTO ONLINE	:ON
-BUTTON REPEAT	:0.1 SEC
-MESSAGE SCROLL	:LEVEL 1
ERROR BUZZER	:OFF
PANEL BUZZER	:OFF
BUZZER VOLUME	:LOW
POWER SAVE TIME	:30 MINUTE
AUTO CONTINUE	:OFF
LOCK PANEL	:OFF
REPRINT	:ON
PAGE PROTECTION	:AUTO
EMULATION	:AUTO(EPSON)
KEEP PCL	:OFF
RAMDISK SIZE	:0 MB

INTERFACE	USER SETTINGS
SELECT	:AUTO
AUTO IF TIME	:5 SEC
INPUT BUFFER	:LEVEL 3
PARALLEL	
-HIGH SPEED	:ON
-BI-DIR	:ON
-INPUT PRIME	:OFF
USB 2.0	
-HIGH SPEED	:ON

PRINT MENU	USER SETTINGS
MEDIA TYPE	:PLAIN PAPER
PAPER	:A4
COPIES	:1
ORIENTATION	:PORTRAIT
PRINT POSITION	
-X OFFSET	:0 DOTS
-Y OFFSET	:0 DOTS
AUTO FF TIME	:OFF
FF SUPPRESS	:OFF
HP LASERJET	
-FONT NO.	:1059
-FONT PITCH	:10.00
-SYMBOL SET	:PC-8
-AUTO LF	:OFF
-AUTO CR	:OFF
-AUTO WRAP	:OFF
-AUTO SKIP	:ON
-LEFT MARGIN	:0
-RIGHT MARGIN	:78
-TOP MARGIN	:0.50
-BOTTOM MARGIN	:0.50
-LINES	:64
EPSON FX-850	
-FONT NO.	:1059
-FONT PITCH	:10.00
-CHARACTER SET	:US ASCII
-AUTO LF	:OFF
-AUTO MASK	:OFF
-LEFT MARGIN	:0
-RIGHT MARGIN	:80
-TOP MARGIN	:0.33
-BOTTOM MARGIN	:0.33
-LINES	:66
IBM PROPRINTER	
-FONT NO.	:1059
-FONT PITCH	:10.00
-CHARACTER SET	:PC-8
-AUTO LF	:OFF
-AUTO CR	:OFF
-AUTO MASK	:OFF
-LEFT MARGIN	:0
-RIGHT MARGIN	:80
-TOP MARGIN	:0.33
-BOTTOM MARGIN	:0.33
-LINES	:66
BR-SCRIPT3	
-ERROR PRINT	:OFF
CARBON MENU	
-CARBON COPY	:OFF

PRINT SETTINGS (2/3)

HL-6050D/DN series SER.NO=J3J111170

CONT. ROM VERSION :0.39
NET CONNECTION TYPE :NC-6100h
NET ROM VERSION :0.10
RAM SIZE : 32Mbyte

Remaining life of :

PF KIT MP	120000	100.0%
PF KIT 1	99338	99.3%
FUSER	199329	99.6%
LASER	199329	99.6%
*DRUM	29329	97.7%

<Device Status>
Page Count:671

<Total Pages Printed>
MP TRAY:0
TRAY1:662
TRAY2:0
DUPLEX TRAY:9

<Total Pages Printed>
A4/LETTER:662
LGL/A4LONG/FOLIO:0
B5/EXECUTIVE:0
ENVELOPE:0
OTHERS:0

<Total Paper Jams:0 >
JAM MP TRAY:0
JAM TRAY1:0
JAM TRAY2:0
JAM INSIDE:0
JAM REAR:0
JAM DUPLEX:0

<Error History (last 10 errors)>
1:NO PAPER MP
2:SIZE MISMATCH
3:NO PAPER MP
4:SIZE MISMATCH
5:NO TRAY 1
6:NO PAPER T1
7:NO PAPER MP
8:SIZE ERROR DX
9:DX LEVER ERROR
10:TONER LIFE END

<Replace Count>
PF KITMP:0
PF KIT 1:0
PF KIT 2:0
FUSER:0
LASER:0
DRUM:0
TONER:0

* Based on A4/Letter printing.

PRINT SETTINGS (3/3)

HL-6050D/DN series SER.NO=J3J111170

<<NETWORK CONFIGURATION>>

<Node Type>	Brother NC-6100h
<Node Firmware Ver.>	Firmware Ver.0.10 (03.09.30)
<Ethernet Address>	00-80-77-36-0D-42
<Node name>	BRN_360D42
<Active services>	
BRN_360D42_P1	
BINARY_P1	
TEXT_P1	
POSTSCRIPT_P1	
BRCONFIG	
BRN_360D42_P1_AT	
<Protocols>	
TCP/IP	Enabled
Netware	Enabled
AppleTalk	Enabled
TCP/IP SMTP	Enabled
DLC	Enabled
NetBIOS/IP	Enabled
NetBEUI	Enabled
IPP	Enabled
LPD	Enabled
SNMP	Disabled
Rendezvous	Enabled
APIPA	Enabled
<IP Address>	10.148.100.17 (via ARP 133.151.111.102)
<Subnet Mask>	255.0.0.0
<IP Gateway>	133.151.111.102
<IP Setup>	STATIC
<Boot Time>	3
<DN Timeout (sec)>	5
<DNS Address Config>	AUTO
<Primary DNS Server>	133.151.111.103
<Secondary DNS Server>	133.151.111.102
<NetBIOS Name>	BRN_360D42
<NetBIOS Domain>	WORKGROUP
<WINS Address Config>	AUTO
<Primary WINS Server>	133.151.111.103
<Secondary WINS Server>	133.151.111.102
<Printer Mail Address>	brn360d42@example.com
<SMTP Server>	0.0.0.0
<POP3 Server>	0.0.0.0
<POP3 Polling Freq. (sec)>	30
<Netware Status>	No servers enabled
<Mode>	Queue Server
<Server Name>	
<Netware Retries>	0
<Frametype>	Network Count
EN_II	Unknown 490
EN_802.2	Unknown 424
EN_802.3	01480000 61815
EN_SNAP	Unknown 403
<AppleTalk Name>	BRN_360D42_P1
	BRN_360D42_P1_AT
<AppleTalk Zone>	
<Rendezvous Printer Name>	Brother HL-6050D_DN series [008077360D42]
<Ethernet Link Mode>	Auto
<Ethernet Link Status>	Link OK, 100BaseTX FDX #Link drops=0
<Network Statistics>	
Packets Received	151411
Bytes Received	67993258
Bad Packets Received	0
Receiver error mask	0
Receiver overruns	0
Packets Transmitted	18228
Bytes Transmitted	1183029
Transmit collisions	0
Transmit packet fail	0
Transmit error mask	0

Fig. 7- 1

5.2 Contents Overview

The Print Settings, configured with two pages, is for both PCL and PS. However, page 3 is added when BR-Net is equipped.

All pages have following terms in common:

*Title

*Model name

*Serial number

The setting indication is the same as the panel setting information, supporting 10 languages.

(ENG / FRE/ GER / DUT / ITA / SPA / NOR / SWE / DAN / POR)

5.2.1 Page 1

This page includes various setting information of the printer.

5.2.2 Page 2

This page includes the printer and maintenance information in the following order.

<1> Printer information

The following terms are indicated in the order.

- Controller version (CONT. ROM VERSION)
- Equipped network type (NC-6100h/NC-7100w)

However, if there is no network, nothing will be displayed. Also, “CONNECTED” will be displayed when the information is not retrieved.

- Equipped network version (NET ROM VERSION)

However, if there is no network, nothing will be displayed. Also, it displays nothing when the information is not retrieved.

- RAM SIZE (Mbyte)
- Device information (RAMDISK/CF: Displayed only when it is set. CF is displayed when both are set.)

<2> Maintenance information

(1) Consumable parts information

The printable pages remained for each consumable part is indicated. Also, the percentage of life remained over the total printable pages is indicated in numerical value and band graph.

A sample (PF KIT MP) is as follows:

From the top left, the consumable part name, number of printable pages remained, and percentage of life remained are indicated. The right column is a band graph separated into 50 scale marks.

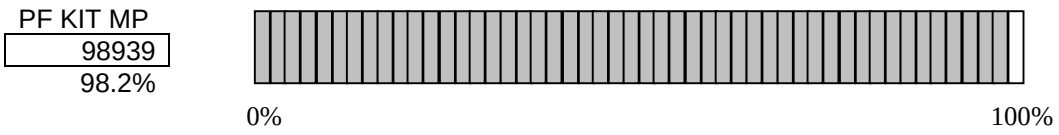

The consumable parts indicated are as follows:

- PF KIT MP
- PF KIT 1
- PF KIT 2 (Displayed only when the TRAY2 is equipped.)
- FUSER
- LASER
- DRUM

NOTE:

Refer to "APPENDIX14. HOW TO CALCULATE THE DRUM UNIT LIFE" to know how to calculate the drum unit life.

(2) Counter information, history information

The counter and history information related to the following term is included. When it reaches the maximum count, each term is no longer counted.

- Page counter

The total number of pages printed. The maximum count is 1 million pages.

- Average coverage (Letter) (Default: OFF)
- The number of each tray used

For Tray 2 and Duplex, it is indicated only when they are equipped. The maximum count for each item is 1 million times.

- The number of each paper used

The number of A4/Letter, A4Long/Legal/Folio, B5/Executine, Envelope, and other paper types used. The maximum count for each item is 1 million times.

- The number of jams occurred in each place

Number of jams occurred in Tray1, Tray2, MP Tray, Inside, Rear, and Duplex (for Tray2 and Duplex, it is indicated only when they are equipped).

- The number of times which consumable parts are replaced

Number of times which the Drum, Toner, PF Kit 1 and 2, MP Tray, Fuser, and Laser are replaced. The maximum count for each item is 65535 times.

- Error history

The latest 10 errors are indicated. However, the cover open error is excluded. The list is updated until 1 million errors. After that, the list is not updated even an error occurs.

- Developing bias (Default: OFF)

5.2.3 Page 3 (HL-6050DN only)

This page includes various network settings information of the printer.

6. HOW TO USE THE SELF-DIAGNOSTICS TOOLS

There are three self-diagnostics tools, which are automatically installed when the printer driver is installed:

1) Troubleshooting for Printer won't print

2) Diagnostics

3) Printer Information

The following sections describe the details on each tool.

6.1 Troubleshooting for Printer won't print

This tool instructs you how to clear the problem such as 'The printer can't print' or 'The printer prints garbage or incorrect fonts'.

(1) When you start the program, the Help dialog box shown below appears.

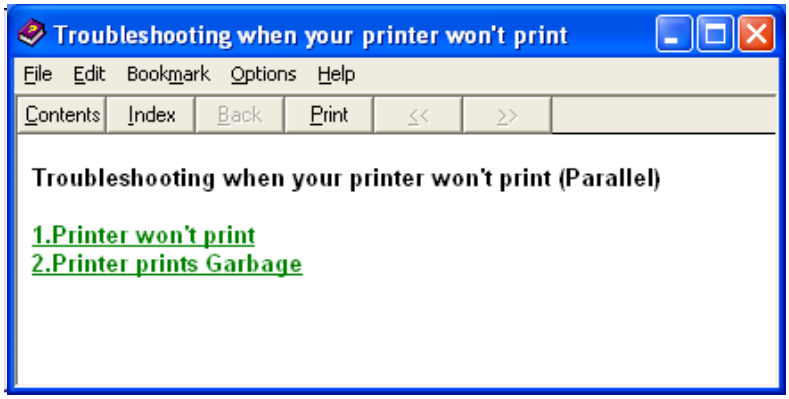

Fig. 7-2

(2) Select the problem you have had, then the specified window appears.

(3) Follow the instructions that appear on the PC screen.

If the problem cannot be solved, start the "Diagnostics" tool to create a log file which should be sent to the authorized service center to investigate the cause of problem. For the details on the "Diagnostics" tool, see the following section, 6.2 'Diagnostics'.

6.2 Diagnostics

This tool helps you to report your PC environment to investigate the cause of problem such as 'Printer won't print' or 'Printer prints garbage or incorrect fonts'. Before using this tool, however, you have to check if you can clear the problem using the 'Troubleshooting for printer won't print' tool described in the previous section.

(1) When you start the program, the dialog box shown below appears. Follow the steps described in the box, then click the **OK** button.

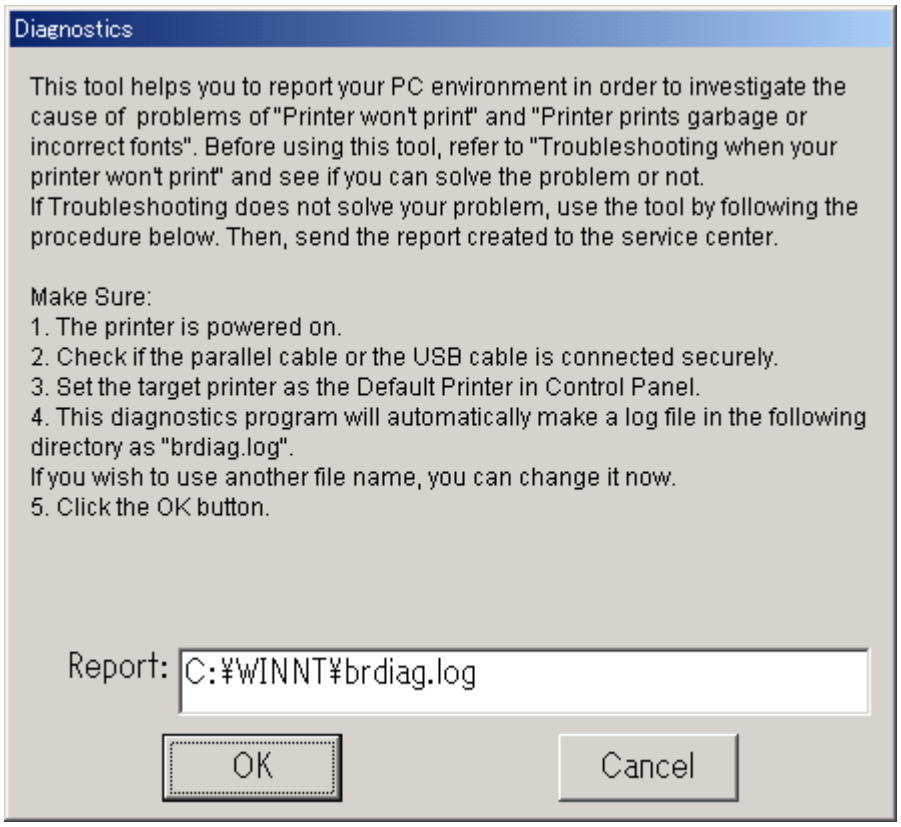

Fig. 7-3

(2) The message below appears, click the **OK** button if you want to check whether there is any incorrect data or not. If you do not want to check it, click the **Cancel** button.

Fig. 7-4

(3) If you click the **OK** button in Step 2, the dialog box below appears.

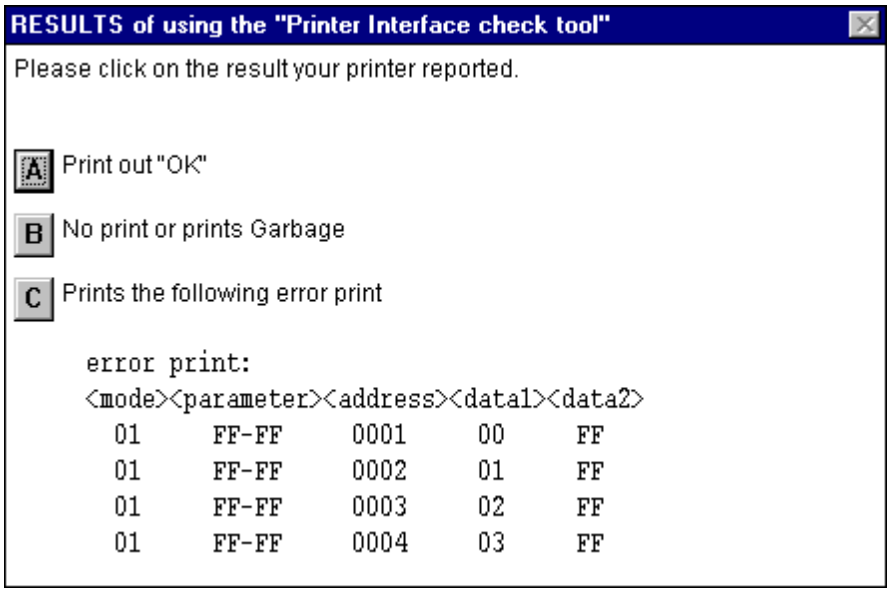

Fig. 7-5

(4) Check the result that the printer reported and click the **A**, **B** or **C** button depending on the result.

(5) The created log file is shown on the PC screen. (The software will ask whether you wish to print the log file or not.)

Send the log file created with this tool to investigate the problem to the authorized service center.

6.3 Printer Information

The drum unit life or page counter is printed on Print Configuration in some countries as described in CHAPTER1 'HOW TO KNOW PAGE COUNTER & PARTS LIFE'.

This tool also shows the printer information such as printer version or page counter for all models only when the printer is connected to a parallel port.

(1) When you start the program, the dialog box shown below appears.

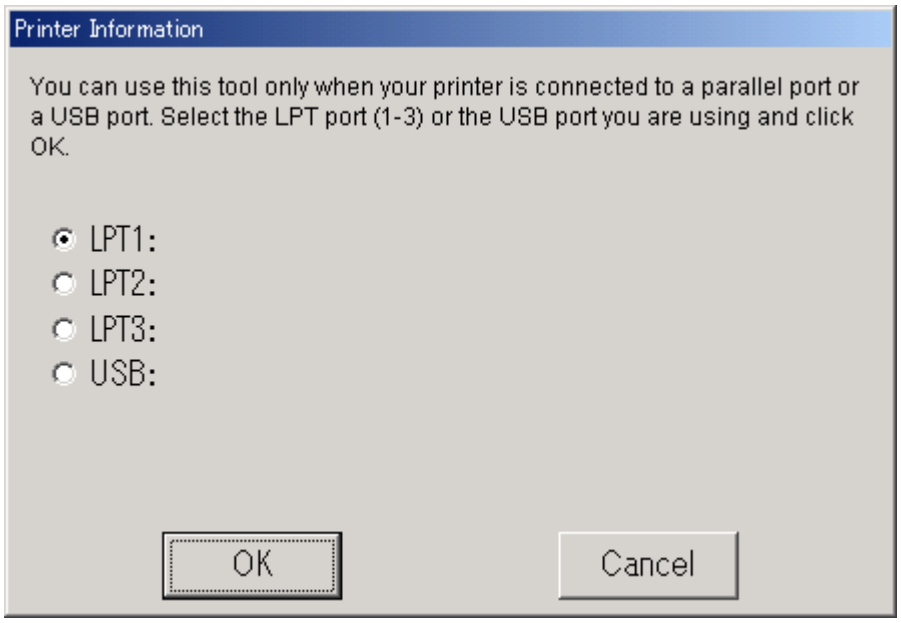

Fig. 7-6

(2) Select the LPT port you are using and click the **OK** button.

(3) The dialog box below appears and indicates from top to bottom, the printer ID, version, fixing unit life, PF kit life, laser unit life and transfer unit life.

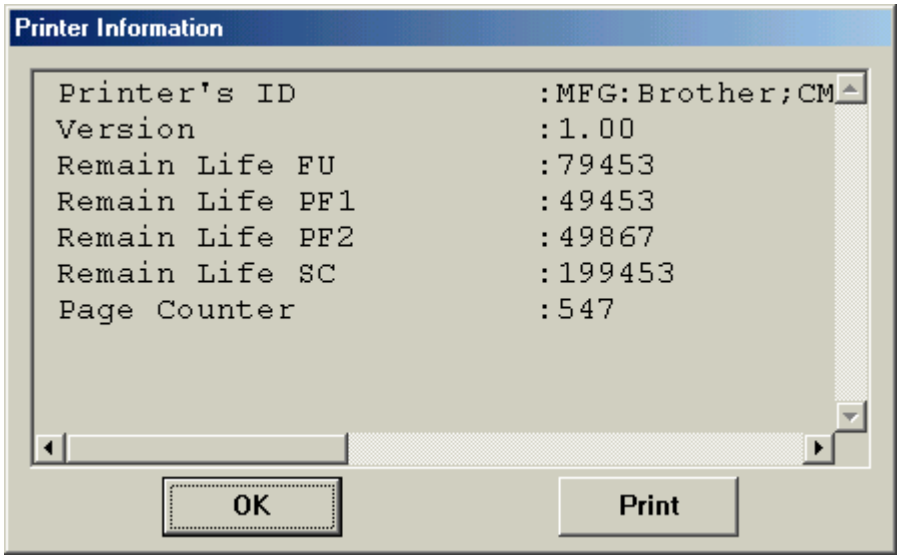

Fig. 7-7

7. NVRAM DEFAULT VALUE

The default values for the main items to be set in NVRAM are as follows;

Items	Descriptions
Timing of Drum LED ON	27,000 page (Counted from the drum unit life.)
Development switching timing	The developing bias is switched from 500V to 400V when 7,500 pages are printed. (Counted from the number of the developer rotation in non-continuous printing)
Fixing temperature	• Transparency: 170°C • Thin paper: 185°C • Recycle paper: 175°C • Plain paper: 180°C (180°C when printing using duplex function) • Thick paper: 195°C • Thicker paper: 195°C • Bond paper: 205°C
Smaller size mode	See 'PRINT SPEEDS WITH VARIOUS SETTINGS' in Chapter 1.

8. HOW TO REWRITE HL-6050/6050D/6050DN FLASH ROM

The ROM composition of each PCB is as follows:

MODEL	Main PCB	
	ROM 0	ROM 1
HL-6050	64 Mbit MASK ROMx1	32 Mbit FLASH ROMx1
HL-6050D/DN	64 Mbit MASK ROMx1	32 Mbit FLASH ROMx1

Working contents

(1) Rewrite a Main firmware. (Main ROM:ROM 1)

(2) Setup by country (PIT3). *This setup is required after replacing the Main PCB.

In case of the inability to use PIT3, refer to "APPENDIX 13. SETUP BY COUNTRY (PJL FILE)" to setup by country with the alternative way.

(3) Rewrite a Network firmware. (NC-6100h, NC-7100w)

Object parts

Model	Part number	Part name	Software part number	Note:
HL-6050	LJ9487002	Main PCB AML	LZ0173001	Main firmware
HL-6050D/DN	LJ9487001	Main PCB AML	LZ0173001	Main firmware

Things to prepare

(1) Computer (Windows® 2000)

Create a folder "AML" in C drive.

(2) HL-6050/6050D/6050DN printer

(3) 1 USB cable

(4) Download utility: FILEDG32.EXE

(5) Tool for setup by country (PIT3): PIT3.EXE

Extract the "PIT3SPFX.EXE" file, then the "PIT3" folder is created in C drive. The setup tool, "PIT3.EXE" is generated in the "PIT3" folder automatically.

(6) Driver for using PIT3: DRV6050.ZIP

(7) Firmware: LZ0173_$.BLF (Main firmware) *1

1

LZ0173_$.BLF	*$ = Indicates the revision of the firmware* *Ex) LZ0173_A.BLF = Main firmware of HL-6050/D/DN (Version A)*

How to rewrite

1. Controller firmware (ROM 1)

(BLF file)

(1) Connect the USB cable to the printer. Turn on the printer while pressing Go and Job Cancel keys. (The USB serial number is fixed to “987654321”.)

The LCD shows [SELF TEST] -> [RAM SIZE = 32MB] -> [Now Initializing] -> [LINETEST MODE] in this order. Keep pressing Go and Job Cancel keys until [LINETEST MODE] appears and release the keys after confirming it.

The LCD shows [WARMING UP] -> [READY] in this order. Wait until [READY] is displayed.

(2) During the step (1), Plug and Play will run to install the USB driver of relevant model.

(3) Double click “FILEDG32”, which is in the “AML” folder. Then, drug and drop the firmware, LZ0173-$.BLF, to the printer icon in FILEDG32.

Data is sent to the printer via the USB cable and firmware rewriting starts. While the data is sent to the printer, DATA LED blinks and when firmware rewriting starts, LED display changes.

Even if transfer command is completed, the data is still transmitted or the rewriting procedure continues. Therefore, be sure NOT to shut down the Windows system, turn the printer off, unplug the cable, or turn the computer off until it reaches to the condition of step (4). Rewriting may be impossible once the writing procedure fails.

(4) After the rewriting finishes, the printer will be rebooted. Wait until Status LED of the printer turns on in green. After rebooting, the copy 2 icon of the printer is created in the printer folder. To avoid unnecessary mistake, delete the icon.

Setup by country (PIT3) *This setup is required after replacing the Main PCB.

(5) Connect the USB cable to the printer. Turn on the printer while pressing Go and Job Cancel keys. (The USB serial number is fixed to “987654321”.)

The LCD shows [SELF TEST] -> [RAM SIZE = 32MB] -> [Now Initializing] -> [LINETEST MODE] in this order. Keep pressing Go and Job Cancel keys until [LINETEST MODE] appears and release the keys after confirming it.

The LCD shows [WARMING UP] -> [READY] in this order. Wait until [READY] is displayed.

(6) Double-click “PIT3.EXE” which is in the “AML” folder.

(7) Input the model name in PIT3 control window, then press Enter key. “CSXXXX”(SCRPTY.YY)” message appears in the model section of PIT3 control window. *2

(8) Input a country code, then press Enter key. *3

EX: If you input “.00101” (USA version), “00101 (USA/USA)” message appears in the specification section of PIT3 control window. Then, “READY” message appears in the PIT3 status window.

(9) Input 9 digits serial number, then press Enter key. PIT3 will start and “RUNNING” message appears in the PIT3 status window.

(10) <When rewriting is completed>

“SER:VVVVVVVVVVVVVVVVVV” message appears in the PIT3 control window and “PASS” message appears in ERR CODE section. Also, “READY” message appears in the PIT3 status window.

<When the error occurs>

The step in which an error occurred is displayed in the PIT3 control window. Also, the error code appears in ERR CODE section and ERROR message appears in the PIT3 status window. To abreact the error, input “check”, then press Enter key.

Perform the step (10) again when an error occurs. If the error message still appears, there should be something wrong with the PCB.

(11) In case of rewriting other printers’ firmware, repeat from the step (1). To finish the procedure, input “quit” in the PIT3 control window, then press Enter key.

(12) Turn the printer off and disconnect the USB cable. Serial number and other settings will be effective when the printer is turned on.

*2

MODEL	Model name to input	Message
HL-6050	/CS6050	CS6050 (SCRPT:Y.YY)
HL-6050D	/CS6050D	CS6050D (SCRPT:Y.YY)
HL-6050DN	/CS6050DN	CS6050DN (SCRPT:Y.YY)

NOTE* ”Y.YY” in the above table indicates the script version.

*3

Code	Country	HL-6050	HL-6050D	HL-6050DN
.00101	USA	x	o	o
.00102	Canada	x	o	o
.00103	Germany	o	o	o
.00104	England	o	o	o
.00106	Australia	o	o	o
.00110	Switzerland	o	o	o
.00112	Finland	o	o	o
.00113	Denmark	o	o	o
.00115	Spain	o	o	o
.00116	Italy	o	o	o
.00117	Israel	o	o	o
.00124	South Africa	o	o	o
.00126	Sweden	o	o	o
.00143	GULF	o	o	o
.00160	France / Belgium / Netherlands	o	o	o

NOTE: ”o” indicates “Supported” and ”x”, “Not supported”.

2. Controller firmware (ROM 1)

(AVA file)

NOTE:
Rewriting firmware by AVA file is prepared for the case rewriting firmware by BLF file failed. Therefore, rewriting firmware by BLF file is recommended unless the above happened. In particular, use AVA file to rewrite firmware when [Get firmware] appears on the LCD when you turn on the printer.

Things to prepare (Addition to the "Things to prepare" of BLF file)

<Hardware-related>

(1) parallel cable

<Software-related>

(2) Firmware : LZ0173_$.AVA (Main firmware) *4

4

LZ0173_$.AVA	*$ = Indicates the revision of the firmware* *Ex) LZ0173_A.BLF = Main firmware of HL-6050/D/DN (Version A)*

Download and extract the necessary firmware from "ROM/Firmware DB", then copy it to the "AML" folder created in C drive.

(1) Install USB drivers for HL-6050 and HL-6050D to the computer to use for rewriting firmware from the enclosed CD. Follow the window procedure to install the targeted printer driver. Specify LPT1 for port. Do not forget to set this printer as the default printer.

(2) Connect the parallel cable to the printer, then turn the printer on while pressing SET and BACK key.
[PRL ->ROM0 W] appears on LCD. Select [PRL ->ROM1 W] with +/ - keys, then press SET key.

Check [Send AVAL file] appears on LCD.

(3) Double click "FILEDG32", which is in the "AML" folder. Right click the icon of the target printer and open "Change port" to check the current port is LPT1. Then, drug and drop the firmware, LZ0173-$.AVA, to the printer icon in FILEDG32.

Data is sent to the printer via the parallel cable and firmware rewriting starts. While the data is sent to the printer, DATA LED blinks and when firmware rewriting starts, LED display changes.

Even if transfer command is completed, the data is still transmitted or the rewriting procedure continues. Therefore, be sure NOT to shut down the Windows system, turn the printer off, unplug the cable, or turn the computer off until it reaches to the condition of step (4). Rewriting may be impossible once the writing procedure fails.

(4) When rewriting finishes, [….Complete….] appears on LCD. Turn OFF and ON the printer after this message appears.

(5) Refer to "Controller firmware (ROM 0)" for setting with PIT3.

3. Controller firmware (ROM 1)

(BIN file)

NOTE:
Rewriting with BIN file does not require connecting the printer to the computer. However, you need CompactFlash card (CF card) for this method, and also, you need to write the firmware data into the CF card beforehand. Moreover, when you set PIT3, you must connect the printer to the computer.
Using BIN file is recommended when you update firmware of several printers at once.

Things to prepare (Addition to the "Things to prepare" of BLF file)

<Hardware-related>

(1) 1 CompactFlash card (some computer requires other equipment such as PCMCIA card to connect the CF card into it.)

<Software-related>

(2) Firmware : LZ0173_$.BIN (Main firmware) *5

*5

LZ0173_$.BIN	*$ = Indicates the revision of the firmware* *Ex) LZ0173_A.BIN = Main firmware of HL-6050/D/DN (Version A)*

Procedures

(1) Download the necessary firmware from "ROM/Firmware DB", then copy it to the "AML" folder created in C drive.

(2) Extract this firmware and change the BIN file name as "HL-6050".

(3) Insert the CF card to your computer.

NOTE:

If the CF card is unformatted, format it. To format the CF card with the computer, do it from Explorer.

NOTE:

To format the CF card with the printer, plug the CF card to the printer while the power is off, then turn on the printer. Select [SETUP]-[DELETE STORAGE]-[FORMAT(CF)] with the control panel, then press the SET key. Press the SET key again when [OK?] message appears.

[PROGRAMING-WAIT] appears followed by [DELETE STORAGE]. [DELETE STORAGE] indicates that the formatting finished, therefore, turn the printer off and take out the CF card.

(4) View the CF card from Explorer of your computer.

(5) Create a folder,

\PRTCFG\SYS\BIN\HL-6050\12355 (Main + Network firmware)

\PRTCFG\SYS\BIN\HL-6050\12360 (Main firmware)

(6) Copy the "HL-6050" of Step (2) into the above file.

(7) Take out the CF card from the computer.

NOTE:

The consistency of the printer and data to rewrite with the following procedure is not confirmed. Therefore, make sure to check the data written in the CF card and the printer model before performing the following procedures.

(8) Turn the printer off, then insert the CF card into the printer.

(9) Turn the printer on. The printer automatically moves to the rewriting mode and starts rewriting.

While rewriting the firmware, LCD blacks out and “DATA LED” blinks. Be sure NOT to take out the CF card, or turn the printer off until it reaches to the condition of step (9). Rewriting may be impossible once the writing procedure fails.

(10) When rewriting finishes, [….Complete….] appears on LCD. Turn OFF the printer, then take out the CF card from the printer.

4. Network firmware (NC-6100h, NC-7100w) (BLF file)

Things to prepare (Addition to the "Things to prepare" of BLF file)

<Software-related>

(1) Firmware : 61_$$$.BLF (Firmware for NC-6100h)

71_$$$.BLF (Firmware for NC-7100w) *6

Download the firmware you are using.

**6*

61_$$$.BLF	*$$$ = Indicates the version* *Ex) 61_$$$.BLF = Firmware of NC-6100h (Version 1.01)*
71_$$$.BLF	*$$$ = Indicates the version* *Ex) 71_$$$.BLF = Firmware of NC-7100w (Version 1.01)*

Download and extract the necessary firmware from "ROM/Firmware DB", then copy it to the "AML" folder created in C drive.

(1) Connect the USB cable to the printer. Turn on the printer while pressing **Go** and **Job Cancel** keys. (The USB serial number is fixed to "987654321".)

The LCD shows [SELF TEST] -> [RAM SIZE = 32MB] -> [Now Initializing] -> [LINETEST MODE] in this order. Keep pressing **Go** and **Job Cancel** keys until [LINE TEST MODE] appears and release the keys after confirming it.

The LCD shows [WARMING UP] -> [READY] in this order. Wait until [READY] is displayed.

(2) During the step (1), Plug and Play will run to install the USB driver of relevant model.

(3) Double click "FILEDG32", which is in the "AML" folder. Then, drug and drop the firmware (61_$$$.BLF or 71_$$$.BLF) to the printer icon in FILEDG32.

Data is sent to the printer via the USB cable, and start writing. While the data is sent to the printer, DATA LED blinks and when firmware rewriting starts, LED display changes.

Even if transfer command is completed, the data is still transmitted or the rewriting procedure continues. Therefore, be sure **NOT** to shut down the Windows system, turn the printer off, unplug the cable and turn the computer off until it reaches to the condition of step (4). Re-writing may be impossible once the writing procedure fails.

(4) After the rewriting finishes, the printer will be rebooted. Wait until Status LED of the printer turns on in green. After rebooting, Copy2 icon of the printer is created in a printer folder. To avoid unnecessary mistake, delete the icon.

9. NVRAM BACKUP

The following two methods can be used to copy the whole NVRAM with CompactFlash:

1. Write in NVRAM to CompactFlash
2. Write back NVRAM from CompactFlash

1. To write in NVRAM to CompactFlash:
   1. Turn off the power.
   2. Insert the CompactFlash into the printer slot.
   3. Turn on the power while pressing the “Go” and “-“ keys.
   4. Keep pressing down the “Go” and “-“ keys until “Complete” appears on the LCD display.
   5. If “Complete” appears, release the “Go” and “-“ keys. NVRAM is now successfully copied.

2. To write back NVRAM from CompactFlash:
   1. Turn off the power.
   2. Insert the CompactFlash into the printer slot.
   3. Turn on the power without pressing any keys.
   4. The “SELF TEST” appears on the LCD, followed by “Now initializing”.
   5. If “Complete” appears, NVRAM is successfully copied.

NOTE

1) If the serial number information written in the CompactFlash and the printer’s serial number are different, the NVRAM will not be written in the printer.
2) Once the NVRAM is written back from CompactFlash, the data on the CompactFlash will be eliminated automatically.

APPENDIX 1. MAIN PCB CIRCUIT DIAGRAM, HL-6050 (1/6)

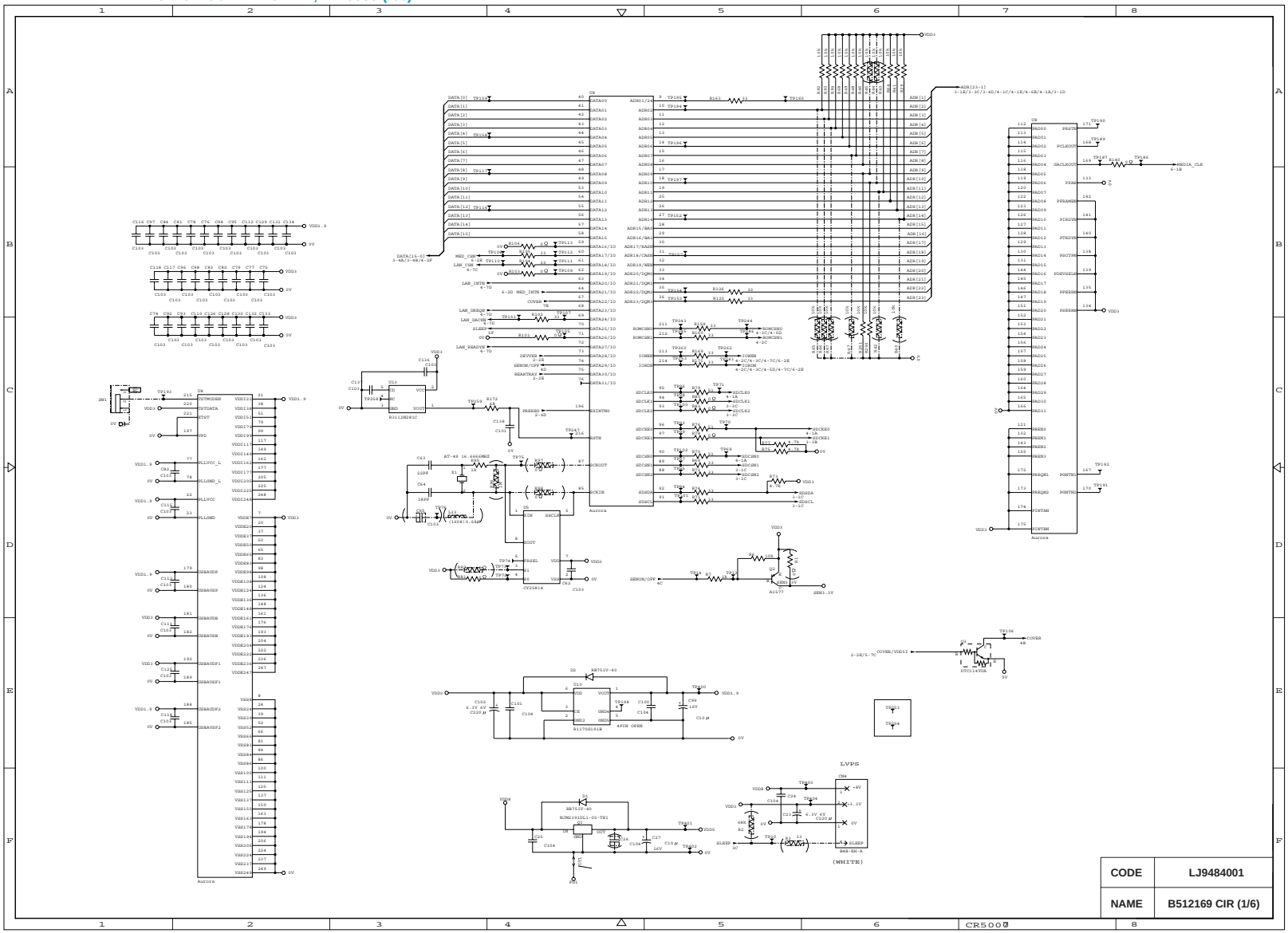

APPENDIX 2. MAIN PCB CIRCUIT DIAGRAM, HL-6050 (2/6)

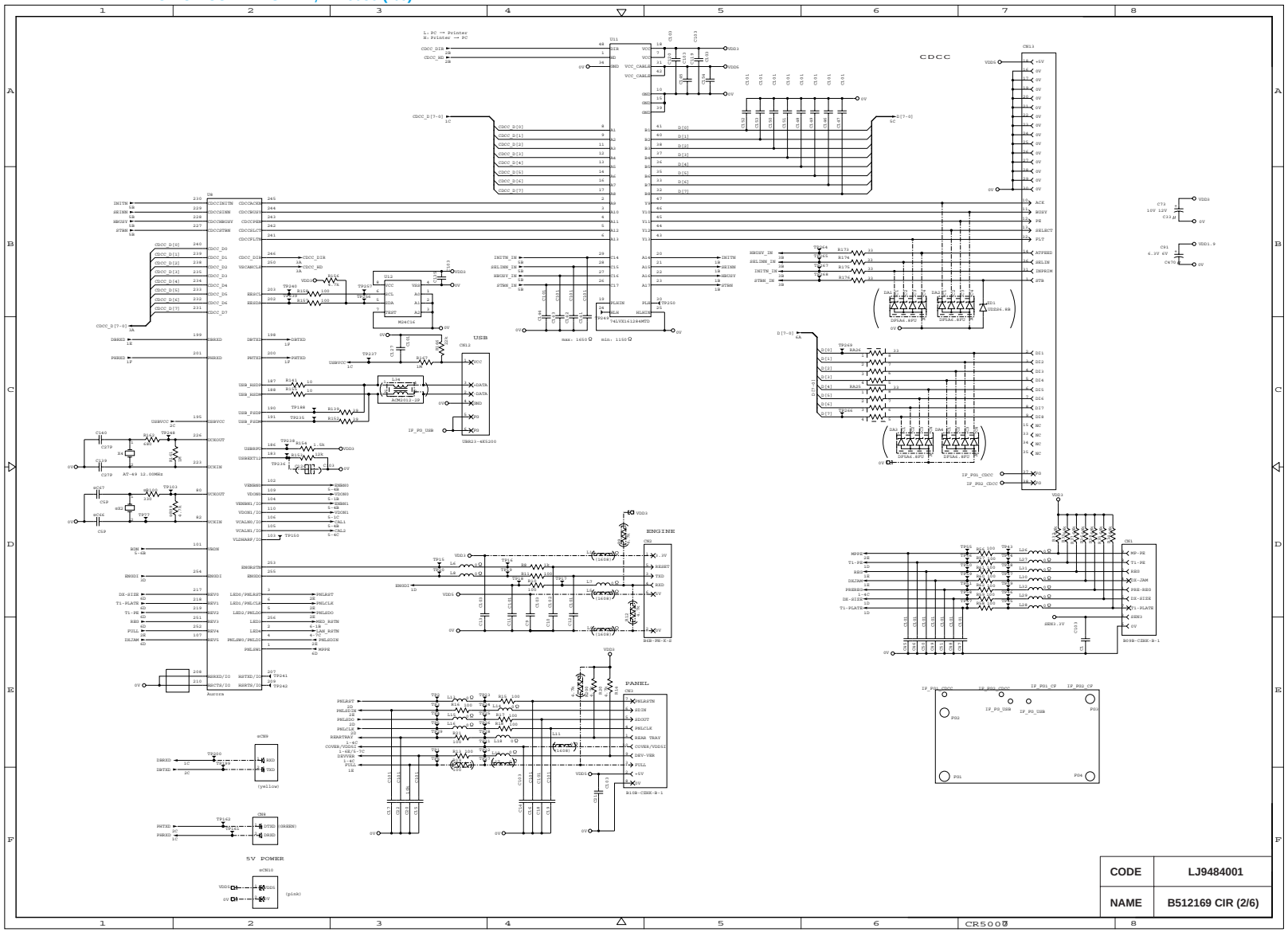

APPENDIX 3. MAIN PCB CIRCUIT DIAGRAM, HL-6050 (3/6)

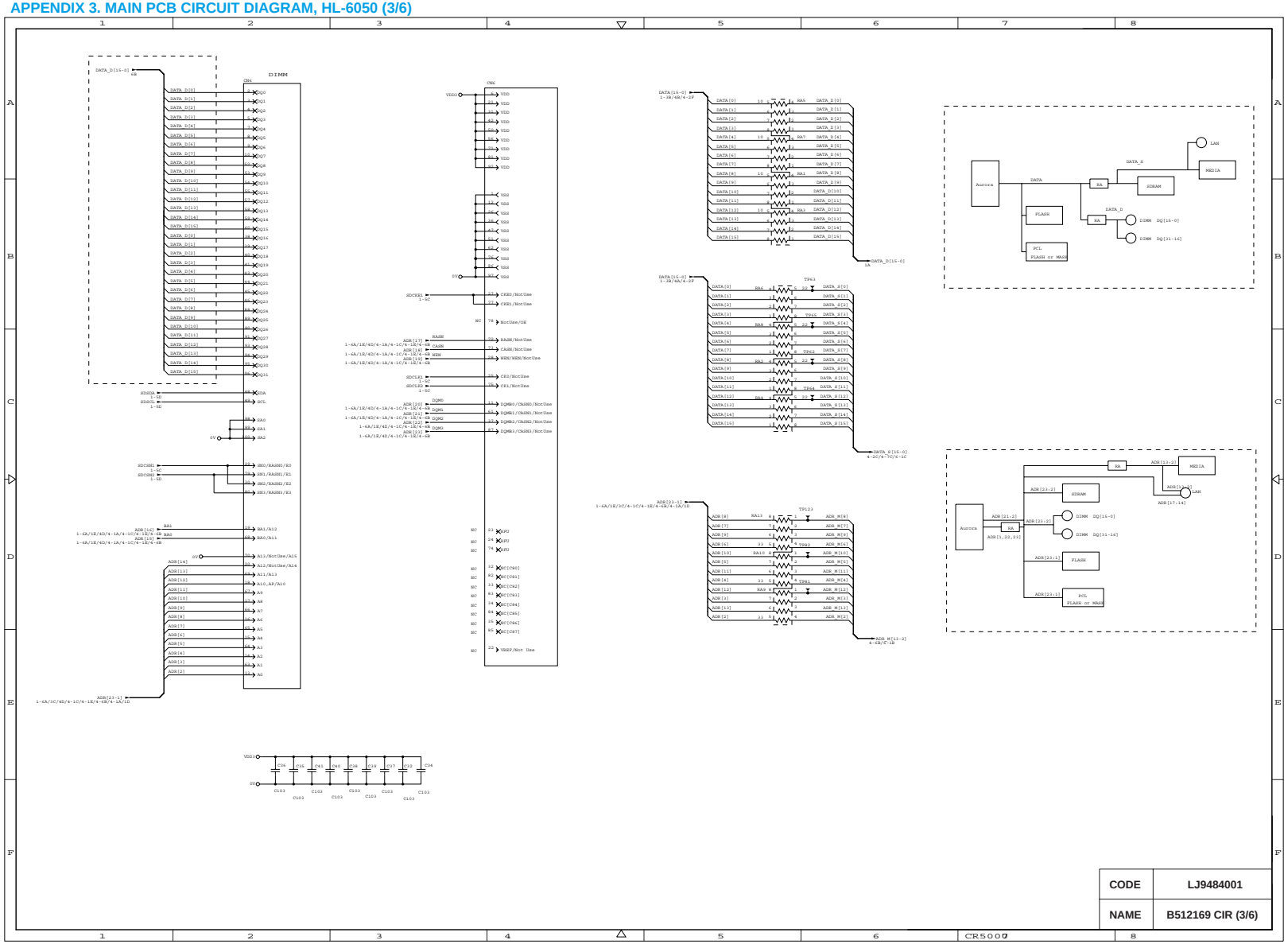

APPENDIX 4. MAIN PCB CIRCUIT DIAGRAM, HL-6050 (4/6)

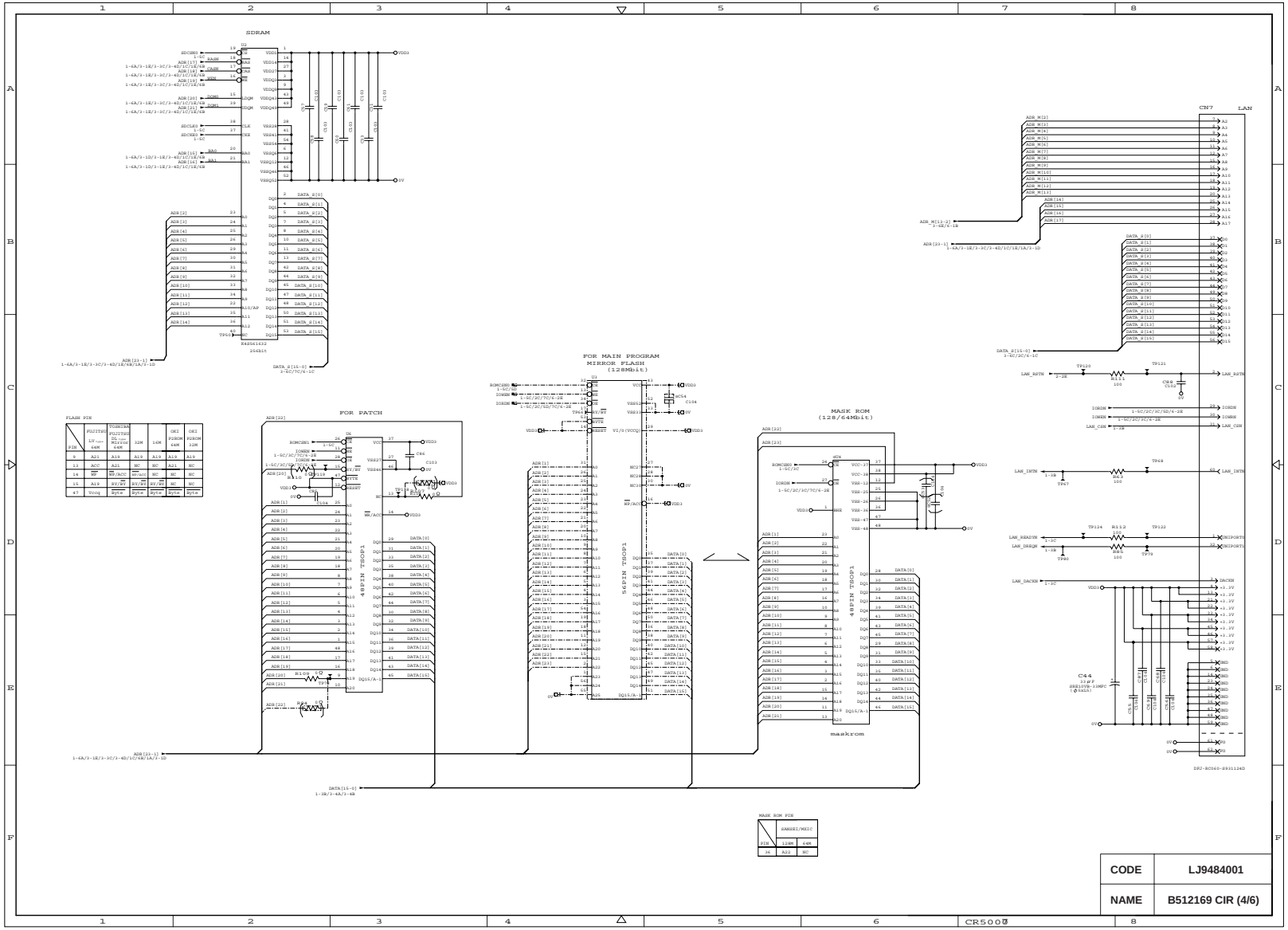

APPENDIX 5. MAIN PCB CIRCUIT DIAGRAM, HL-6050 (5/6)

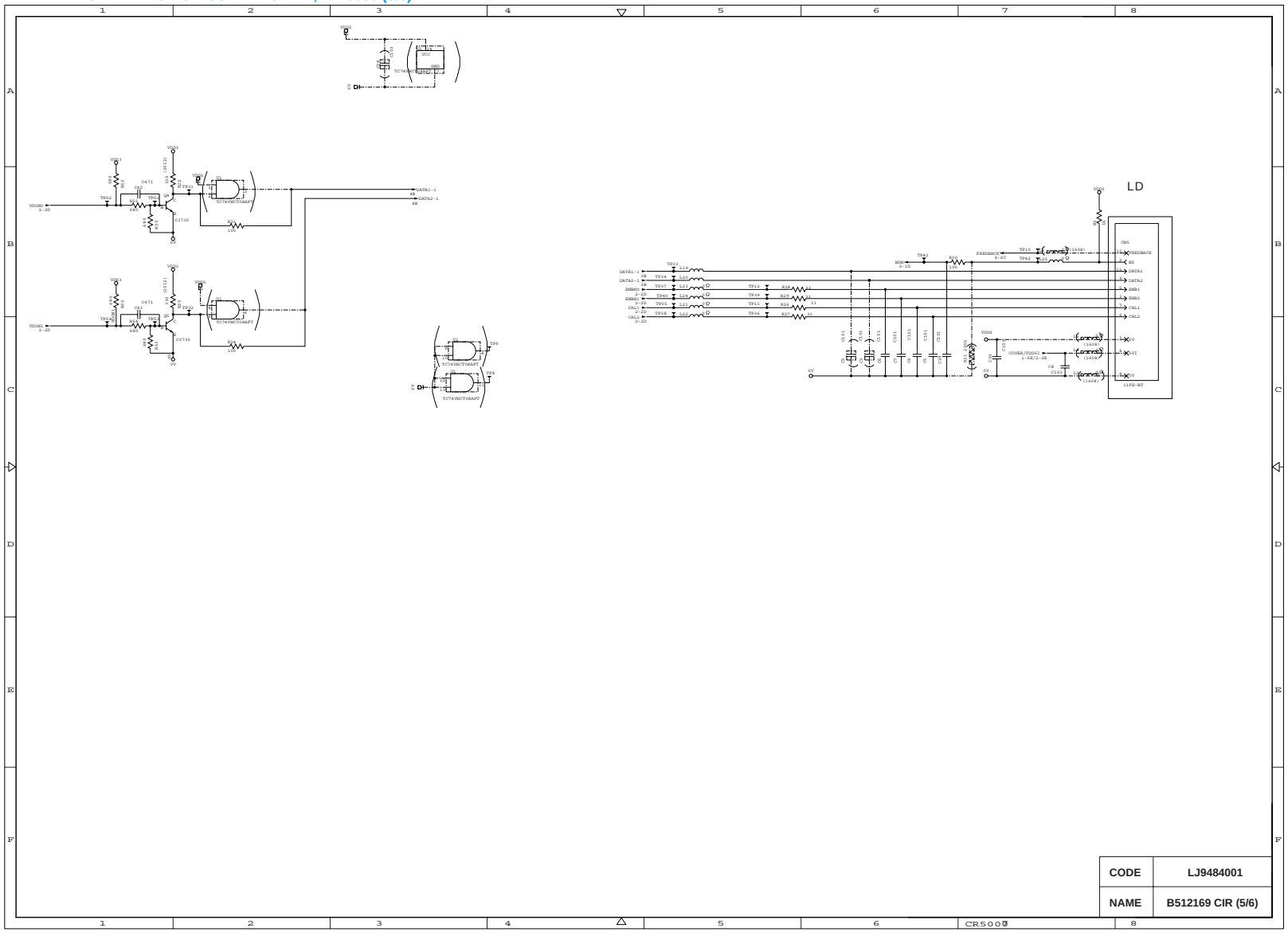

A - 5

APPENDIX 6. MAIN PCB CIRCUIT DIAGRAM, HL-6050 (6/6)

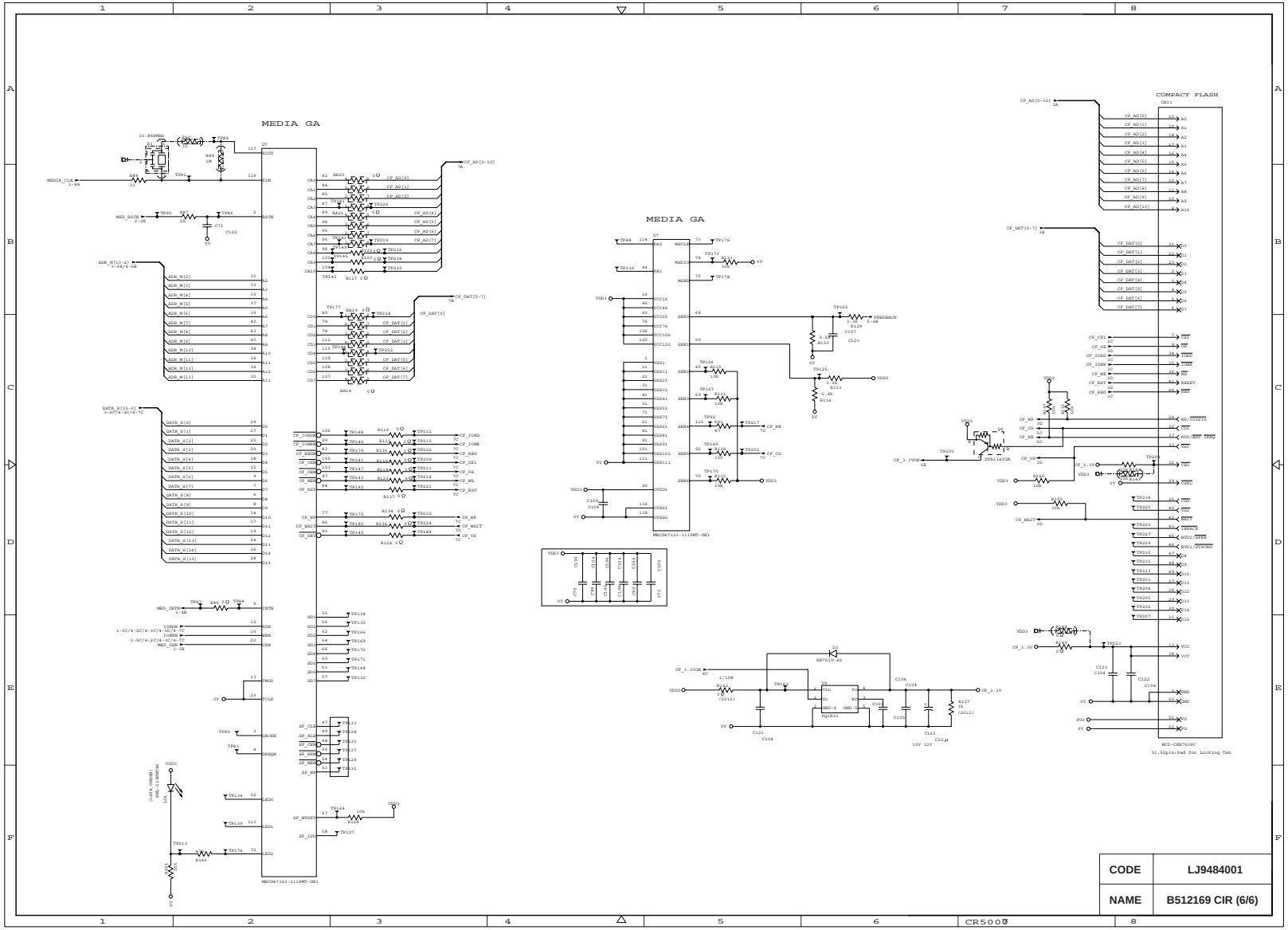

A - 6

APPENDIX 7. BLOCK DIAGRAM, HL-6050

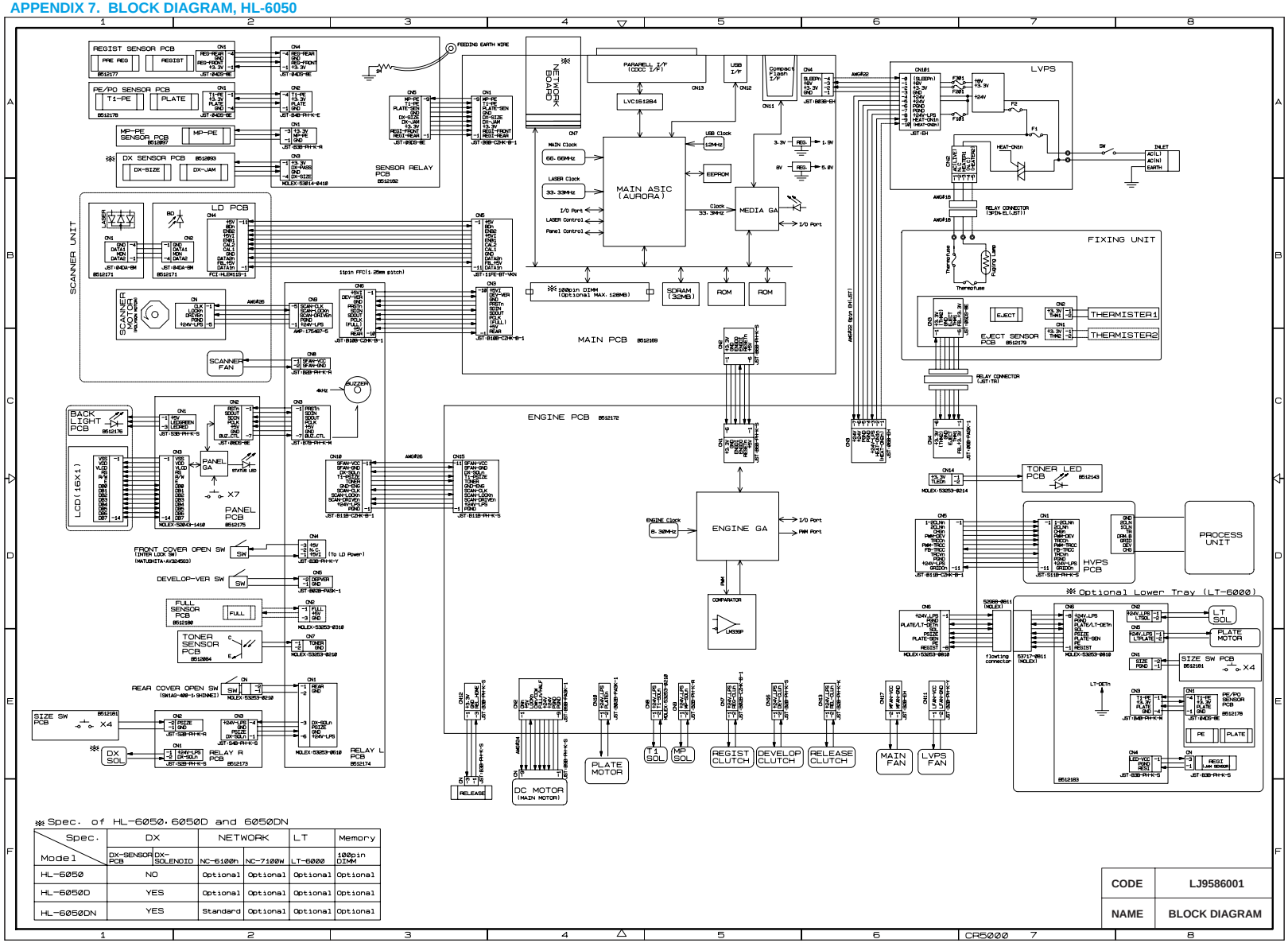

※Spec. of HL-6050, 6050D and 6050DN

Spec. / Model	DX		NETWORK		LT	Memory
	DX-SENSOR PCB	DX-SOLENOID	NC-6100n	NC-7100W	LT-6000	100pin DIMM
HL-6050	NO		Optional	Optional	Optional	Optional
HL-6050D	YES		Optional	Optional	Optional	Optional
HL-6050DN	YES		Standard	Optional	Optional	Optional

CODE	LJ9586001
NAME	BLOCK DIAGRAM

A-7

APPENDIX 8. LOW-VOLTAGE POWER SUPPLY CIRCUIT DIAGRAM (100V), HL-6050

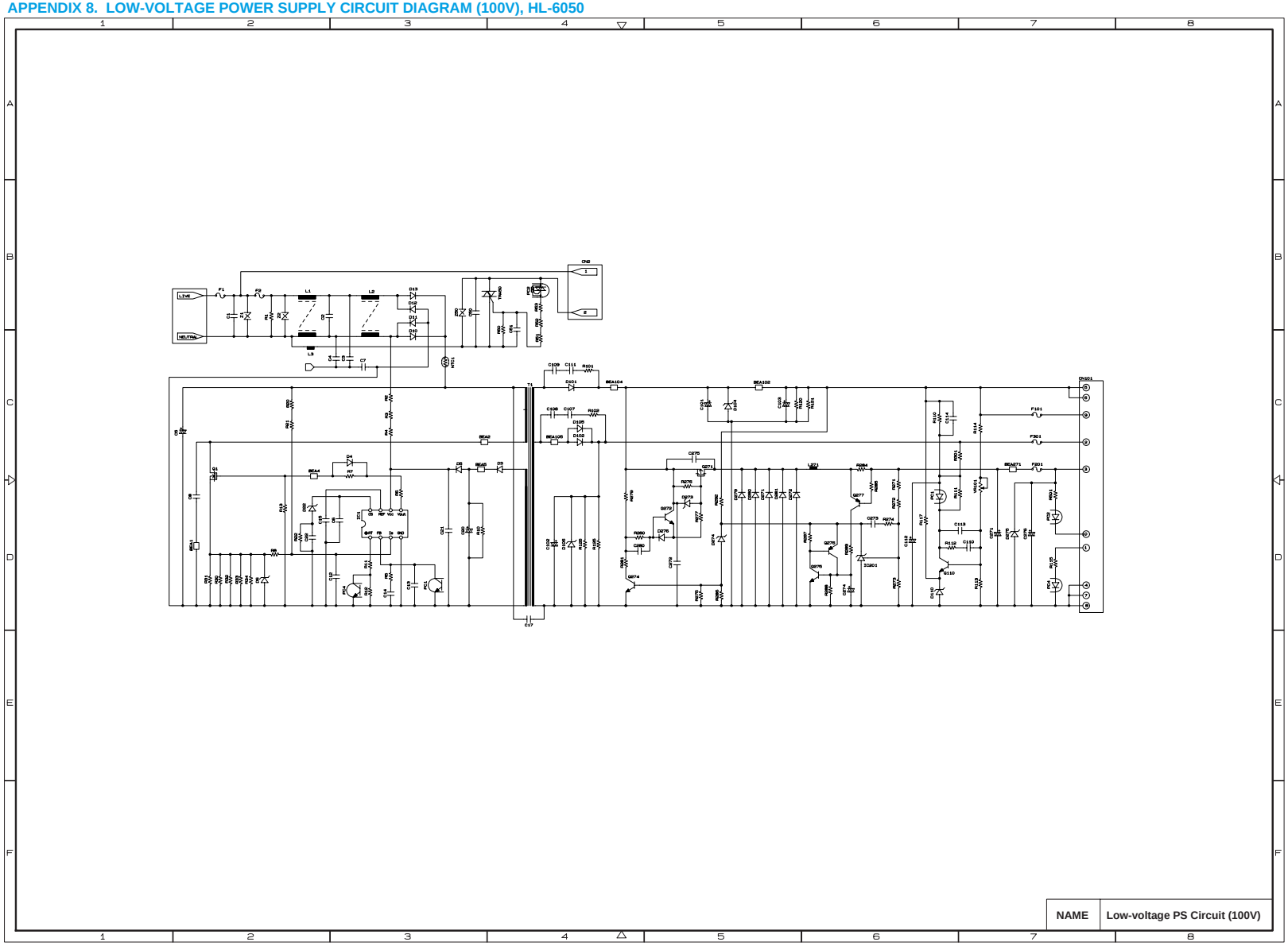

A - 8

APPENDIX 9. LOW-VOLTAGE POWER SUPPLY CIRCUIT DIAGRAM (200V), HL-6050

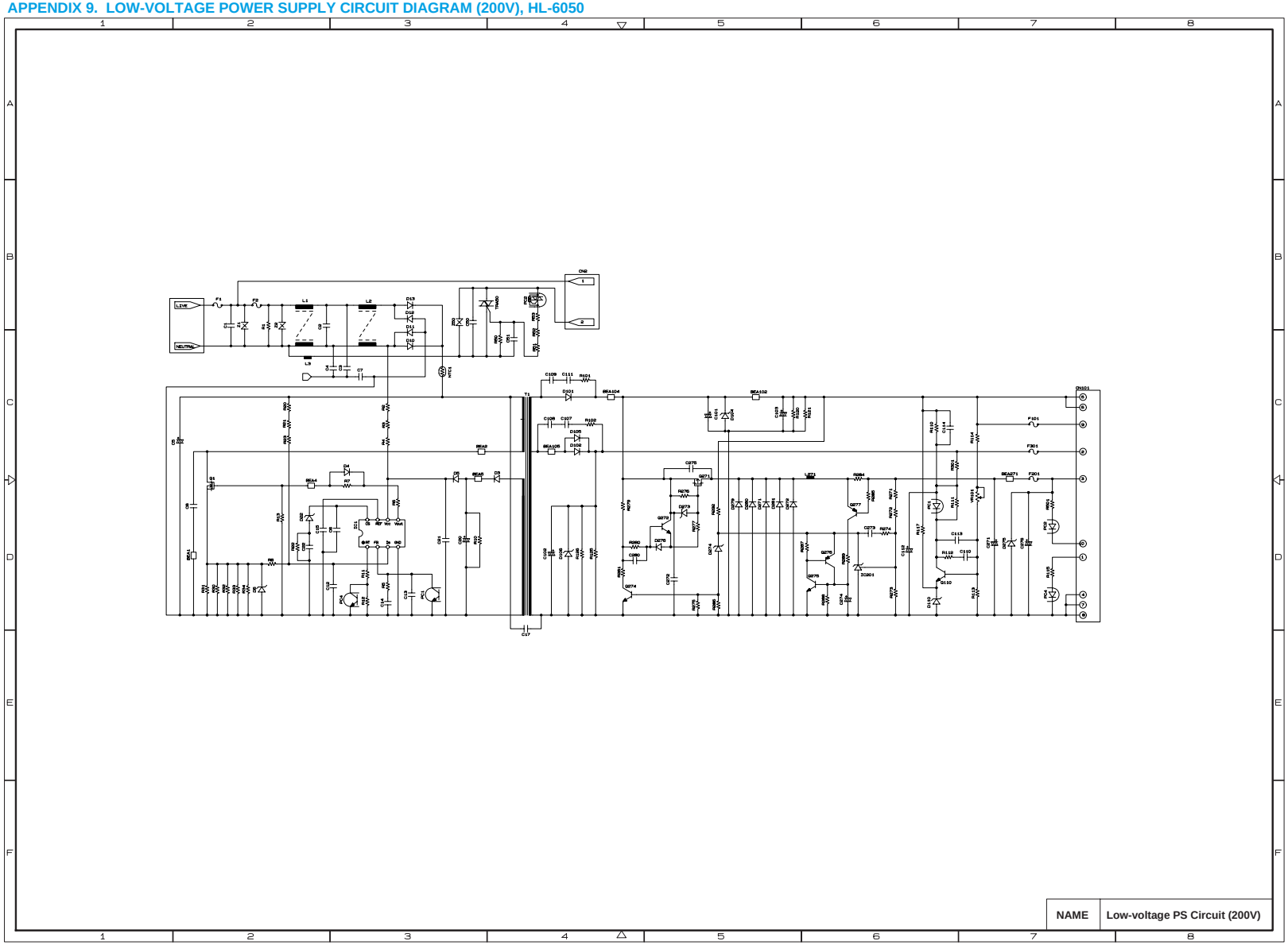

A - 9

APPENDIX 10. HIGH-VOLTAGE POWER SUPPLY CIRCUIT DIAGRAM, HL-6050

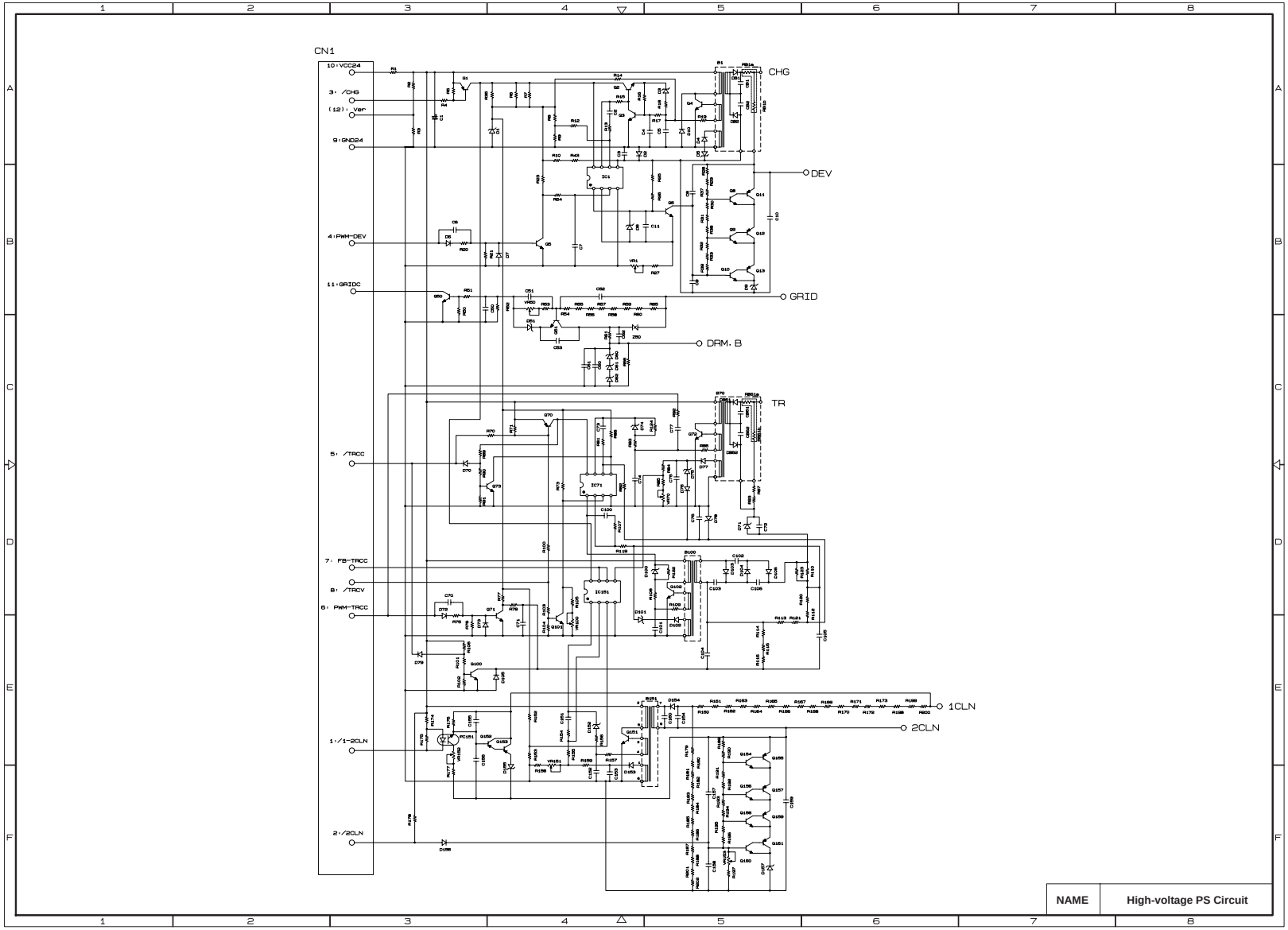

A - 10

APPENDIX 11. ENGINE PCB CIRCUIT DIAGRAM, HL-6050 (1/2)

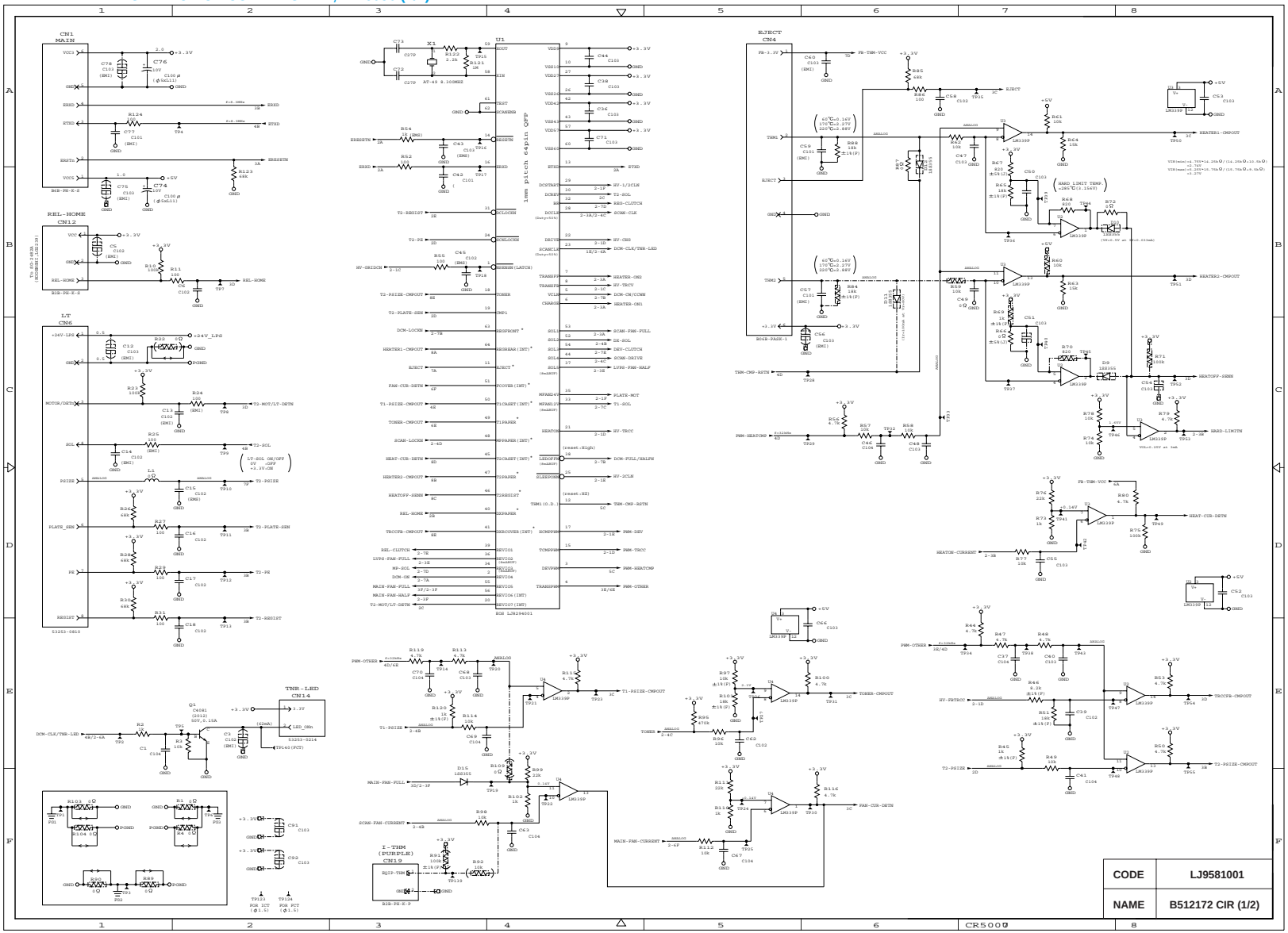

A - 11

APPENDIX 12. ENGINE PCB CIRCUIT DIAGRAM, HL-6050 (2/2)

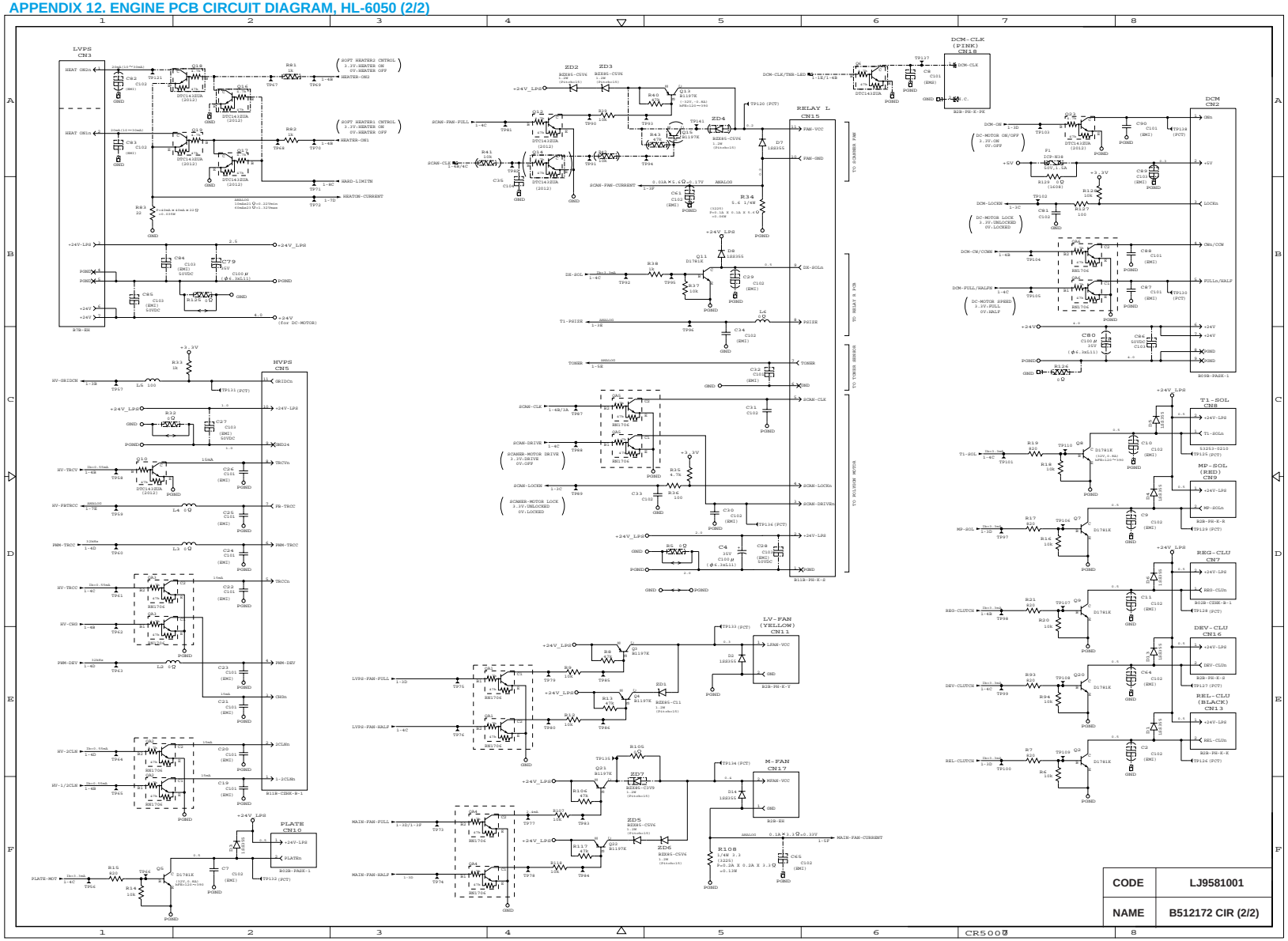

APPENDIX 13. SETUP BY COUNTRY (PJL FILE)

Working contents

(1) Setup by country (PJL file).

(2) Setting the serial number.

Things to prepare

(1) Computer (Windows® 98, 2000, XP)

Create a folder “AML” in C drive.

(2) 1 HL-6050/6050D/6050DN printer

(3) 1 USB cable

(4) Download utility (FILEDG32.EXE)

(5) Serial No. setting tool (BrUsbSn.zip)

(6) PJL files for setup by country (HL-6050.zip)

How to setup

(1) Make sure that the firmware rewriting is completed properly after replacing the Main PCB by following the steps on Chapter 7 “8. HOW TO REWRITE HL-6050/6050D/6050DN FLASH ROM”.

(2) Connect the USB cable to the printer. Turn on the printer while pressing Go and Job Cancel keys. (The USB serial number is fixed to “987654321”.)

(3) Double-click the “FILEDG.32.EXE” in the “AML” folder.

(4) Drug and drop the appropriate PJL file to the printer icon in FILEDG32.

(5) Double-click the “BrUsbSn.exe” in the “AML” folder.

(6) Select the port that is connected to the printer. And, select “Printer 2” including the appropriate model as the figure below.

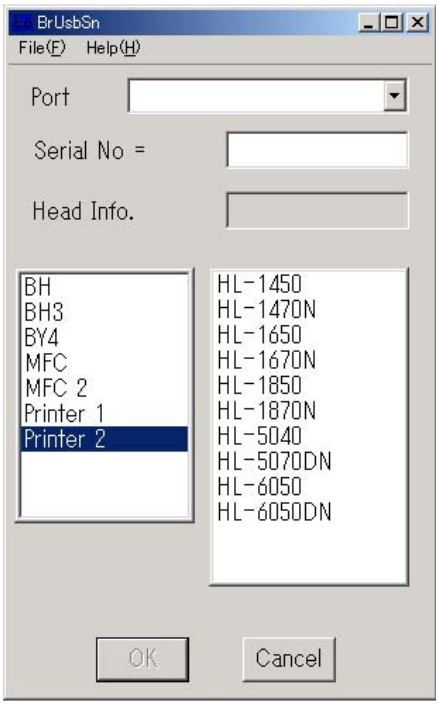

(7) Input the 9 digits serial number, then click the OK button.

(8) Print the “Print Settings” and make sure that the serial number and setup by country are correct.

PJL files to setup by country

Code	Country	HL-6050	HL-6050D/6050DN
00101	USA	---	HL-6050D_DN_00101xxx.pjl
00102	Canada	---	HL-6050D_DN_00102xxx.pjl
00103	Germany	HL-6050_00103xxx.pjl	HL-6050D_DN_00103xxx.pjl
00104	England	HL-6050_00104xxx.pjl	HL-6050D_DN_00104xxx.pjl
00106	Australia	HL-6050_00106xxx.pjl	HL-6050D_DN_00106xxx.pjl
00110	Switzerland	HL-6050_00110xxx.pjl	HL-6050D_DN_00110xxx.pjl
00112	Finland	HL-6050_00112xxx.pjl	HL-6050D_DN_00112xxx.pjl
00113	Denmark	HL-6050_00113xxx.pjl	HL-6050D_DN_00113xxx.pjl
00115	Spain	HL-6050_00115xxx.pjl	HL-6050D_DN_00115xxx.pjl
00116	Italy	HL-6050_00116xxx.pjl	HL-6050D_DN_00116xxx.pjl
00117	Israel	HL-6050_00117xxx.pjl	HL-6050D_DN_00117xxx.pjl
00124	South Africa	HL-6050_00124xxx.pjl	HL-6050D_DN_00124xxx.pjl
00126	Sweden	HL-6050_00126xxx.pjl	HL-6050D_DN_00126xxx.pjl
00143	GULF	HL-6050_00143xxx.pjl	HL-6050D_DN_00143xxx.pjl
00160	France / Belgium / Netherlands	HL-6050_00160xxx.pjl	HL-6050D_DN_00160xxx.pjl

NOTE: ”---” indicates “Not supported”.

APPENDIX 14. HOW TO CALCULATE THE DRUM UNIT LIFE

The number of drum rotations per one page printing is about 11 rotations.
(Page counter reduced by the number of drum rotations) =

(The number of drum rotations) ÷ 11

- The number of drum rotations per one page printing continuously = 2.5 rotations.
- The number of drum rotations while warming-up = 6 rotations

Example:

	The number of pages calculated from drum rotations	
	Cold start (page)	Hot start (page)
1 page/job	(6 + 11) / 11 = 1.55	11 / 11 = 1
2 pages/job	(6 + 11 + 2.5) / 11 = 1.77	(11 + 2.5) / 11 = 1.23
18 pages/job	(6 + 11 + 2.5 x 23) / 11 = 6.77	(11 + 2.5 x 23) / 11 = 6.23

If printing 1 page per job with cold start, the drum unit life is decreased earlier.